REV	02
Data	Feb 2024
Supersedes	D-SSMAC01802-23_01EN

Service Manual

Startup Guide
EWAT-B-C
EWFT-B-C
EWAT-M-C

Original instructions

Contents

1 Technician Qualifications ... 3
2 Required Tools and Supplies ... 3
3 Collaboration and Responsibilities ... 4
4 Before Arriving at Jobsite ... 4
5 Upon Arrival at Jobsite ... 4
6 Pre-Power On Checks ... 5
6.1 Visual Inspection ... 5
6.2 Leak Test ... 5
6.3 Water Piping System Check ... 5
6.4 Water Flow ... 5
6.4.1 On-Off Control ... 6
6.4.2 Fixed speed control ... 6
6.4.3 VPF and DT control ... 6
6.5 Electric Connections Check ... 7
7 Pre-Startup Checks ... 7
7.1 Voltage Check ... 8
7.2 Flow Switches ... 8
7.3 Control Settings ... 8
7.3.1 Unit Configuration ... 8
7.3.2 Circuit Configuration ... 9
7.3.3 Options Configuration Controller ... 10
7.3.4 Software Options ... 12
7.4 Alarm Limits ... 13
7.5 Energy Meter ... 13
7.5.1 IME – Nemo D4-Le MFD4421 ... 13
7.5.2 FRER - NanoH ... 16
7.6 Pre-Running Adjustments ... 17
7.6.1 Check and calibration of unit temperature sensors ... 17
7.6.2 Check and calibration of circuit temperature sensors ... 18
7.7 Dry Tests ... 19
7.7.1 Unit Alarm ... 19
7.7.2 Pump #1/#2 ... 19
7.7.3 Fan ... 19
7.7.4 Sub-Cooler solenoid (Opt. 01-03A) ... 20
7.7.5 Compressor Heaters ... 20
7.7.6 High Pressure Switches Test ... 20
7.7.7 Expansion Valve ... 21
7.7.8 Compressor ... 21
7.7.9 FC Water valve (Only EWFT units) ... 22
8 Start-Up ... 26
8.1 Running Adjustments ... 26
8.1.1 Check and calibration of pressure transducers ... 26
8.1.2 Subcooling measurement point ... 27
8.2 Running Safeties Test ... 27
8.2.1 Flow Switches ... 27
8.3 Data acquisition ... 28
8.3.1 EWAT-B-C EWFT-B EWAT-M-C units ... 28
8.3.2 Only for EWFT-B-C units (2nd release) ... 28
9 TABLES ... 29
9.1 Layout ... 29
Table A – Unit Layout ... 29
9.2 Unit Configuration ... 30
Table B - Unit composition for EWAT XXX B Efficiency Class S (All the Efficiency Class R units are equipped with inverter fans) ... 30
Table C Unit composition for EWAT XXX B Efficiency Class X (All the Efficiency Class R units are equipped with on/off fans) ... 31
Table D – Unit composition for EWFT XXX B Efficiency Class S (All the units are equipped with inverter fans) 32
Table E – Unit composition for EWFT XXX B Efficiency Class X (All the units are equipped with inverter fans) 33
Table F – Unit composition for EWFT XXX M ... 34
Table G – Nominal RPM ... 34
Table H: Max Rpm EWAT-B-C Unit ... 34
Table I: Max Rpm unit DAME - EWAT-M-C ... 34
Table L: Max Rpm Freecooling unit EWFT-B-C ... 35
Table M: Pump models R32 Serie for EWAT-B-C and EWFT-B-C Silver Units ... 36
Table N: Pump models R32 Serie for EWAT-B-C and EWFT-B-C GOLD Units ... 37
Table O: Crossed reference Pump Model – Pump Type ... 38

9.3 Pump VFD Settings 39
Table P – Pump inverter settings 39
9.4 Pre-Commissioning Sheet 40
Table Q – Pre commissioning sheet..... 40
9.5 Commissioning sheet..... 41
Table R – Commissioning sheet..... 41

LIST OF TABLES

Table A - Unit Layout 25
Table B/C/D/E/F Unit composition..... 26-28
Table G – Nomina RPM 28
Table H/I –Max RPM unit 28-29
Table L - Max Rpm Freecooling unit……..33
Table M/N – Pump Models..... 29-30
Table O – Crossed Refernece Pump Model..... 31
Table P – Pump Inverter Settings 32
Table Q – Pre-Commissioning Sheet..... 33
Table R – Commissioning Sheet..... 34

1 Technician Qualifications

Initial startup on Daikin chillers must be performed only by Daikin Service Technicians or Authorized Service Providers. The contents of this manual are not intended as a substitute for professional skills training, or knowledge and practice of industry standards. Additional literature will be required that is product and component specific, including: product Installation Manuals, Service Bulletins, selection data, system control and piping specifications, etc. (see List of References on *Paragraph 2* for a list of some supplemental items).

The following information is intended only as a guide for authorized personnel with a sound basic knowledge of HVAC equipment, mechanical systems, electrical wiring, controls, & microprocessors. Attempts by untrained or unauthorized persons to start, operate and service this equipment can result in equipment failure, personal injury, or death, as well as invalidation of product warranty. It is the responsibility of the technician to ensure that proper safety equipment safe practices are used.

Be sure that before beginning any work, the Startup Service Technician has reviewed and is thoroughly familiar with all Daikin Factory Service Safety Policies and Procedures and has reviewed any Service Bulletins or Rapid News regarding this product.

2 Required Tools and Supplies

In addition to standard tools needed on most service jobs, be sure to bring the following items to the jobsite for Startup:

- ☑ Personal Protective Equipment (Safety)
- ☑ Commissioning Sheet
- ☑ Chiller Technical Data, Selection Sheet, and Certified Submittal Drawings
- ☑ Manuals:

  Note: Be sure that all manuals are the current revision appropriate for this unit.
  - This Manual: Start-up Guide – EWAT-B-C EWFT-B-C EWAT-M-C
  - Installation, Operation and Maintenance Manual D-EIMAC01802-23_01EN
  - Control Manual: D-EOMAC01801-23_01EN)
  - EWAT-B P&ID (last revision)
  - Wiring Diagram (paper copy in electrical panel)
- ☑ Other technical reference material as necessary
- ☑ Current operating software official version downloaded and ready to install if needed:

  ARES 1.00.A (refer to DAE Software Repository)
- ☑ Miscellaneous gauges and hand tools, including:
  - Electronic Leak Detector

- Differential Pressure Gauge (*adequate for system pressures)*
- Phase Rotation Meter
- Refrigeration Gauge Manifold (*Range: 50bar, Accuracy: ±0.5% of Final Value, resolution: 0.01bar/0.1psi/1kPa*)
- Digital thermometer (*Range: -50°C/+150°C, Accuracy: ±0.1°C, Resolution: 0.1°C*)
- Amp probe
- Voltmeters
- Recover refrigerant cylinder (*for eventual charge adjustments*)
- Full refrigerant cylinder *(for eventual charge adjustments)*
- Recovery pump (*for eventual charge adjustments*)
- Siemens Remote Interface POL 895 (CE+, CE- connection)

3 Collaboration and Responsibilities

Throughout the installation and startup process, members of the Daikin Service Department (Supervisor / Coordinator / Technician) must establish contact and meet regularly with the following persons and/or their designated representatives:

- Mechanical, Electrical, and Controls Contractors
- Installing Contractor
- Daikin Sales Department
- Customer/Owner
- Personnel to be trained in unit operation

It is the responsibility of the Daikin Service Representative to ensure that all items on the *Pre-Power On Checklist* are complete and the system is ready for start-up. Upon arrival at the jobsite, the DAIKIN Service technician will verify that all items on the *Pre-Power On Checklist* are complete.
The Chiller Start-up Technician must confirm that the unit installation conforms to Daikin specifications and requirements. This includes mounting and support, piping, electrical and control installations related to the unit. These items must, as a minimum, meet acceptable industry standards and Daikin published requirements. All factory supplied controls and valves must be set and, where required, calibrated. Electrical power and control wiring must be selected and sized as specified by Daikin and the applicable electrical code.
The various contractors associated with the installation have the responsibility to provide the following items (as noted on the Pre-Start Checklist), in accordance with the product IOM, applicable codes and acceptable practices for the trade involved. Note any discrepancies on Commissioning Sheet and notify Supervisor as appropriate. Ensure that access to appropriate systems is available for startup operations.

4 Before Arriving at Jobsite

- Review and Verify Pre-Commissioning Sheet received from the Installer/Customer (*Table Q*) Company/Contractor.
- Review Required Materials List on (refer to paragraph 2) and gather necessary items.
- Review Unit Design Specifications.
- Review Unit Selection Sheet.
- Review Startup Guide and Commissioning Form.
- Review IOM.
- Review Control Manual.
- Establish estimated timeline and milestones for Startup.

5 Upon Arrival at Jobsite

Meet with Mechanical, Electrical, and Control Contractors to discuss Startup Process and identify any potential issues that may interfere with a successful startup.

Be sure to meet with the Controls Contractor to discuss and clarify the chiller control sequence and settings for the chiller, towers, pumps, BAS integration, etc…

6 Pre-Power On Checks

Initial Chiller Inspection has to be performed according to the ***Pre-Power On Checklist*** of the Commissioning Sheet by following the instruction below shown.

Verify that all the items are correct. If the system is not ready and/or items on the Pre-Power On Checklist are incomplete, the technician should immediately notify his supervisor and request direction on how to proceed. A separate work order authorization may be required.

6.1 Visual Inspection

- Inspect the chiller for shipping/installation damage including fans and internal parts of condenser.
- Verify that chiller is adequately located, and level mounted as per the IOM (***Paragraph 4.3***) according to the minimum space requirements (***Paragraph 4.4***)
- Verify that appropriate anti vibration pads are installed.
- Visually inspect for oil and refrigerant leaks.
- Record component model and serial numbers as appropriate on Commissioning Form.
- Clean the chiller from any foreign debris and surrounding area.

Note any issues in the Commissioning Form (***Pre-Startup Comments***)

6.2 Leak Test

Before to start with Leak Test, verify that during stock period (from Delivery Date), leak tests have been performed periodically as per local FGas Regulation. Collect all leak test reports for recording purpose.

Connect service gauges. Confirm pressure in the condenser and evaporator, to verify that charge was not leaked during storage/shipping. Using Electronic Leak Detector, leak check entire unit. Be sure to note any leaks found and repairs performed on the Commissioning Sheet. Follow all applicable industry and regulatory authority standards. If refrigerant loss is catastrophic, startup may need to be postponed until appropriate warranty leak repairs are completed.

Note any issues in the Commissioning Form (***Pre-Startup Comments***)

6.3 Water Piping System Check

- Verify water piping as per IOM (***Paragraph 4.6.1***).
  Recommended Water filter Mesh:
  - 1.0mm for BPHE Evaporator
  - 0.87mm for DX S& T Evaporator
  - 1.2mm for Flooded Evaporator

  The water filter must be installed as close as possible to the chiller. Missing filter results withdraw of heat-exchangers warranty.
- Verify if proper glycol percentage for the application in accordance with Daikin specifications is present as per IOM (**Paragraph 4.8.2**)
- Walk length of piping system (in equipment area). Ensure that connections are correctly installed, and piping is properly supported (i.e., not supported by the chiller). Flanges must not be stressed.
- Check evaporator piping for proper flow direction through vessels by consulting Dimensional Drawing. If flow is incorrect, notify Mechanical Contractor, Service Supervisor, and Sales Rep.
- Verify that water pressure gauges are installed at proper locations.
- Confirm that all piping specialties (expansion tank, make-up, relief, vents, etc), water pumps are properly installed.

Note any issues in the Commissioning Form (***Pre-Startup Comments***)

6.4 Water Flow

Use Differential Pressure Gauge at the inlet/outlet nozzles of the unit connections to measure the pressure drop across the exchanger/exchangers.

Compare actual flow with Pressure Drop specified on the Unit Selection Sheet. Verify that actual flow is in line with the selection data.

If the measured flow isn't in line with the selection data, then refer to the CSS (Chiller Selection Software) for the verification of allowability of the measured water flow.

If flow is outside of acceptable margins, corrective action is required. If flow is too high, valves may be adjusted to trim flow. If flow is too low, notify Installing Contractor, and note on the Commissioning Form. If flow is different from the selection data, notify Service Supervisor and Sales Rep. Correction may be required prior to startup.
Note any issues in the Commissioning Form (***Pre-Startup Comments***)

6.4.1 On-Off Control

Use Differential Pressure Gauge at the inlet/outlet nozzles of the unit connections to measure the pressure drop across the exchanger/exchangers.

Unit Mode → Test

Commission unit → Manual Control → Unit → Pump #

Compare current flow with Pressure Drop specified on the Chiller Selection Sheet. Verify that actual flow is in line with the selection data.
If flow is outside of acceptable margins, corrective action is required:

- If flow is too high, valves may be adjusted to trim flow.
- If flow is too low, notify Installing Contractor, and note on the Commissioning Form. If flow is different from the selection data, notify Service Supervisor and Sales Rep. Correction may be required prior to startup.

Disable the pump when the correct speed is found: *Pump 1 > Off*

6.4.2 Fixed speed control

Note: *The following procedure is not necessary in case of DT and VPF control*

Use Differential Pressure Gauge at the inlet/outlet nozzles of the unit connections to measure the pressure drop across the exchanger/exchangers.

Unit Mode → Test

Commission unit → Manual Control → Unit → Pump #

- Set *Pump 1 > On* to enable the Pump 1
- Fine tune the % speed to get Pressure Drop specified on the Chiller Selection Sheet
- Disable the pump when the correct speed is found: *Pump 1 > Off*

Go back to main menu to set the fixed speed value for the pump in running condition:

View/Set Unit → Pumps → Speed #1/#2

6.4.3 VPF and DT control

Verify the Pump Mode settings in the menu.

View/Set Unit → Pumps

For more information and settings about the Variable Primary Flow, refer to servicesupport@daikinapplied.eu

6.5 Electric Connections Check

- Verify the Electric connections, Cable requirements, Interconnection cables and Phase unbalance as per IOM (***Paragraph 5***)
- Verify the proper electrical phasing U-V-W of the loads (fans, compressors, and pumps) for L1, L2 and L3 respectively.
- Verify Field wiring correctness according to the unit wiring diagram.

Field Wiring Connection

Type Signal description	Function	Page / column		Symbol
Analogic Input	DEMAND LIMIT OR CURRENT LIMIT ENABLE 4 to 20mA	29	4	-MC24 -MC24 888(+) 889(-)
Analogic Input	LWT RESET SET POINT OVERRIDE 4 to 20mA	29	1	-MC24 -MC24 890(+) 886(-)
Analogic Output	HEAT RECOVERY 3 WAY VALVE 4 to 20mA	30	4	-MC24 -MC24 881(+) 882(-)
Analogic input	iCM COMMON CHILLED WATER TEMP NTC10K or PT1000 probe	30	1	-MC24 895 891 -MC24
Digital Input	UNIT START/STOP REMOTE	26	5	-MC230 541 540 -MC230
Digital Input	EXTERNAL ALARM Remove jumper	26	2	-MC24 721 724 -MC24
Digital Input	DOUBLE SPEED PUMP SWITCH	26	3	-MC24 703 726 -MC24
Digital Input	DOUBLE SET POINT	26	4	-MC24 703 728 -MC24
Digital Input	LOCAL OR NETWORK SWITCH Remove jumper	31	3	-MC24 803 802 -MC24
Digital Input	WCH FLOW SWITCH	29	2	13 14
Digital Output	UNIT ALARM Max Load 2A-230Vac External power supply	27	7	-MC230 524 525 -MC230
Digital Output	CONTROL EVAPORATOR WATER PUMP 1 Max Load 2A-230Vac External power supply	27	2	-MC230 527 528 -MC230

Type Signal description	Function	Page / column		Symbol
Digital Output	CONTROL EVAPORATOR WATER PUMP 2 Max Load 2A-230Vac External power supply	27	4	-MC230 530 531 -MC230
Digital Output	READY TO START Max Load 2A-230Vac External power supply	28	1	-MC230 594 595 -MC230
Digital Output	UNIT RUNNING Max Load 2A-230Vac External power supply	28	2	-MC230 594 596 -MC230
Digital output	CONTROL HEAT RECOVERY PUMP Max Load 2A-230Vac External power supply	32	1	-MC230 509 510 -MC230
Digital output	BYPASS VALVE Max Load 5A-230Vac External power supply	28	7	-MC230 -MC230 593 592 591 -MC230
Digital output	COMPRESSOR 1 CIRCUIT 1 STARTER ENABLE Max Load 10A-230Vac External power supply	36	3	-MC230 502 503 -MC230
Process bus	REMOTE DISPLAY OR MASTER/SLAVE COMMUNICATION Master/Slave bus connection	24	3	-MC24 -MC24 900(+) 901(-)

External power supply needed for Digital output terminals.
Analog Inputs must be generated through external auxiliary voltage.

Note any issues in the Commissioning Form (***Pre-Startup Comments***)

7 Pre-Startup Checks

Once the "*Pre-Power On Checks"* are completed, the technician can proceed with the Pre-Startup Checks by turning on the unit main switch.
Pre-Startup checks have to be performed according to the ***Pre-Startup Checklist*** of the Commissioning Sheet by following the instruction below shown.

Make sure that unit switch (Q0) and both circuit switches are set in 0 state before turning on the unit main switch

Verify that all the items are correct. If the system is not ready and/or items on the Pre-Startup Checklist are incomplete, the technician should immediately notify his supervisor and request direction on how to proceed. A separate work order authorization may be required.

7.1 Voltage Check

- Check the water flow safety switches: verify that field-installed flow switches are installed as per the manufacturer's instructions and IOM (***Paragraph 4.6.2***)
- Verify the electric Main voltage and frequency.
- Verify all on-board auxiliary transformer voltages.
- Check the Compressor Heater current.

Note any issues in the Commissioning Form (***Pre-Startup Comments***)

7.2 Flow Switches

- Check the water flow safety switches: verify that field-installed flow switches are installed as per the manufacturer's instructions and IOM (***Paragraph 4.6.2***)
- Any differential pressure switch connections must be made across the vessel they protect.
- Field-installed Flow switches should not be located close to any source of turbulence and should be located in inlet or outlet piping of the vessel away from any shutoff valves or isolation devices.
- Verify flow switches operation, by throttling the flow and verify that switch opens when flow rate fall below 50% of nominal operating flow rate.

Note any issues in the Commissioning Form (***Pre-Startup Comments***)

7.3 Control Settings

The following procedure must be done using POL 895 remote interface.
Authorized Service Technician must have POL 895 on field for service activities on EWAT-B-C EWFT-B-C- EWAT-M-C units

- Check all MicroTech IV controller settings to verify they are optimized for application conditions.
- Download and/or install updated software as needed.
- Verify settings of all safety and operating controls

7.3.1 Unit Configuration

On the unit controller, enter the "Technician Password" and go into

Main Menu → Commission Unit → Configuration → Unit

Unit menu			
Setpoint	**Default**	**Range**	**Description**
Num of Circ	2	- 1 2	Select the number of circuits available on the unit.
Num Comp C1	4	- 1 2 3 4	Select the number of compressors available on the circuit 1, referring to the unit composition tables and to the compressors currently installed on the unit.
Num Comp C2	4	- 1 2 3 4	Select the number of compressors available on the circuit 2, referring to the unit composition tables and to the compressors currently installed on the unit.
Nom Fan Speed rpm	1100 rpm	400 ÷ 1100	For BRS or SPEEDTROLL Fans Select the max nominal speed of the fan.

			Refer to the appendix Table G – Nominal RPM
Max Fan Speed	1100 rpm	400 ÷ 1100	For BRS or SPEEDTROLL Fans Select the max fan speed. **Refer to the appendix Table H: Max Rpm unit EWAT-B-C or Table L: Max Rpm unit freecooling EWFT-B-C or Table I: Max Rpm unit DAME - EWAT-M-C**
Fans Control	VFD	Step VFD Speedtroll	Set the device used in the regulation of the fans speed
Fans Modbus	None	None Wolong Panasonic	Select the fan modbus model, installed on the unit, Refer to servicesupport@daikinapplied.eu for the Fan Type.
Efficiency	S	S X	Select the unit efficiency class according to the unit label.
Noise Class	S	S L R	Select the Noise class according to the unit label.
Apply Changes	No	No Yes	Use this command to reset the controller to confirm the configuration made

At the end of the Unit Configuration, a restart of the controller ("Apply Changes") is required BEFORE carrying out the Circuit Configuration

The control part of Micro-channel EWAT-B-C EWFT-B-C EWAT-M-C machines is composed of the controller POL688 + one module Danfoss EKF-1A or EKF-2A (depending on whether the machine is Mono or Dual and other POL extension (POL945, POL 985, POL 965). Once the unit has been configured, after the controller has been restarted, a part of the program will automatically be transferred on the Danfoss EKF-1A or EKF-2A modules. Be careful not to remove the power supply if the LEDs of EKF-1A or EKF-2A modules have become green.

7.3.2 Circuit Configuration

Main Menu → Commission Unit → Configuration → Circuit #

Circuit #			
Setpoint	**Default**	**Range**	**Description**
Apply Changes	No	No Yes	Use this command to reset the controller to confirm the configuration made
Num Fan	1	1 ÷ 10	Set the number of the fans dedicated to the circuit # referring to unit configuration table
Comp Type	CopelandCO	No Daikin CopelandHP CopelandCO	Set the compressor model referring to **unit configuration tables (B-C-D-E-F)**.
Comp 1 Hp	48	15 20 25 27 40 48	Set the compressor 1 HP referring to **unit configuration tables (B-C-D-E-F)**.
Comp 2 Hp	48	15 20 25 27 40 48	Set the compressor 2 HP referring to **unit configuration tables (B-C-D-E-F)**.
Comp 3 Hp	48	15 20 25 27 40	Set the compressor 3 HP referring to **unit configuration tables (B-C-D-E-F)**.

		48	
Comp 4 Hp	48	15 20 25 27 40 48	Set the compressor 4 HP referring to **unit configuration tables (B-C-D-E-F)**.
Circuit 1/2			Use this command to switch the circuit configuration menu

At the end of the Unit Configuration, a restart of the controller ("Apply Changes") is required BEFORE carrying out the Circuit Configuration

The control part of Micro-channel EWAT-B-C EWFT-B-C EWAT-M-C machines is composed of the controller POL688 + one module Danfoss EKF-1A or EKF-2A (depending on whether the machine is Mono or Dual and other POL extension (POL945, POL 985, POL 965). Once the unit has been configured, after the controller has been restarted, a part of the program will automatically be transferred on the Danfoss EKF-1A or EKF-2A modules. Be careful not to remove the power supply if the LEDs of EKF-1A or EKF-2A modules have become green.

7.3.3 Options Configuration Controller

Options Menu			
Setpoint	**Default**	**Range**	**Description**
Apply changes	No	Yes No	Use this command to reset the controller to confirm the configuration made
Communication 1/2/3	None	None IP (EKCMBACIP) LON (EKCMLON) MSTP (EKCMBACMSTP) Modbus (EKCM200J) AWM	Select if there is the communication module connected on the left side of the controller. • Modbus = POL902.00 – Communication module Modbus (OPT. 180) • IP = POL908.00 – Communication module BACnet IP (OPT. 182) • MSTP = POL904.00 – Communication module BACnet MS/TP (OPT.181) • LON = POL906.00 – Communication module LON • AWM = POL909.00 – Communication Module AWM
Demand Limit OPT. 90	No	No Yes	This function allows the unit to be limited to a specific maximum load
Energy Meter OPT. 16	None	None Nemo D4-L Nemo D4-Le NanoH	Set the model of energy meter installed on the unit.  Nemo D4-L  Nemo D4-Le  NanoH

Ext Alarm	No	No Event Rapid Stop Pumpdown	This option permit to choose the operations for the unit in case an external event occurs
Free Cooling	No	No Hydronic	Select hydronic in case of EWFT model
Heat Recovery OPT. (01, 03A)	No	No Partial Total	Set the kit installed on the unit (from the selection sheet)
Rapid Restart OPT. 110	No	No Yes	Set whether or not the Rapid Restart is present.
Battery mode	NO	NO NC	Set the Battery mode configuration
Leak Detector OPT. 121	No	No Digital Analog	Set the leak detector.
Modem Type	None	None Teltonika Other	Set as per brand modem installed.
M/S Address OPT.128	None	None Master Slave 1 Slave 2 Slave 3	Enabling of the Master & Slave feature
M/S Num Of Units OPT.128	2	0 ÷ 4	Number of units in Master & Slave system
M/S Sensor Type OPT.128	NTC10K	NTC10K PT1000 None	Master & Slave common water sensor type
PVM OPT.15	No	No Yes	Set whether or not the phase monitoring device is present
Pump Type	On-Off	On-Off Fixd Speed VPF VarDT	Set the type of the pump: • Fixed Speed (OPT. 120 e-f-g-h) • VPF – OPT.143 • VarDT (OPT. 120 e-f-g-h)
Load PD Sns	None	0-10 V 4-20 mA BMS None	Set the type of input for pressure drop measure on the plant (OPT.144) In case of option 144 the signal is 0-10 V.
DLT Enable	Disable	Disable Enable	Enable the Discharge Limit Temperature (OPT 8-142-147)
Fan Max Speed	No	No Yes	Set the Fan Max Speed functionality.
SwitchBoxT OPT.142	No	No Yes	Set whether or not the temperature sensor inside the electrical box is present.
Setpoint Reset OPT.67	No	No 4-20 mA DT OAT	Set which is the command for the setpoint reset function
High Evap Sp (OPT. 187)	No	No Yes	Set the High Evap Setpoint functionality.
Display Units	Metric	Metric English	Unit of measure displayed

Apply Changes	No	No Yes	Use this command to reset the controller to confirm the configuration made

At the end of the Unit Configuration, a restart of the controller ("Apply Changes") is required BEFORE carrying out the Circuit Configuration

The control part of Micro-channel EWAT-B-C EWFT-B-C EWAT-M-C machines is composed of the controller POL688 + one module Danfoss EKF-1A or EKF-2A (depending on whether the machine is Mono or Dual and other POL extension (POL945, POL 985, POL 965). Once the unit has been configured, after the controller has been restarted, a part of the program will automatically be transferred on the Danfoss EKF-1A or EKF-2A modules. Be careful not to remove the power supply if the LEDs of EKF-1A or EKF-2A modules have become green.

7.3.4 Software Options

The possibility to employ a set of software options has been added to the functionality of the chiller, in according with the new Microtech 4 installed on the Unit. The Software Options do not require any additional hardware and regard communication channels and the new energy functionalities.

During the commissioning the machine is delivered with the Option Set chosen by the customer; the Password inserted is permanent and depends on the Serial Machine Number and the Option Set selected.

The available options are:

1. Modbus Slave MSTP for settings refer to BAS integration guide Doc. Name: D-EIGOC00205-23EN_EWA(F)T-B-C
2. BACNet MSTP for settings refer to BAS integration guide Doc. Name: D-EIGOC00105-23EN_EWA(F)T-B-C
3. BACNet IP for settings refer to BAS integration guide Doc. Name: D-EIGOC00105-23EN_EWA(F)T-B-C
4. Performance Monitoring. The Energy Monitoring is a software option not requiring any additional hardware. It can be activated to achieve an estimation (10% partial load - 15% full load accuracy) of the instantaneous performances of the chiller in terms of:
   • Cooling Capacity
   • Power Input
   • Efficiency-COP
   An integrated estimation of these quantities is provided.
5. iCM Standard for settings and configuration refer to the related manual D-EOMOC00610-21_05EN
6. iCM Advanced for settings and configuration contact servicesupport@daikinapplied.eu

7.3.4.1 Performance Monitoring Option

On the unit controller, enter the "Technician Password" and go into:

View/Set Unit → Unit Energy Monitoring → Energy Settings

Fan On/Off	None	None DAE AC 6p DAE AC 8p	Select the On/Off fan type, if option 186 – PERFORMANCE MONITORING is available on the unit and if the Fan Control variable is set to "Step" or "Speedtroll". Refer to **Table H: Max Rpm unit EWAT-B-C** and **Table L: Max Rpm Freecooling unit EWFT-B-C** for the correct On/Off Fan model and also refer to the unit composition.
Pump Type	0	0÷29	Select the pump model installed on the unit if option 186 – PERFORMANCE MONITORING is available. **Table M: Pump models R32 Serie for EWAT-B-C and EWFT-B-C Silver Units** and **Table N: Pump models R32 Serie for EWAT-B-C and EWFT-B-C GOLD Units** to select the correct pump model depending on the unit version and the pumps' own characteristics (single/double low/high head). To determine the characteristic of the pump refer to the material request.

			Once the correct pump model is found, refer to **Table O: Crossed reference Pump Model – Pump Type** to determine the corresponding numeric value for the “Pump Type” variable. ***NOTE:*** For EWAT-M-C unit, the pump kit is not present, therefore the datapoint PumpType must be set to default value “0”

After termination of the Software Options configuration, it's necessary to restart the controller to activate the settings made through the "Apply changes" command.

The control part of Micro-channel EWAT-B-C EWFT-B-C EWAT-M-C machines is composed of the controller POL688 + one module Danfoss EKF-1A or EKF-2A (depending on whether the machine is Mono or Dual and other POL extension (POL945, POL 985, POL 965). Once the unit has been configured, after the controller has been restarted, a part of the program will automatically be transferred on the Danfoss EKF-1A or EKF-2A modules. Be careful not to remove the power supply if the LEDs of EKF-1A or EKF-2A modules have become green.

7.4 Alarm Limits

On the unit controller, enter the “Technician password” and set the alarm limits in the following menu:

Main Menu → Commission Unit → Alarm Limits

At the end of the Alarm Limits setting a restart of the controller (“Apply Changes”) is required BEFORE to proceed with the startup of the unit.

The control part of Micro-channel EWAT-B-C EWFT-B-C EWAT-M-C machines is composed of the controller POL688 + one module Danfoss EKF-1A or EKF-2A (depending on whether the machine is Mono or Dual and other POL extension (POL945, POL 985, POL 965). Once the unit has been configured, after the controller has been restarted, a part of the program will automatically be transferred on the Danfoss EKF-1A or EKF-2A modules. Be careful not to remove the power supply if the LEDs of EKF-1A or EKF-2A modules have become green.

7.5 Energy Meter

7.5.1 IME – Nemo D4-Le MFD4421

If the unit is provided with Opt.16/16a, proceed with the energy meter settings check.

Function of the buttons:

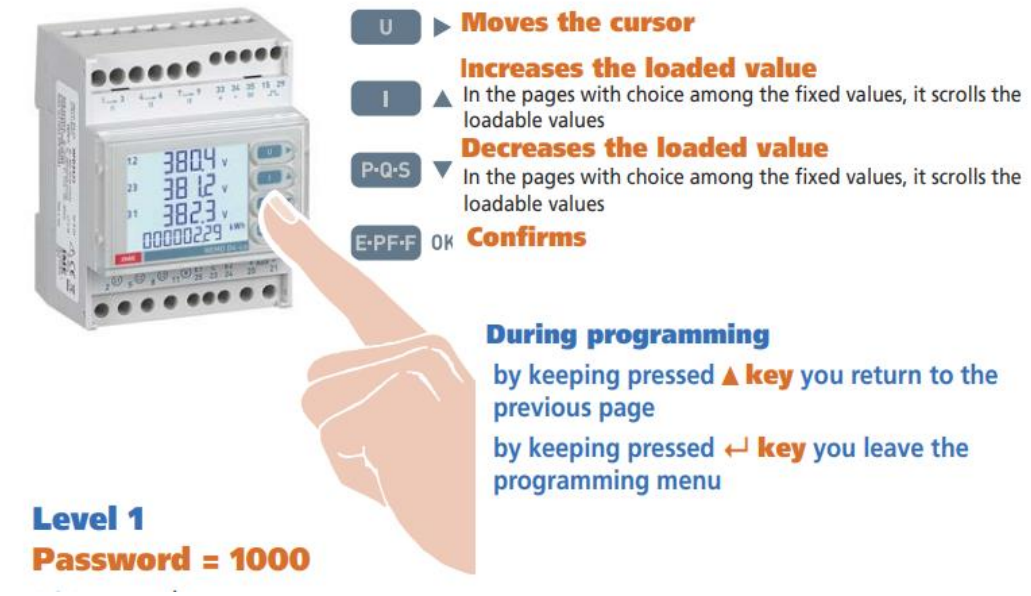

Access the setup menu

1) Press “EPFF” repeatedly until the page is displayed: “ MdbS „
2) Press and hold the “EPFF” button until you see the page: “PASS”
3) Enter the password “1000” and confirm with the “EPFF” button.

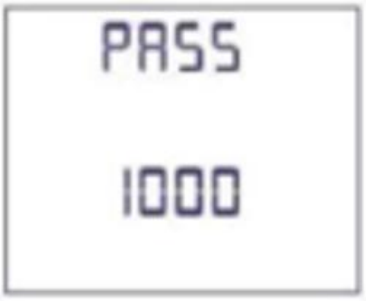

The “arrow” ► is used to move between the various digits, while ▲▼ is used to increment or decrement the numerical value of each digit. The ENTER key is used to confirm the password.

Depending on the wiring configuration, the respective programming scheme must be selected.

1) Log in with the password “1000”
2) Press the “EPFF” button repeatedly until the page is displayed: “SYS”
3) Select the desired configuration: **3-2e** if the number of current transformers is 2, which is the standard configuration.

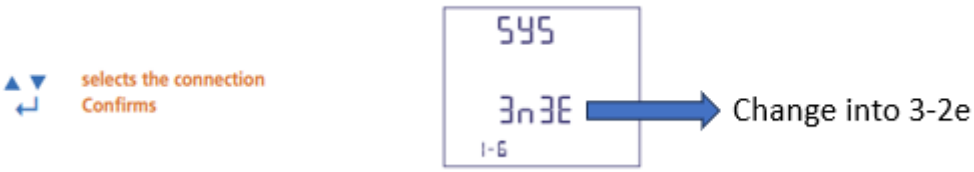

In case the energy meter is integrated with the Modbus communication network of the POL688 controller of the chiller unit, the Modbus parameters of the Nemo energy meter needs to be updated. It will be necessary to configure the address, transmission speed and parity bit on the energy meter corresponding to those on the chiller controller (POL688)

1) Log in with the password “**1000**”
2) Press “EPFF” repeatedly until the page is displayed: “MDB Addr”
3) Select Address **20**

4) Press “EPFF” repeatedly until the page is displayed “MDB Baud”
5) Select the baud rate **19200**

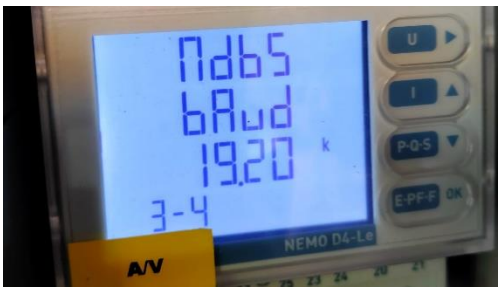

6) Press “EPFF” repeatedly until the page is displayed: “MDB par”
7) Select **None** Parity bit

8) Press “EPFF” repeatedly until the page is displayed “SAVE”

Set the transformation ratio of the current transformers (CT ratio)

On the label of the CT it’s indicated what the maximum primary and secondary currents are.
For example, max primary current 1250A / max secondary current 5A gives an CT ratio of 250 (1250/5)

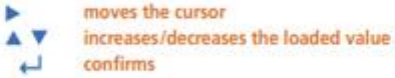

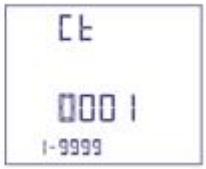

The nominal current value at the Ime Nemo Energy meter input terminals should be between 1A~5A. Do not use CT’s that exceed this range in order to avoid damage to the energy meter!

7.5.2 FRER - NanoH

If the unit is provided with Opt.16/16a, proceed with the energy meter settings check.

Access the setup menu

1. Press and hold the “Enter” button for 3 seconds
2. Enter the password (factory default **0000**) to access the configuration submenu
   In case of forgetting the password, the instrument also accepts the “jolly” password: **2730**

The arrow ◄ is used to move between digits, while ▲▼ is used to increment or decrement the numerical value of each digit.
The “Enter” button is used to confirm the password.

Set up the energy meter wiring configuration

Dependin.0g on the wiring configuration, the respective programming scheme must be selected

1. Log in with the password “**0000**”
2. Press the “▼” button several times until you see the page: “**C-tut**”.

CtUt	Configurazione rapporti TA/TV (QS2P3H...) *CT and VT ratio setting (QS2P3H...)*	◄ ►	Ct-1	Corrente primaria / *Primary current*	►	(1 ÷ 15000 A) ◄▲▼	ENTER
▲ ▼		▲ ▼	Ct-2	Corrente secondaria / *Secondary current*	►	1 (1A); 5 (5A) ◄▲▼	ENTER
			ut-1	Tensione primaria / *Primary voltage*	►	(50V ÷ 1MV) ◄▲▼	ENTER
			ut-2	Tensione secondaria / *Secondary voltage*	►	(50 ÷ 600 V) ◄▲▼	ENTER

Depending on the absorption range of the current transformer and its output, it is necessary to set the primary/secondary current ratio.

For example: if the TA has input 800A and output 5A, the CT ratio is 800A / 5A = 160.

3. Select the sub-category “**Ct-1**”, press “**Enter**” and set the input current value to the TA. To confirm press “**Enter**”
4. Select the sub-category “**Ct-2**”, press “**Enter**” and set the output current value to the TA. To confirm press “**Enter**”

The current nominal value at the input of the energy meter is 1A or 5A. Do not exceed the range in order to avoid damage to the energy meter.

5. Select the sub-category “**ut-1**”, press “**Enter**” and set the nominal voltage value. To confirm press “**Enter**”

6. Select the sub-category “**ut-2**”, press “**Enter**” and set the nominal voltage value. To confirm press “**Enter**”

As no voltage transformers are installed, the nominal voltage values at the input and output of the energy meter are both set equal to the nominal voltage value.

Set parameters for Modbus® communication (where applicable)

It is necessary to configure the address, data transmission speed and parity bits on the energy meter corresponding to those on the controller.

1. Log in with the password “**0000**”
2. Press the '▼' button several times until you see the page: '**R485**' and press **Enter**

rS485	Configurazione RS485 (se installata) / *RS485 setting (only when available)*	◀ ▶	Adr	Indirizzo logico / *Logic address*	▶	(1÷247) ◀▲▼	ENTER
▲ ▼		▲ ▼	bPS	Baud rate	▶	9.6 (9600bps); 19.2 (19200bps); 38.4 (38400bps); 57.6 (57600bps) ▲▼	ENTER
			PAr	Parità / *Parity*	▶	nonE (Nessuna/*None*); EuEn (Pari/*Even*); Odd (Dispari/*Odd*) ▲▼	ENTER
			StOP	Bits di stop / *Stop Bits*	▶	1; 2; ▲▼	ENTER

3. Select the subcategory “**Adr**”, press “**Enter**” and select address **21**. To confirm press “**Enter**”.
4. Select the subcategory “**bPs**”, press “**Enter**” and select data transmission speed **38.4** (38400 bps). To confirm press “**Enter**”.
5. Select the subcategory “**Par**”, press “**Enter**” and select the parity bit **Even**. To confirm press “**Enter**”.
6. Select the subcategory “**Stop**”, press “**Enter**” and select the stop bit **1**. To confirm press “**Enter**”.

The values to be entered are summarised in the following table:

Adr	21
bPS	38.4 bps
Par	Even
Stop	1

7.6 Pre-Running Adjustments

Pre-Running Adjustments must be separately performed for each circuit

It is highly recommended to use a double sample sensor for the calibration of temperature sensors

7.6.1 Check and calibration of unit temperature sensors

Calibration of unit temperature sensors is a fundamental step for the correct operation of the unit.
There are three temperature sensors to be calibrated (for each circuit):

- Evaporator LWT
- Evaporator EWT
- OAT

7.6.1.1 Evaporator Leaving Water Temperature

- Place the sample and Evap LWT sensors in a container with ice
- Enter in *Commission Unit* → *Sensors Calibration* → *Unit* menu and then compare the Evap *LWT* value with that detected by the sample sensor.
- If the temperature value measured by the unit sensor is different from the sample one, set the difference in the *Offset* parameter.

Make sure to have a good water/ice mix and wait for the water/ice system temperature to stabilize before to proceed with the calibration.
Place both sensors (sample and unit) in the middle of the container in order to not affect the readings.

7.6.1.2 Evaporator Entering Water Temperature

- Place the sample and Evap EWT sensors in a container with ice.
- Enter in *Commission Unit* → *Sensors Calibration* → *Unit* menu and then compare the Evap *EWT* value with that detected by the sample sensor
- If the temperature value measured by the unit sensor is different from the sample one, set the difference in the *Offset* parameter.

Make sure to have a good water/ice mix and wait for the water/ice system temperature to stabilize before to proceed with the calibration.
Place both sensors (sample and unit) in the middle of the container in order to not affect the readings.

7.6.1.3 Outside Air Temperature

- Place the sample and suction temperature sensors in ambient temperature.
- Enter in *Commission Unit* → *Sensors Calibration* → *Unit* menu and then compare the *OAT* value with that detected by the sample sensor.
- If the temperature value measured by the unit sensor is different from the sample one, set the difference in the *Offset* parameter.

Make sure to have a stable air condition and wait until read unit and sample temperatures are stabilized respect to air ambient temperature before to proceed with the calibration.

7.6.2 Check and calibration of circuit temperature sensors

Calibration of circuit temperature sensors is a fundamental step for the correct operation of the unit.
There are two temperature sensors to be calibrated (for each circuit):

- The Suction temperature sensor (ST-1 & ST-2)
- The Discharge temperature sensor (DT-1 & DT-2)

7.6.2.1 Suction Temperature sensor

- Place the sample and suction temperature sensors in a container with ice.
- Enter in *Commission Unit* → *Sensors Calibration* → *Circuit #1/2* menu and then compare the *Suction Tmp* value with that detected by the sample sensor.
- If the temperature value measured by the unit sensor is different from the sample one, set the difference in the *Suction Offset* parameter.

Make sure to have a good water/ice mix and wait for the water/ice system temperature to stabilize before to proceed with the calibration.
Place both sensors (sample and unit) in the middle of the container in order to not affect the readings.

Suction temperature sensor is the most crucial of chiller's sensors as will guarantee the correct working of the EXV and consequent safe compressor running

7.6.2.2 Discharge temperature sensor

- Place the sample and discharge temperature sensors in ambient temperature
- Enter in *Commission Unit* → *Sensors Calibration* → *Circuit #1/2* menu and then compare the *Discharge Tmp* value with that detected by the sample sensor
- If the temperature value measured by the unit sensor is different from the sample one, set the difference in the *Disch Offset* parameter.

Make sure to have a stable air condition and wait until read unit and sample temperatures are stabilized respect to air ambient temperature before to proceed with the calibration.

Refer to Table B for the complete overview of the components positioning.

7.6.2.3 Discharge Temperature sensor with DLT control option (opt.08, opt.142 and opt. 187)

- Place the sample and discharge temperature sensors in ambient temperature.
- Enable the DLT option in:
  Commission Unit → Configuration → Option → DLT Enable
- Enter in:
  Commission Unit → Sensors Calibration → Circuit #1/2 menu and then compare the *Discharge Tmp* value with that detected by the sample sensor.
- If the temperature value measured by the unit sensor is different from the sample one, set the difference in the *Disc Offset* parameter.

Make sure to have a stable air condition and wait until read unit and sample temperatures are stabilized respect to air ambient temperature before to proceed with the calibration.

7.7 Dry Tests

Perform the Dry Tests by setting the unit in “test mode”:

1. Enter the “Technician Password” on the controller
2. Go in *Main Menu → Unit Mode → Mode*
3. Set *Test*

All the dry tests are performable through the following menu:

Main Menu → Commission Unit → Manual Control

7.7.1 Unit Alarm

Check the correct activation of the software general alarm:

Main Menu → Commission Unit → Manual Control → Unit → Unit Alarm

7.7.2 Pump #1/#2

Check the correct activation of the water pump (if it is controlled by the unit):

Main Menu → Commission Unit → Manual Control → Unit → Pump #1/#2

7.7.3 Fan

Check the correct functionality of the fans:

7.7.3.1 ON-OFF Fans

Main Menu → Commission Unit → Manual Control → Circuit # → Fan [number]

In this menu is possible to set ON or OFF the fan. Moreover, during this phase check the rotation sense of the fans, if it is right the force of the air must be from the floor to the top.

7.7.3.2 Brushless EC Fans

Refer to fan table configuration below to check where EC fans (brushless) are used.

Unit type	Opt.42	Opt.08	Opt.142A	Opt.229	Opt.160C
EWAT-B-SS	X (Only Step 1)		X	X	X
EWAT-B-SR		X	X	X (Standard)	x
EWAT-B-XS	X (Only Step 1)		X	X	X

EWAT-B-XR	X (Only Step 1)		X	X	X

Main Menu → Commission Unit → Manual Control → Circuit # → Fan speed

In this menu is possible choose the capacity of the fan. Moreover, during this phase check the rotation sense of the fans, if it is right the force of the air must be from the floor to the top.

7.7.4 Sub-Cooler solenoid (Opt. 01-03A)

Check the correct functionality of the sub-cooler valve:

Main Menu → Commission Unit → Manual Control → Circuit #1/#2 → Subcooler

7.7.5 Compressor Heaters

Check the correct activation of compressor oil resistances:

Main Menu → Commission Unit → Manual Control → Circuit #1/2 → Crankcase Heater

In order to test this function the switch Q_0 must be set to 1

7.7.6 High Pressure Switches Test

To test the High-Pressure Switches:

Main Menu → "Commission Unit" → "Alarm Limits" → "MHP Test"

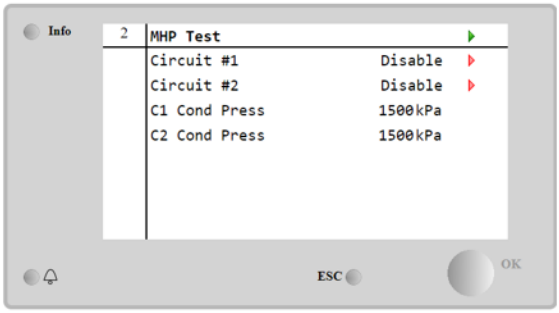

During this procedure high pressure relief valves may open. Before the test, verify that the relief valves are correctly calibrated. Keep a safe distance from the valves and verify, before the test procedure, that nobody is near the unit.

To perform the test, in the "MHP Test" menu, set the Circuit 1 to "Enable", and then set Circuit 2.
This setting ignores both the High pressure partialization and the High-pressure alarm referred to the High-pressure transducer readings.
During this procedure the circuit fans are switched OFF, allowing the high-pressure switch to open the circuit. The parameter will automatically be restored to OFF after the test.

During this procedure constantly check the high-pressure value.

1) Start the test on Circuit 1, constantly check the rising of the condensation pressure. Switch off the Unit if the pressure reaches the High-pressure switch set value (42 bar).
2) Wait until the intervention of the High-pressure switches. It should switch off the compressor at 42 bar (tolerance: +0 bar -1.4 bar)
3) Repeat the procedure for Circuit 2 accordingly.

This operation must be performed with accuracy. Use the Emergency button if necessary. If the test fails (the pressure rises a value over the High-pressure switch limit), there is an additional control which turns the unit off, when the pressure transducer reads 42.5 bar. Verify the root cause of the test failure before repeating the test.
After the test is completed, manually reset the high-pressure switches by pushing the blue button on top of it and reset the alarm via the POL688 HMI.
Turn on the compressors to continue the test.

7.7.7 Expansion Valve

Verify the correct operation of the EXV valves:

Main Menu → *Commission Unit* → *Manual Control* → *Circuit #1/2* →EXV Position

And set the opening percentage, is possible verify the movement of the piston inside the expansion valve through the glass post on it.

Not possible for ETS 12-C

7.7.8 Compressor

In order to verify the correct rotation sense of the compressors some operations are needed:

- Check and verify the oil level inside the compressor through the oil sight glass post on the oil equilibration pipe connected at the bottom side of the compressors. The right level is between the bottom of the sight glass and ¾ of the full.

In units equipped with Daikin-M compressors oil level cannot be checked

- Open the Discharge valve of the compressor branch (if it is present) → *Mechanical*
- Open the Suction valve of the compressor branch (if it is present) → *Mechanical*
- Open the Liquid line valve → *Mechanical*
- Turn on the water pump in order to guarantee the correct flow rate trough the evaporator (Pump1 or Pump2 if the devices is controlled by the unit software):

Main Menu → *Commission Unit* → *Manual Control* → *Unit* → Pump#1/2 and Set On

Verify to carry out all the activity reported upon before proceeding with the compressor test

Now is possible verify the correct rotation sense of each compressor:

Main Menu → *Commission Unit* → *Manual Control* → *Circuit #1/2* → Compressor 1/2/3/4 set On

After the start of the compressor if the rotation sense is right, is possible see:

- An increasing of the Condenser pressure at least 10 kPa
- A decreasing of the Evaporator pressure at least 10kPa

Is possible check directly in the Compressor 1/2/3/4 menu the upon pressure.

If the compressor doesn't make a lift in pressure, it is running in the wrong rotation sense. STOP IT!!

During this check pay attention to the evaporating pressure: if it drops below the pump down setpoint, open in a controlled way the expansion valve in order to reestablish the pressure inside the evaporator

When the compressor run in the opposite direction, it could be related to a wrong power supply Phases sequence. In order to solve this inconvenience, re-check the electrical power supply connection of the compressor and then verify the main supply connection.
Note any issues in the Commissioning Form (***Pre-Startup Comments***)

To avoid the possibility to break the compressor, run it only one per time

7.7.9 FC Water valve (Only EWFT units)

Before following the procedure described on below, be sure that the specific procedures described in the D-EIMAC01802-23_01EN (Paragraphs 4.8.3 and 4.8.4) has been carried out. The unit is shipped with the valve "d" closed and pressurized with nitrogen (up to 1-2 bar).

In hydronic freecooling unit there are two valves working in alternative way: when one is open, the other must be closed or viceversa.

Commission Unit → Manual control → Unit → HydrFC Valve

Enabling the function, it must occur that valve A is open and valve B is closed. By disabling it, however, the exact opposite must occur. Visually check that the valves open and close completely and in the correct way of operation.

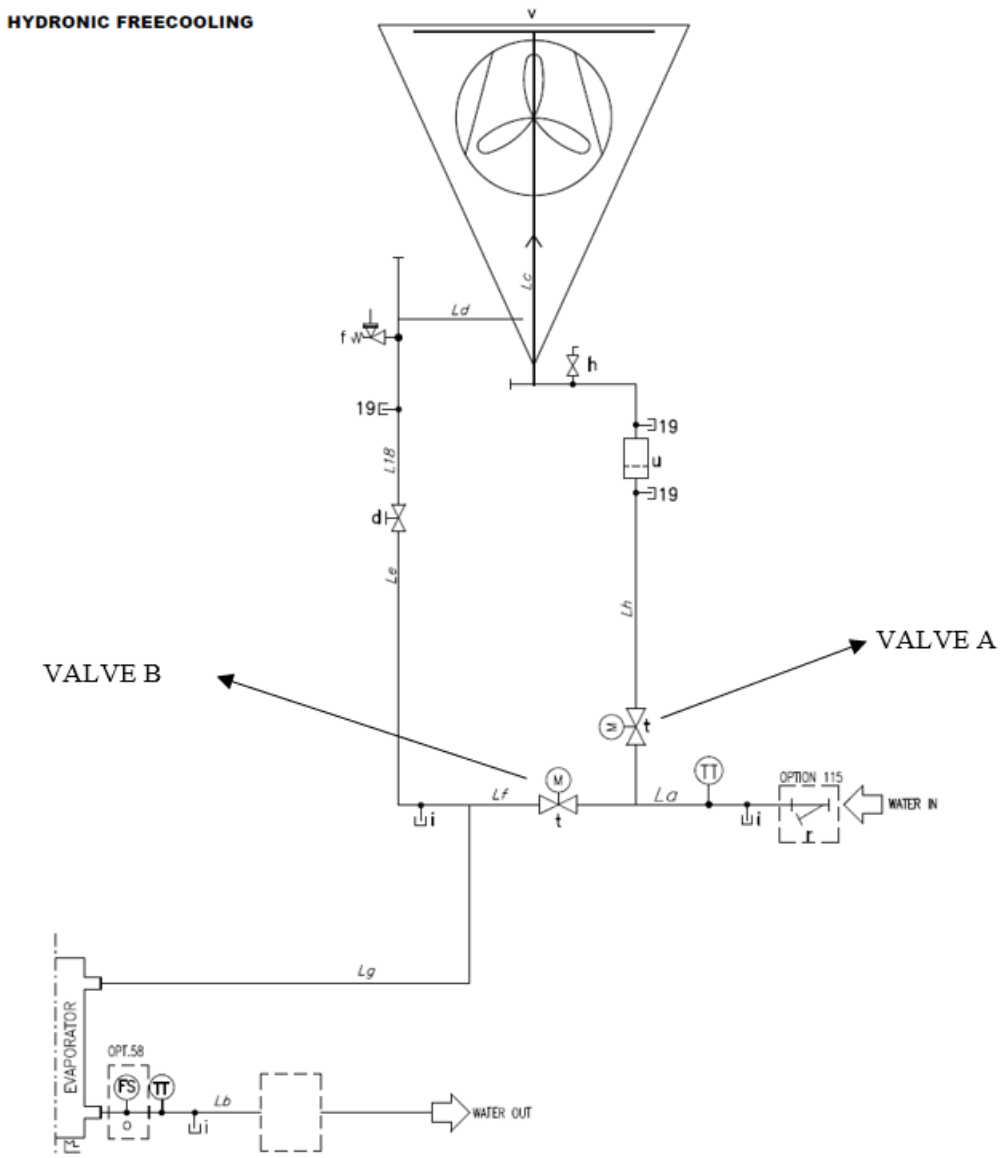

7.7.9.1 Visual inspection

It is strictly required that the valve and the actuator position are aligned, to guarantee the correct operation of the valve during the opening and closing transition.

Belimo PRC2A model

To ensure the correct alignment of actuator and valve, it is necessary to check that when the actuator is in the 0° position, the valve is fully closed, and when it is at 90°, the valve is fully open.

Refer to the orange indicators located on the valve and the actuator indicator.

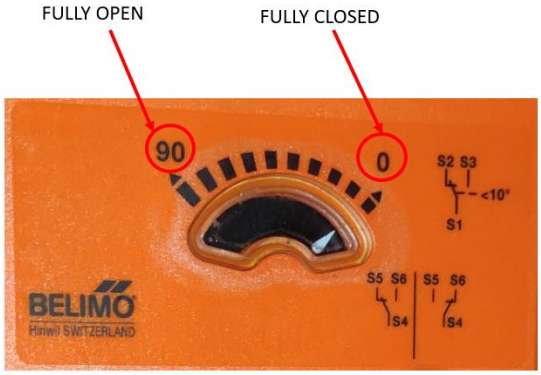

Belimo Actuator indicator

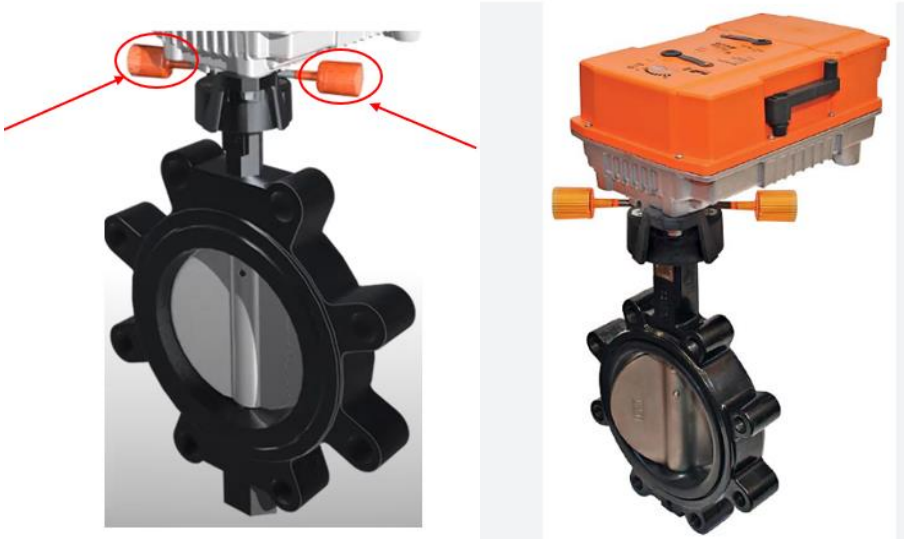

Belimo Valve indicator spring

Belimo PRC2A actuator model			
FC Mode		**Valve A**	**Valve B**
Not Active	Valve position indication	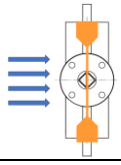	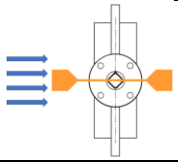
	Actuator position indicator		
Active	Valve position indication	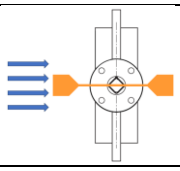	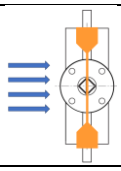
	Actuator position indicator		

- If the orange indicators follow the flow direction, then the valve is open.
- If the orange indicators are perpendicular to the flow, then the valve is closed.

Check if the orange indicators springs are in the appropriate location.

Belimo GR230A model:
To ensure the correct alignment of actuator and valve, it is necessary to check that when the actuator is in the 0 position, the valve is fully closed.

1. Check that the notch valve indicator direction is aligned with the fully Open/Closed actuator position.

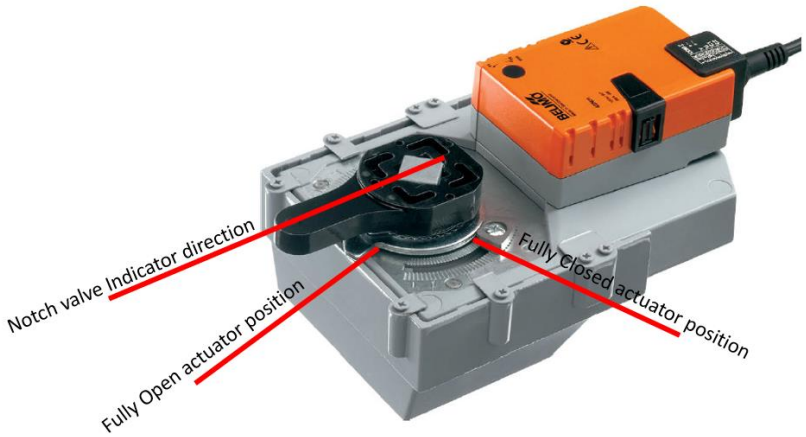

Belimo GR230A actuator model		
FC Mode	**Valve A**	**Valve B**
Not Active	 Closed	 Open
Active	 Open	 Closed

Check if the orange indicator springs are In the appropriate location.

If the motor position does not match the valve opening position, it is possible to manually adjust the motor position. For the procedure, please contact the servicesupport@daikinapplied.eu.

8 Start-Up

The first data acquisition for each circuit must be performed in “Cooling mode”, in order to also check the correctness of the refrigerant charge by measuring the subcooling at the filter dryer (refer to *E2.10* item of the *Commissioning Sheet*).

Make sure to open all the service valves before to perform the first unit Start-Up:

- ***Liquid line***
- ***Discharge line (if present)***
- ***Suction line (if present)***
- ***Turn on the water pump***

To do that, follow these steps, referring to the “Circuit #X”:

1. Enter the “Technician Password” on the controller
2. Go in Main Menu→Unit Mode → Mode and set Cool
3. Go in *Main Menu → Unit Enable*
4. Set *Circuit #1 → Enable, Circuit #2 →Disable*
5. *Set in Main Menu →View/Set Unit →Hydronic Free Coo → Disable*
6. Set *Unit → Enable*
7. *Set on Local the switch Q0*

The circuit is now ready for the Running Adjustment *(paragraph 8.1)*

8.1 Running Adjustments

Running Adjustments must be separately performed for each circuit while it is running near the rating conditions.

Make sure that the circuit is working in cooling mode in stable conditions in order to don’t affect the following operations result

Make sure that the circuit status is “Run: Normal” before to proceed with the Running Adjustments

8.1.1 Check and calibration of pressure transducers

Calibration of pressure transducers is a fundamental step for the correct operation of the unit.
There are two pressure sensors to be calibrated (for each circuit):

- The suction pressure transducers
- The discharge pressure transducers

8.1.1.1 Evaporator Pressure

- Connect the sample transducer to the “T shape” pressure port on which the suction pressure transducer is installed.
- With the unit on, with the *Suction Temperature* of 7°C ± 1°C and before making gas charge adjustments, enter the *Commission Unit → Calibrate Sensors → Circuit #1/2* menu and then compare the *Evap Pressure* value with that detected by sample transducer. If the pressure value measured by the unit transducer is different from the sample one, set the difference in the *Evp Pr Offset* parameter.

Sample transducer is the measuring device that has been calibrated and it must be very accurate.

If this difference is greater than ± 20 kPa replace the transducer and repeat the operation.

Evaporator pressure transducer is the most crucial of chiller’s transducer as will guarantee the correct working of the EXV with consequent safe compressor running and since all low pressure safeties are based on its readings.

8.1.1.2 Condenser Pressure

- Connect the transducer to the “T shape” pressure port on which the discharge pressure transducer is installed.
- With the unit on, enter in *Commission Unit* → *Calibrate Sensors* → *Circuit #1/2* menu and then compare the *Cond Pressure* value with the one detected by the sample transducer. If the value of the pressure measured by the unit transducer is different from the sample one, set the difference in the *Cond Pr Offset* parameter.

If this difference is greater than ± 90 kPa replace the transducer and repeat the operation.

8.1.2 Subcooling measurement point

The calculation of the subcooling at the filter dryier (in addition to the visual inspection of any flash gas on the liquid sight glass) is the main parameter by which the need for a charge adjustment is established. This quantity must be quantified with the least possible margin of error.

What’s needed:

- Additional pressure transducer
- Additional temperature sensor

Proceed to the installation as follows:

- The pressure sensor must be installed on one of the two pressure points on the corner tap, close to the dryer filter.
- The temperature sensor must be installed on a smooth pipe section (not on a weld, for example), as close as possible to the pressure sensor me÷ntioned above.

Temperature measurements are among the most difficult to perform. Install the temperature probes with a correct quantity of thermal paste, tighten the probes firmly to the pipe and abundantly insulate the probes so that external agents cannot affect the measurement.

The optimal refrigerant charge depends by the unit configuration. Is possible identify the right refrigerant charge while the unit is working through the following conditions:

- For Standard units, heat reclaim units and Hydronic Freecoling units (operating in Mechanical cooling or Mixed freecoling)
  - Subcooling (at the dryer filter) = 7 ± 3 °C
  - Suction Super Heat = 5 ± 1 °C

The charge adjustment has to be performed step-by-step, adding or removing refrigerant per time according to the table below:

Circuit Refrigerant Charge	Refrigerant Charge step adjustment
1 ÷ 10 kg	100 g
10,1 ÷ 50 kg	500 g
50,5 ÷ 100 kg	1 kg
101 ÷ 500 kg	2 kg
>500 kg	10 kg

After every charge step, wait 5 minutes after the liquid temperature stabilizing before to proceed with the next eventual adjustment step.

8.2 Running Safeties Test

8.2.1 Flow Switches

With the running unit, disable the water pumps and check if “Water Flow Loss” alarm appears after 30sec.
If not, check proceed with the check of correct flow switch installation and calibration.

8.3 Data acquisition

8.3.1 EWAT-B-C EWFT-B EWAT-M-C units

Make sure that the circuit is working in stable conditions in order to don't affect the Data Acquisition

- Data acquisition has to be performed according to the ***Data Acquisition*** section of the Commissioning Sheet.
- Data acquisition has to be separately performed for each circuit in Chiller and Free Cooling mode.
  To select the circuit working mode refer to the following setting:

  Main Menu → View/Set Unit → Free Cooling

  Disable this setpoint for testing the unit in Mechanical mode and through the keypad choose the circuit to put in operation.
- It is recommended to let the circuit reach the 100% of capacity before to proceed with the data acquisition (according to the plant load conditions).
- It is recommended to let the circuit reach stable operating conditions before to proceed with the data acquisition.
  To evaluate the stable operation of the unit check, following conditions must be satisfied:
  - Circuit Status equal to "Run=Normal"
  - ELWT is as near as possible to the relative setpoint
  - EXV is working in Superheat-Pressure mode:
    - Main Menu → View/Set Circuit →Circuit# → EXV → State = Pressure
  - Evaporator Pressure is equal to the Pressure target for 5 minutes continuously:
    - Main Menu → View/Set Circuit →Circuit# → EXV → Evap Target

CLIMATIX Scope Light data recording during commissioning is strongly suggested.
For all material required for the recording get in contact with servicesupport@daikinapplied.eu

8.3.2 Only for EWFT-B-C units

This particular test can be performed only if the freecooling activation conditions are reached in the installation site.

After the test in Mechanical mode, if some load on the plant side is still present, is possible test the unit in Free Cooling mode. To select the Free Cooling mode, refer to the following setting:

Main Menu → View/Set Unit → Hydronic Free Cooling → Input → Enable

Enable this setpoint and record the data during the freecooling working operations.
To perform this test, be sure to disable both circuit in the unit enable menu:

Main Menu → Unit Enable → Circuit 1 → Disable
Main Menu → Unit Enable → Circuit 2 → Disable

CLIMATIX Scope Light data recording during commissioning is strongly suggested.
For all material required for the recording get in contact with servicesupport@daikinapplied.eu

9 TABLES

9.1 Layout

Table A – Unit Layout

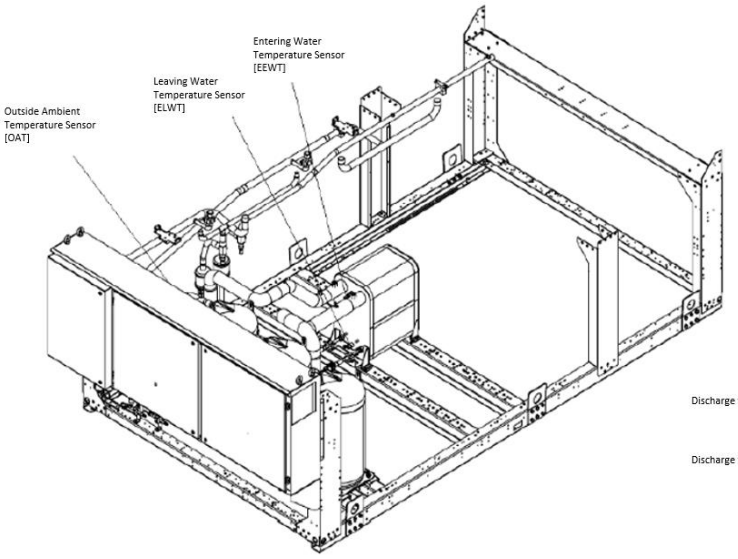

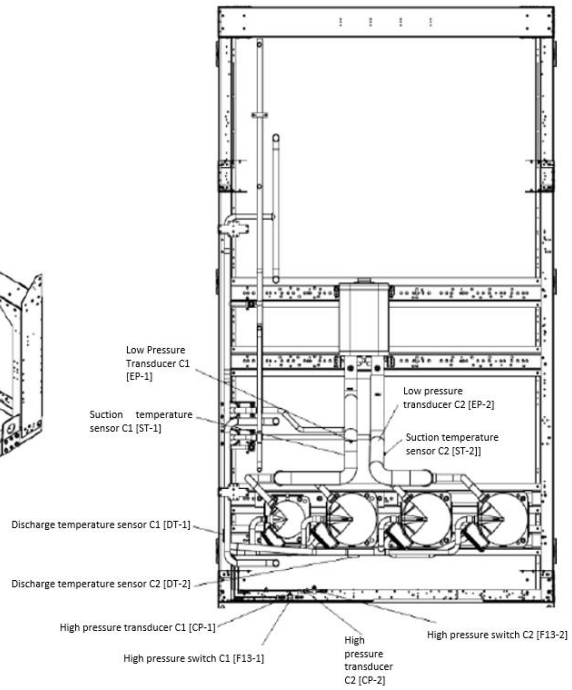

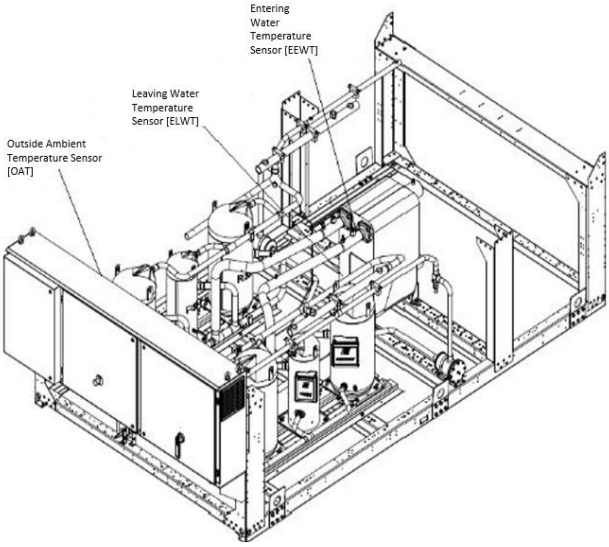

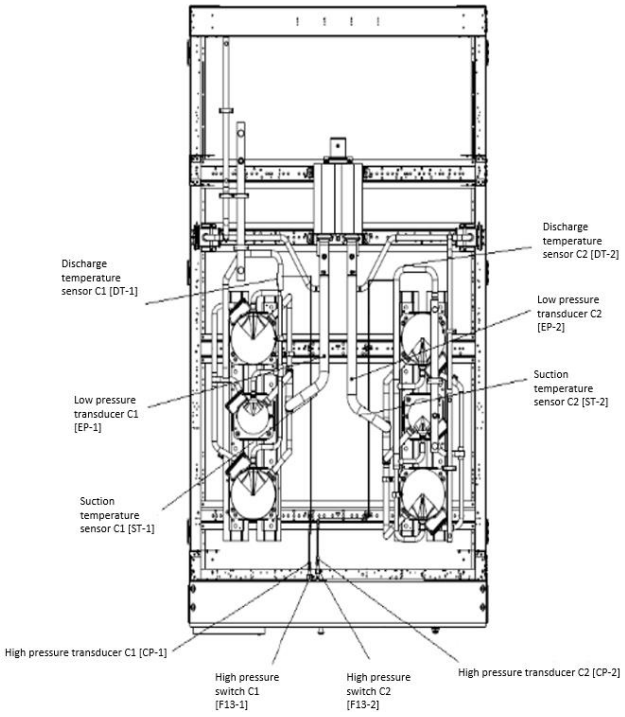

9.2 Unit Configuration

Table B - Unit composition for EWAT XXX B Efficiency Class S (All the Efficiency Class R units are equipped with inverter fans)

Size	#Fan1	#Fan2	Circ#	comp11	comp21	comp31	comp41	comp12	comp22	comp32	comp42
EWAT310BS-C1	4	-	1	48 hp	27 hp	48 hp	-	-	-	-	
				COPELAND C/O				-			
EWAT350BS-C1	4	-	1	48 hp	48 hp	48 hp	-	-	-	-	-
				COPELAND C/O				-			
EWAT250BS-C2	2	2	2	15 hp	25 hp	-	-	25 hp	25 hp	-	-
				DAIKIN-M				DAIKIN-M			
EWAT270BS-C2	2	2	2	25 hp	25 hp	-	-	25 hp	25 hp	-	-
				DAIKIN-M				DAIKIN-M			
EWAT320BS-C2	2	2	2	27 hp	27 hp	-	-	27 hp	48 hp		
				COPELAND C/O				COPELAND C/O			
EWAT380BS-C2	2	4	2	27 hp	27 hp		-	48 hp	48 hp		
				COPELAND C/O				COPELAND C/O			
EWAT430BS-C2	2	4	2	27 hp	48 hp	-	-	48 hp	48 hp	-	
				COPELAND C/O				COPELAND C/O			
EWAT480BS-C2	2	4	2	27 hp	48 hp	-	-	48 hp	27 hp	48 hp	-
				COPELAND C/O				-			
EWAT570BS-C2	4	4	2	48 hp	48 hp	-	-	48 hp	27 hp	48 hp	-
				COPELAND C/O				COPELAND C/O			
EWAT620BS-C2	4	4	2	48 hp	27 hp	48 hp	-	48 hp	27 hp	48 hp	-
				COPELAND C/O				COPELAND C/O			
EWAT670BS-C2	4	4	2	48 hp	27 hp	48 hp	-	48 hp	48 hp	48 hp	-
				COPELAND C/O				COPELAND C/O			
EWAT730BS-C2	4	6	2	48 hp	48 hp	48 hp	-	48 hp	48 hp	48 hp	-
				COPELAND C/O				COPELAND C/O			
EWAT790BS-C2	4	6	2	48 hp	27 hp	48 hp	-	48 hp	48 hp	48 hp	48 hp
				COPELAND C/O				COPELAND C/O			
EWAT860BS-C2	6	6	2	48 hp	48 hp	48 hp	-	48 hp	48 hp	48 hp	48 hp
				COPELAND C/O				COPELAND C/O			
EWAT960BS-C2	6	6	2	48 hp	48 hp	48 hp	48 hp	48 hp	48 hp	48 hp	48 hp
				COPELAND C/O				COPELAND C/O			

Table C - Unit composition for EWAT XXX B Efficiency Class X (All the Efficiency Class R units are equipped with on/off fans)

Size	#Fan1	#Fan2	Circ#	comp11	comp21	comp31	comp41	comp12	comp22	comp32	comp42
EWAT250BX-C1	4	-	1	48 hp	48 hp	-	-	-	-	-	-
				COPELAND C/O				-			
EWAT320BX-C1	6	-	1	48 hp	27 hp	48 hp	-	-	-	-	-
				COPELAND C/O				-			
EWAT370BX-C1	6	-	1	48 hp	48 hp	48 hp	-	-	-	-	-
				COPELAND C/O				-			
EWAT180BX-C2	2	2	2	15 hp	15 hp	-	-	15 hp	15 hp	-	-
				DAIKIN-M				DAIKIN-M			
EWAT210BX-C2	2	2	2	15 hp	15 hp	-	-	15 hp	25 hp	-	-
				DAIKIN-M				DAIKIN-M			
EWAT230BX-C2	2	2	2	15 hp	25 hp	-	-	15 hp	25 hp	-	-
				DAIKIN-M				DAIKIN-M			
EWAT250BX-C2	2	2	2	15 hp	25 hp	-	-	25 hp	25 hp	-	-
				DAIKIN-M				DAIKIN-M			
EWAT290BX-C2	2	4	2	25 hp	25 hp	-	-	25 hp	25 hp	-	-
				DAIKIN-M				DAIKIN-M			
EWAT320BX-C2	2	4	2	15 hp	25 hp	-	-	25 hp	25 hp	25 hp	-
				DAIKIN-M				DAIKIN-M			
EWAT350BX-C2	2	4	2	25 hp	25 hp	-	-	25 hp	25 hp	25 hp	-
				DAIKIN-M				DAIKIN-M			
EWAT390BX-C2	2	4	2	27 hp	27 hp	-	-	48 hp	48 hp	-	-
				COPELAND C/O				COPELAND C/O			
EWAT450BX-C2	4	4	2	27 hp	48 hp	-	-	48 hp	48 hp	-	-
				COPELAND C/O				COPELAND C/O			
EWAT510BX-C2	4	4	2	48 hp	48 hp	-	-	48 hp	48 hp	-	-
				COPELAND C/O				-			
EWAT540BX-C2	4	6	2	27 hp	48 hp	-	-	48 hp	27 hp	48 hp	-
				COPELAND C/O				COPELAND C/O			
EWAT590BX-C2	4	6	2	48 hp	48 hp	-	-	48 hp	27 hp	48 hp	-
				COPELAND C/O				COPELAND C/O			
EWAT630BX-C2	4	6	2	48 hp	48 hp	-	-	48 hp	48 hp	48 hp	-
				COPELAND C/O				COPELAND C/O			
EWAT720BX-C2	6	6	2	48 hp	27 hp	48 hp	-	48 hp	48 hp	48 hp	-
				COPELAND C/O				COPELAND C/O			
EWAT760BX-C2	6	6	2	48 hp	48 hp	48 hp	-	48 hp	48 hp	48 hp	-
				COPELAND C/O				COPELAND C/O			
EWAT830BX-C2	6	8	2	48 hp	27 hp	48 hp	-	48 hp	48 hp	48 hp	48 hp
				COPELAND C/O				COPELAND C/O			
EWAT880BX-C2	6	8	2	48 hp	48 hp	48 hp	-	48 hp	48 hp	48 hp	48 hp
				COPELAND C/O				COPELAND C/O			
EWATC10BX-C2	8	8	2	48 hp	48 hp	48 hp	48 hp	48 hp	48 hp	48 hp	48 hp
				COPELAND C/O				COPELAND C/O			

Table D – Unit composition for EWFT XXX B Efficiency Class S (All the units are equipped with inverter fans)

Size	#Fan1	#Fan2	Circ#	comp11	comp21	comp31	comp41	comp12	comp22	comp32	comp42
EWFT310BS-C1	4	-	1	48 hp	27 hp	48 hp	-	-	-	-	
				COPELAND C/O				-			
EWFT350BS-C1	4	-	1	48 hp	48 hp	48 hp	-	-	-	-	-
				COPELAND C/O				-			
EWFT250BS-C2	2	2	2	15 hp	25 hp	-	-	25 hp	25 hp	-	-
				DAIKIN-M				DAIKIN-M			
EWFT270BS-C2	2	2	2	25 hp	25 hp	-	-	25 hp	25 hp	-	-
				DAIKIN-M				DAIKIN-M			
EWFT320BS-C2	2	2	2	27 hp	27 hp	-	-	27 hp	48 hp		
				COPELAND C/O				COPELAND C/O			
EWFT380BS-C2	2	4	2	27 hp	27 hp		-	48 hp	48 hp		
				COPELAND C/O				COPELAND C/O			
EWFT430BS-C2	2	4	2	27 hp	48 hp	-	-	48 hp	48 hp	-	
				COPELAND C/O				COPELAND C/O			
EWFT480BS-C2	2	4	2	27 hp	48 hp	-	-	48 hp	27 hp	48 hp	-
				COPELAND C/O				-			
EWFT570BS-C2	4	4	2	48 hp	48 hp	-	-	48 hp	27 hp	48 hp	-
				COPELAND C/O				COPELAND C/O			
EWFT620BS-C2	4	4	2	48 hp	27 hp	48 hp	-	48 hp	27 hp	48 hp	-
				COPELAND C/O				COPELAND C/O			
EWFT670BS-C2	4	4	2	48 hp	27 hp	48 hp	-	48 hp	48 hp	48 hp	-
				COPELAND C/O				COPELAND C/O			
EWFT730BS-C2	4	6	2	48 hp	48 hp	48 hp	-	48 hp	48 hp	48 hp	-
				COPELAND C/O				COPELAND C/O			
EWFT790BS-C2	4	6	2	48 hp	27 hp	48 hp	-	48 hp	48 hp	48 hp	48 hp
				COPELAND C/O				COPELAND C/O			
EWFT860BS-C2	6	6	2	48 hp	48 hp	48 hp	-	48 hp	48 hp	48 hp	48 hp
				COPELAND C/O				COPELAND C/O			
EWFT960BS-C2	6	6	2	48 hp	48 hp	48 hp	48 hp	48 hp	48 hp	48 hp	48 hp
				COPELAND C/O				COPELAND C/O			

Table E – Unit composition for EWFT XXX B Efficiency Class X (All the units are equipped with inverter fans)

Size	#Fan1	#Fan2	Circ#	comp11	comp21	comp31	comp41	comp12	comp22	comp32	comp42
EWFT250BX-C1	4	-	1	48 hp	48 hp	-	-	-	-	-	-
				COPELAND C/O				-			
EWFT320BX-C1	6	-	1	48 hp	27 hp	48 hp	-	-	-	-	-
				COPELAND C/O				-			
EWFT370BX-C1	6	-	1	48 hp	48 hp	48 hp	-	-	-	-	-
				COPELAND C/O				-			
EWFT180BX-C2	2	2	2	15 hp	15 hp	-	-	15 hp	15 hp	-	-
				DAIKIN-M				DAIKIN-M			
EWFT210BX-C2	2	2	2	15 hp	15 hp	-	-	15 hp	25 hp	-	-
				DAIKIN-M				DAIKIN-M			
EWFT230BX-C2	2	2	2	15 hp	25 hp	-	-	15 hp	25 hp	-	-
				DAIKIN-M				DAIKIN-M			
EWFT250BX-C2	2	2	2	15 hp	25 hp	-	-	25 hp	25 hp	-	-
				DAIKIN-M				DAIKIN-M			
EWFT290BX-C2	2	4	2	25 hp	25 hp	-	-	25 hp	25 hp	-	-
				DAIKIN-M				DAIKIN-M			
EWFT320BX-C2	2	4	2	15 hp	25 hp	-	-	25 hp	25 hp	25 hp	-
				DAIKIN-M				DAIKIN-M			
EWFT350BX-C2	2	4	2	25 hp	25 hp	-	-	25 hp	25 hp	25 hp	-
				DAIKIN-M				DAIKIN-M			
EWFT390BX-C2	2	4	2	27 hp	27 hp	-	-	48 hp	48 hp	-	-
				COPELAND C/O				COPELAND C/O			
EWFT450BX-C2	4	4	2	27 hp	48 hp	-	-	48 hp	48 hp	-	-
				COPELAND C/O				COPELAND C/O			
EWFT510BX-C2	4	4	2	48 hp	48 hp	-	-	48 hp	48 hp	-	-
				COPELAND C/O				-			
EWFT540BX-C2	4	6	2	27 hp	48 hp	-	-	48 hp	27 hp	48 hp	-
				COPELAND C/O				COPELAND C/O			
EWFT590BX-C2	4	6	2	48 hp	48 hp	-	-	48 hp	27 hp	48 hp	-
				COPELAND C/O				COPELAND C/O			
EWFT630BX-C2	4	6	2	48 hp	48 hp	-	-	48 hp	48 hp	48 hp	-
				COPELAND C/O				COPELAND C/O			
EWFT720BX-C2	6	6	2	48 hp	27 hp	48 hp	-	48 hp	48 hp	48 hp	-
				COPELAND C/O				COPELAND C/O			
EWFT760BX-C2	6	6	2	48 hp	48 hp	48 hp	-	48 hp	48 hp	48 hp	-
				COPELAND C/O				COPELAND C/O			
EWFT830BX-C2	6	8	2	48 hp	27 hp	48 hp	-	48 hp	48 hp	48 hp	48 hp
				COPELAND C/O				COPELAND C/O			
EWFT880BX-C2	6	8	2	48 hp	48 hp	48 hp	-	48 hp	48 hp	48 hp	48 hp
				COPELAND C/O				COPELAND C/O			
EWFTC10BX-C2	8	8	2	48 hp	48 hp	48 hp	48 hp	48 hp	48 hp	48 hp	48 hp
				COPELAND C/O				COPELAND C/O			

Table F – Unit composition for EWFT XXX M

Size	#Fan1	#Fan2	Circ#	comp11	comp21	comp31	comp41	comp12	comp22	comp32	comp42
EWAT670M-XSC2	6	6	2	48 hp	48 hp	48 hp	-	48 hp	48 hp	48 hp	-
				COPELAND C/O				COPELAND C/O			
EWAT760M-XSC2	6	8	2	48 hp	27 hp	48 hp	-	48 hp	48 hp	48 hp	48 hp
				COPELAND C/O				COPELAND C/O			
EWAT800M-XSC2	6	8	2	48 hp	48 hp	48 hp	-	48 hp	48 hp	48 hp	48 hp
				COPELAND C/O				COPELAND C/O			
EWAT900M-XSC2	8	8	2	48 hp	48 hp	48 hp	48 hp	48 hp	48 hp	48 hp	48 hp
				COPELAND C/O				COPELAND C/O			

Table G – Nominal RPM

FAN	Nom. Rpm
DAE EC Ø930 mm (BRS)	1100

Table H: Max Rpm EWAT-B-C Unit

Version	STD	OPT.229 (BRS FAN)	OPT.142A (HIGH AMBIENT KIT LIGHT)	OPT.160c (100Pa)	OPT.08 (BRINE)	OPT.42 (SPEEDTROL)
EWAT SS	DAE 6P Ø930mm **950 rpm (ON-OFF)**	DAE EC Ø930 mm **950 rpm (BRS)**	DAE EC Ø930 mm **1100 rpm (BRS)**	DAE EC Ø930mm **1100 rpm (BRS)**	DAE 6P Ø930 mm 950 rpm **(ON-OFF)**	Step 2: DAE 6P Ø930 mm 950 rpm
EWAT SR	DAE EC Ø930mm **810 rpm (BRS)**	DAE EC Ø930mm **810 rpm (BRS)**	DAE EC Ø930mm **1100 rpm (BRS)**	DAE EC Ø930mm **950 rpm (BRS)**	DAE EC Ø930 mm **810 rpm (BRS)**	NA
EWAT XS	DAE 6P Ø930mm **950 rpm (ON-OFF)**	DAE EC Ø930 mm **950 rpm (BRS)**	DAE EC Ø930mm **1100 rpm (BRS)**	DAE EC Ø930mm **1100 rpm (BRS)**	DAE 6P Ø930mm 950 rpm **(ON-OFF)**	Step 2: DAE 6P Ø930 mm 950 rpm
EWAT XR	DAE 8P Ø930mm **720 rpm (ON-OFF)**	DAE EC Ø930 mm **950 rpm (BRS)**	DAE EC Ø930 mm **1100 rpm (BRS)**	DAE EC Ø930mm **950 rpm (BRS)**	DAE 8P Ø930 mm 720 rpm **(ON-OFF)**	Step 2: DAE 8P Ø930 mm 720 rpm

Table I: Max Rpm unit DAME - EWAT-M-C

Version	STD	OP.229 (BRS FAN)	OP.142A (HIGH AMBIENT KIT LIGHT)	OP.160c (100Pa)	OP.08 (BRINE)	OP.42 (SPEEDTROL)
EWAT M XS	DAE EC Ø930 mm **1100 rpm (BRS)**	DAE EC Ø930 mm **1100 rpm (BRS)**	DAE EC Ø930 mm **1100 rpm (BRS)**	NA	DAE EC Ø930 mm **1100 rpm (BRS)**	NA

Table L: Max Rpm Freecooling unit EWFT-B-C

VERSIONE	STD	OP.229 (BRS FAN)	OP.142A (HIGH AMBIENT KIT LIGHT)	OP.160c (100Pa)	OP.08 (BRINE)	OP.42 (SPEEDTROL)
EWFT SS	DAE EC Ø930 mm **950 rpm (BRS)**	DAE EC Ø930 mm **950 rpm (BRS)**	DAE EC Ø930 mm **1100 rpm (BRS)**	NA	DAE EC Ø930 mm **950 rpm (BRS)**	NA
EWFT SR	DAE EC Ø930mm **810 rpm (BRS)**	DAE EC Ø930mm **810 rpm (BRS)**	DAE EC Ø930mm **1100 rpm (BRS)**	NA	DAE EC Ø930mm **810 rpm (BRS)**	NA
EWFT XS	DAE EC Ø930 mm **950 rpm (BRS)**	DAE EC Ø930 mm **950 rpm (BRS)**	DAE EC Ø930 mm **1100 rpm (BRS)**	NA	DAE EC Ø930 mm **950 rpm (BRS)**	NA
EWFT XR	DAE EC Ø930 mm **720 rpm (BRS)**	DAE EC Ø930 mm **720 rpm (BRS)**	DAE EC Ø930mm **1100 rpm (BRS)**	NA	DAE EC Ø930mm **720 rpm (BRS)**	NA

Table M: Pump models R32 Serie for EWAT-B-C and EWFT-B-C Silver Units

	Pump kit – Silver Unit				
	DAIKIN Model	**Single pump low lift**	**Single pump high lift**	**Twin pump low lift**	**Twin pump high lift**
SILVER MONO SS - SR	**EWAT310B-S-C1**	LNEE80-160/55	LNEE80-160/75	LNTE65-125/40	LNTE65-125/75
	EWAT350B-S-C1	LNEE80-160/55	LNEE80-160/75	LNTE65-125/40	LNTE65-125/75
SILVER DUAL SS - SR	**EWAT250B-S-C2**	LNEE50-125/30	LNEE65-125/55	LNTE65-125/40	LNTE65-125/75
	EWAT270B-S-C2	LNEE50-125/30	LNEE65-125/55	LNTE65-125/40	LNTE65-125/75
	EWAT320B-S-C2	LNEE80-160/55	LNEE80-160/75	LNTE65-125/40	LNTE65-125/75
	EWAT380B-S-C2	LNEE80-160/55	LNEE80-160/92	LNTE65-125/55	LNTE80-160/92
	EWAT430B-S-C2	LNEE80-160/75	LNEE80-160/110	LNTE65-125/75	LNTE80-160/92
	EWAT480B-S-C2	LNEE80-160/75	LNEE80-160/110	LNTE65-125/75	LNTE80-160/110
	EWAT570B-S-C2	LNEE80-160/75	LNEE80-160/110	LNTE80-160/75	LNTE80-160/110
	EWAT620B-S-C2	LNEE80-160/75	LNEE80-160/110	LNTE80-160/75	LNTE80-160/110
	EWAT670B-S-C2	LNEE80-160/75	LNEE80-160/110	LNTE100-160/110	LNTE100-160/150
	EWAT730B-S-C2	LNEE100-160/110	LNEE100-160/150	LNTE100-160/110	LNTE100-160/150
	EWAT790B-S-C2	LNEE100-160/110	LNEE100-160/150	LNTE100-160/110	LNTE100-160/150
	EWAT860B-S-C2	LNEE100-160/110	LNEE100-160/150	LNTE100-160/110	LNTE100-160/185
	EWAT960B-S-C2	LNEE100-160/110	LNEE100-160/185	LNTE100-160/150	LNTE100-160/220

Table N: Pump models R32 Serie for EWAT-B-C and EWFT-B-C GOLD Units

	Pump kit – GOLD Unit				
	DAIKIN Model	**Single pump low lift**	**Single pump high lift**	**Twin pump low lift**	**Twin pump high lift**
GOLD MONO XS - XR	**EWAT250B-X-C1**	LNEE50-125/30	LNEE65-125/55	LNTE65-125/40	LNTE65-125/75
	EWAT320B-X-C1	LNEE80-160/55	LNEE80-160/75	LNTE65-125/40	LNTE65-125/75
	EWAT370B-X-C1	LNEE80-160/55	LNEE80-160/92	LNTE65-125/55	LNTE80-160/92
GOLD DUAL XS - XR	**EWAT180B-X-C2**	LNEE50-125/30	LNEE65-125/55	LNTE50-125/30	LNTE65-125/55
	EWAT210B-X-C2	LNEE50-125/30	LNEE65-125/55	LNTE50-125/30	LNTE65-125/55
	EWAT230B-X-C2	LNEE50-125/30	LNEE65-125/55	LNTE65-125/40	LNTE65-125/75
	EWAT250B-X-C2	LNEE50-125/30	LNEE65-125/55	LNTE65-125/40	LNTE65-125/75
	EWAT290B-X-C2	LNEE80-160/55	LNEE80-160/75	LNTE65-125/40	LNTE65-125/75
	EWAT320B-X-C2	LNEE80-160/55	LNEE80-160/75	LNTE65-125/40	LNTE65-125/75
	EWAT350B-X-C2	LNEE80-160/55	LNEE80-160/92	LNTE65-125/55	LNTE65-125/75
	EWAT390B-X-C2	LNEE80-160/75	LNEE80-160/110	LNTE65-125/75	LNTE80-160/92
	EWAT450B-X-C2	LNEE80-160/75	LNEE80-160/110	LNTE65-125/75	LNTE80-160/110
	EWAT510B-X-C2	LNEE80-160/75	LNEE80-160/110	LNTE80-160/75	LNTE80-160/110
	EWAT540B-X-C2	LNEE80-160/75	LNEE80-160/110	LNTE80-160/75	LNTE80-160/110
	EWAT590B-X-C2	LNEE80-160/75	LNEE80-160/110	LNTE80-160/75	LNTE80-160/110
	EWAT630B-X-C2	LNEE80-160/75	LNEE80-160/110	LNTE80-160/75	LNTE80-160/110
	EWAT720B-X-C2	LNEE100-160/110	LNEE100-160/150	LNTE100-160/110	LNTE100-160/150
	EWAT760B-X-C2	LNEE100-160/110	LNEE100-160/150	LNTE100-160/110	LNTE100-160/150
	EWAT830B-X-C2	LNEE100-160/110	LNEE100-160/150	LNTE100-160/110	LNTE100-160/185
	EWAT880B-X-C2	LNEE100-160/110	LNEE100-160/150	LNTE100-160/110	LNTE100-160/185
	EWATC10B-X-C2	LNEE100-160/110	LNEE100-160/185	LNTE100-160/150	LNTE100-160/220

Table O: Crossed reference Pump Model – Pump Type

PUMP MODEL	PUMP TYPE
0	0
LNEE50-125/22	1
LNEE50-125/30	2
LNEE50-125/40	3
LNEE65-125/40	4
LNEE65-125/55	5
LNEE65-125/75	6
LNEE80-160/55	7
LNEE80-160/75	8
LNEE80-160/92	9
LNEE80-160/110	10
LNEE80-160/150	11
LNEE100-160/110	12
LNEE100-160/150	13
LNEE100-160/185	14
LNTE50-125/30	15
LNTE65-125/40	16
LNTE65-125/55	17
LNTE65-125/75	18
LNTE80-160/55	19
LNTE80-160/75	20
LNTE80-160/92	21
LNTE80-160/110	22
LNTE80-160/150	23
LNTE100-160/110	24
LNTE100-160/150	25
LNTE100-160/185	26
LNTE100-160/220	27
CIE370/1	28
CIE370/2	29
CIE370/3	30
CIE370/5	31
NSC 40-125/22	32
NSC 40-125/40	33
NSC 40-160/55	34

9.3 Pump VFD Settings

Table P – Pump inverter settings

DESCRIPTION	PARAMETER	SETTING	DEFAULT	Notes
Regional Settings	**0-03**	Default	[0] International	
Grid Type	**0-06**	[12] 380-440V/50Hz	[12] 380-440V/50Hz	Verify Input Voltage (V) and frequency (Hz) on R.M.
Motor Construction	**1-10**	Default	[0] Asynchron	
Motor Power	**1-20**	Default	Size Related	Verify Motor Nameplate Data
Motor Voltage	**1-22**	[400 V]	Size Related	Verify Motor Nameplate Data
Motor Frequency	**1-23**	[50 Hz]	Size Related	Verify Motor Nameplate Data
Motor Current	**1-24**	Default	Size Related	Verify Motor Nameplate Data
Motor Nominal Speed	**1-25**	See Motor Nameplate Data	Size Related	Verify Motor Nameplate Data
Flying Start	**1-73**	Default	[0] Disabled	
Minimum Reference	**3-02**	See Notes	[0]	Set 50 (Hz) to test the unit - With external reference speed (terminal 53 - 0-10V), it is factory set to 40 Hz
Maximum Reference	**3-03**	[50]	[50]	Set as 1-23 unless a different custom speed is required
Ramp 1 Ramp up Time	**3-41**	[10 s]	Size Related	time to reach 1-23 frequency
Ramp 1 Ramp Down Time	**3-42**	[10 s]	Size Related	time to stop from 1-23 frequency
Motor Speed Low Limit [Hz]	**4-12**	Default	[0 Hz]	
Motor Speed High Limit [Hz]	**4-14**	Default	[65 Hz]	
Max Output Frequency	**4-19**	Default	Size Related	
Function Relay 1	**5-40**	[9] Alarm	[0] No operation	
Function Relay 2	**5-40**	[6] Running / no warning	[1] Control ready	
Terminal 53 Low Voltage	**6-10**	Default	[0,07 V]	
Terminal 53 High Voltage	**6-11**	Default	[10 V]	
Terminal 53 Low Current	**6-12**	Default	[4 mA]	
Terminal 53 High Current	**6-13**	Default	[20 mA]	
Terminal 53 mode	**6-19**	Default	[1] Voltage mode	Current or voltage input mode [0] Current mode ; [1] Voltage mode

9.4 Pre-Commissioning Sheet

Table Q – Pre commissioning sheet

Job Name_____

Unit Model No.(s)_____

Daikin Serial Unit No_____

General	**Yes**	**No**	**N/A**
Check for external damage	❑	❑	❑
Open all **isolation and / or shut-off valves**	❑	❑	❑
Verify that the unit is pressurized with refrigerant in all of its parts before making the connection to the hydraulic circuit.	❑	❑	❑
Check the oil level in the compressors	❑	❑	❑
Control wells, thermometers, manometers, controls, etc. installed	❑	❑	❑
Availability of at least 25% of the machine load for testing and control settings	❑	❑	❑
Refrigerated water	**Yes**	**No**	**N/A**
Piping completion	❑	❑	❑
Install the **water filter** (even when not supplied) at the inlet of the exchangers.	❑	❑	❑
Install a flow switch			
Water circuit filling, air bleeding	❑	❑	❑
Pump installation, (rotation check), filter cleaning	❑	❑	❑
Operation of the controls (three-way valve, bypass valve, damper, etc.)	❑	❑	❑
Water circuit operation and flow balance	❑	❑	❑
Check that all water sensors are correctly fixed in the heat exchange	❑	❑	❑
Electrical circuit	**Yes**	**No**	**N/A**
Power cables connected to the electrical panel	❑	❑	❑
Starter and wired interlocking of the pump	❑	❑	❑
Electrical connection in compliance with local electrical regulations	❑	❑	❑
Install a main switch upstream of the unit, the main fuses and, where required by the national laws of the country of installation, a ground fault detector.	❑	❑	❑
Connect the pump contact(s) in series with the contact of the flow switch(es), so that the unit can operate only when the water pumps are running, and the water flow is sufficient.	❑	❑	❑
Provide the main voltage and check that it is within ± 10% of the classification given on the nameplate.	❑	❑	❑

Under no condition should these units be started prior to the authorized start-up by Daikin Applied. Failure to follow this warning may result in serious equipment damage and will negate the warranty. All installation work has been completed as checked above; the system has been inspected and the unit is ready for start-up

Site Engineer

Name_____

Date_____

Signature_____

9.5 Commissioning sheet

Table R – Commissioning sheet

Refer to servicesupport@daikinapplied.eu for the original form.

CHILLER COMMISSIONING SHEET for EWAT-B-C/EWFT-B-C

End user :		**Date:**	
Site:		**Model nr:**	
Distributor:		**Serial nr:**	

A PRE-POWER ON CHECK LIST

A1	Any Shipping Damage?		
A2	Is chiller adequately level mounted?		
A3	Are minimum space requirements met?		
A4	Anti vibration pads installed?		
A5	Fully Leak Test performed?		
A6	Water piping system checked?		
A7	Water Flows checked?		
A8	Glycol type / percentage		
A9	Are electrical connections correct?		
A10	Circ 1	Compressor model 1	
A11		Compressor serial 1	
A12		Compressor model 3	
A13		Compressor serial 3	
A14		Compressor model 5	
A15		Compressor model 5	
A16		Compressor model 7	
A17		Compressor serial 7	
A18	Circ 2	Compressor model 2	
A19		Compressor serial 2	
A20		Compressor model 4	
A21		Compressor serial 4	
A22		Compressor model 6	
A23		Compressor serial 6	
A24		Compressor model 8	
A25		Compressor serial 8	

B PRE-START UP CHECK LIST

B1	Flow Switch Check								
B2	Main Voltage L1-L2 [V]								
B3	Main Voltage L2-L3 [V]								
B4	Main Voltage L3-L1 [V]								
B5	Frequency [Hz]								
B6	Control Voltage Tx IN/OUT [V]	/				/			
B7	Control voltage AL1 [V]								
B8	Oil Heaters were on before start-up ?								
		C1				C2			
		Comp1	Comp3	Comp5	Comp7	Comp2	Comp4	Comp6	Comp8
B9	Check Heaters [A] (measure current)								
B10	Unit Software version								
B11	Unit settings checked ?								
B12	Circuit settings checked ?								
B13	Alarm Limits set								
B14	Evap Water Frz Alarm Setpoint [°C]								
B15	Dry Test performed ?								
B16	Check freecooling valve (Water) (Functionality)	VA				VB			
B17	Can be the chiller put into operation?								

D STARTUP CHECK LIST

D1	Running adjustment performed (Calibration)	
	Unit	
D1.1	EVAP LWT Offset	
D1.2	EVAP EWT Offset	
D1.3	OAT Offset	
D1.4	Evap Prs Offset	
	Circuit1	
D1.5	Evap Prs Offset	
D1.6	Cond Prs Offset	
D1.7	Suction Tmp Offset	
D1.8	Discharge Tmp	
D1.9	Liquid Tmp Offset	
D1.10	DsicTmp Comp1 Offset	
D1.11	DsicTmp Comp2 Offset	
D1.12	DsicTmp Comp3 Offset	
D1.13	DsicTmp Comp4 Offset	
	Circuit2	
D1.14	Evap Prs Offset	
D1.15	Cond Prs Offset	
D1.16	Suction Tmp Offset	
D1.17	Discharge Tmp	
D1.18	Liquid Tmp Offset	
D1.19	DsicTmp Comp1 Offset	
D1.20	DsicTmp Comp2 Offset	
D1.21	DsicTmp Comp3 Offset	
D1.22	DsicTmp Comp4 Offset	
D2	Safety tests performed ?	

E DATA ACQUISITION

	Operating mode:	**Chiller**						
	Percentage of Load (100% load is required)							
	Circuit:	C1				C2		
	Compressor	Comp1	Comp3	Comp5	Comp7	Comp2	Comp4	Comp6	Comp8
E1	**ELECTRICAL SYSTEM**								
E1.1	Comp running Amps L1 [A]								
E1.2	Comp running Amps L2 [A]								
E1.3	Comp running Amps L3 [A]								
E2	**REFRIGERANT SYSTEM**								
E2.1	Evaporator Pressure [kPa]								
E2.2	Condenser Pressure [kPa]								
E2.3	Suction Temperature [°C]								
E2.4	Discharge Temperature [°C]								
E2.5	Suction Superheat [°C]								
E2.6	Discharge Superheat [°C]								
E2.7	Liquid Temperature [°C]								
E2.8	Liquid Pressure [kPa]								
E2.9	Subcooling [°C]								
E2.10	Subcooling at dryer filter[°C]								
E2.11	Evaporator Approach [°C]								
E2.12	Condenser Approach [°C]								
E2.13	Oil Pressure [kPa]								
E2.14	Discharge Limit Temperature [°C]								
E2.15	EXV Position [%]								
E2.16	Fans [%]								
E2.17	Subcooler Status								
E3	**EVAPORATOR (WATER)**								
E3.1	Entering Water Temperature [°C]								
E3.2	Leaving Water Temperature [°C]								
E3.3	Evaporator Pressure Drop [kPa]							FC:	
E3.4	Design Evaporator Pressure Drop [kPa]							FC:	
E3.5	Flow Rate [l/s]							FC:	
E3.6	Design Flow rate [l/s]							FC:	
E3.7	Check Flow Swich status								
E4	**CONDENSER**								
E4.1	Outside Air Temperature [°C]								
E4.2	Outside Air Temperature [°C] - Free Cooling Mode								
E5	Operating mode:	**Free Cooling**							
E5.1	Entering Water Temperature [°C]								
E5.2	Leaving Water Temperature [°C]								
E5.3	Condenser fan [%]								

C PRE-STARTUP COMMENTS

F POST-STARTUP COMMENTS

G DEFECTIVE ITEMS FOUND AT COMMISSIONING ?

1	Parts subject to ECHC?		
2	Parts requested to be directly supplied by factory?		

Please mention under which conditions parts are directly requested to the factory (ie. Urgent matter, Extra Europe affiliate or others).

H PRESENT DURING COMMISSIONING :

Name :	***Company:***
Name :	***Company:***
Name :	***Company:***
Author:	**Installer:**
Signature:	**Signature:**
Title:	**Title:**

As Commissioning is a technical process performed - before the Chiller is put into definitive operation - by an "Authorised Engineer".
As Commissioning is done and is intended to achieve the following specific limited objectives:
- verify and document (via checklist) that the Chiller is installed according to the manufacturers installation manual and operation manual.
- configure the Chiller to a set of manufacturers defined parameters in order to secure the correct performance of the Chiller in the specific site related operating conditions.
Therefore the Commissioning process does not take away from or reduce the responsibility of the System Designers and/or Installers to provide a finished and fully functioning system.