Service manual

Split Sensira R32

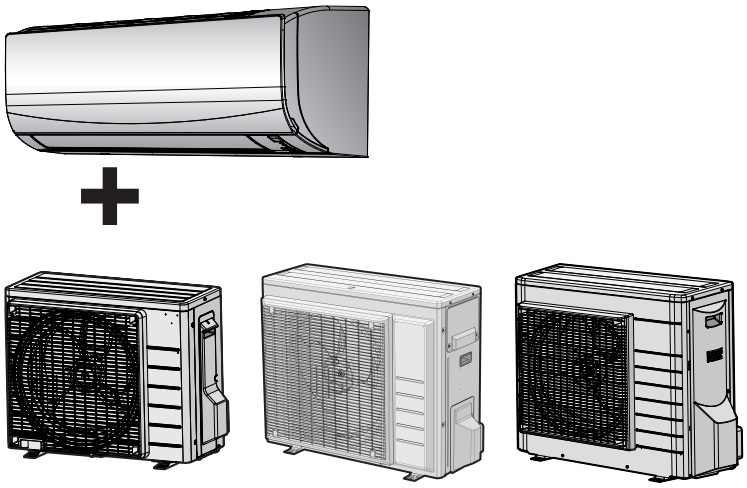

FTXF20~71A
FTXF20~25B
FTXF20~42C
FTXF20~42D
FTXF20~42E
ATXF20~71A
ATXF20~42C
ATXF20~42D
ATXF20~42E

RXF20~71A

RXF20~60B
RXF20~42C
RXF20~42D
RXF20~42E
ARXF20~71A
ARXF20~42C
ARXF20~42D
ARXF20~42E

Disclaimer

The present publication is drawn up by way of information only and does not constitute an offer binding upon Daikin Europe N.V.. Daikin Europe N.V. has compiled the content of this publication to the best of its knowledge. No express or implied warranty is given for the completeness, accuracy, reliability or fitness for particular purpose of its content and the products and services presented therein. Specifications are subject to change without prior notice. Daikin Europe N.V. explicitly rejects any liability for any direct or indirect damage, in the broadest sense, arising from or related to the use and/or interpretation of this publication. All content is copyrighted by Daikin Europe N.V..

Version log

Version code	Description	Date
ESIE18-12	Document release	October 2018
ESIE18-12B	See below	June 2019

The following updates have been applied to the Service Manual:
- Outdoor unit models RXF50B and RXF60B added.
- Indoor unit models ATXF25A and ATXF35A added.
- Technical data – Wiring diagram: Wiring diagrams for new models added.
- Technical data – Piping diagram: Piping diagrams for new models added.

Version code	Description	Date
ESIE18-12C	See below	February 2020

The following updates have been applied to the Service Manual:
- Outdoor unit models RXF20+25B added.
- Indoor unit models FTXF20+25B added.
- Inverter PCB – Checking procedures: To perform an electrical check of the inverter PCB updated.
- Outdoor unit fan motor: Checking procedures updated.
- Technical data – Wiring diagram: Wiring diagrams for new models added.
- Technical data – Piping diagram: Piping diagrams for new models added.

Version code	Description	Date
ESIE18-12D	See below	March 2020

The following updates have been applied to the Service Manual:
- Outdoor unit models ARXF20~71A added.
- Indoor unit models ATXF20A and ATXF50~71A added.
- Technical data – Wiring diagram: Wiring diagrams for new models added.
- Technical data – Piping diagram: Piping diagrams for new models added.
- Technical data – Piping diagram: Piping diagram for models RXF20+25B updated.

Version code	Description	Date
ESIE18-12E	See below	February 2021

The following updates have been applied to the Service Manual:
- Outdoor unit models RXF20~42C and ARXF20~42C added.
- Indoor unit models FTXF20~42C and ATXF20~42C added.
- Technical data – Wiring diagram: Wiring diagrams for new models added.
- Technical data – Piping diagram: Piping diagrams for new models added.
- High pressure switch – Checking procedures: To perform an electrical check of the high pressure switch updated (operating + reset pressure values added).
- 4-way valve – Checking procedures: To perform an electrical check of the 4-way valve updated.
- Main PCB: Class 20~42 unit procedures updated.
- Main PCB: Class 50~71 unit procedures added.
- Outdoor unit fan motor – Checking procedures for Class 50~71units: To perform an electrical check of the outdoor unit fan motor updated (resistance values updated)
- Indoor unit fan motor: Checking procedure updated.
- Reactors – Checking procedures: To perform an electrical check of the reactor updated.
- Reactors – Repair procedures: To remove and to install the reactor updated.
- Maintenance: To clean the indoor unit heat exchanger in extreme condition added.

Version log

Version code	Description	Date
ESIE18-12F	See below	February 2022

The following updates have been applied to the Service Manual:
- Outdoor unit models RXF20~42D and ARXF20~42D added.
- Indoor unit models FTXF20~42D and ATXF20~42D added.
- Technical data – Wiring diagram: Wiring diagrams for all outdoor units and all indoor units added.
- Technical data – Piping diagram: Piping diagrams for new models added.
- Compressor thermal protector: Checking and repair procedures added.
- Main PCB: RXF20~42D and ARXF20~42D unit procedures added.
- Outdoor unit fan motor: RXF20~42D and ARXF20~42D unit procedures added.

Version code	Description	Date
ESIE18-12G	See below	January 2023

The following updates have been applied to the Service Manual:
- Outdoor unit models RXF20~42E and ARXF20~42E added.
- Indoor unit models FTXF20~42E and ATXF20~42E added.
- Technical data – Wiring diagram: Wiring diagrams for new models added.
- Technical data – Piping diagram: Piping diagrams for new models added.
- Indoor unit fan motor: Checking and repair procedures for new models added.
- Wifi control PCB: Checking and repair procedures added.

Table of contents

1 Safety precautions 7

1.1 Meaning of warnings and symbols 7
1.2 Dangers 8
1.3 Warnings 8
1.4 Cautions 14
1.5 Notices 14

2 Troubleshooting 15

2.1 To display the error code on the user interface 15
2.2 To reset the error code via remote controller 15
2.3 To reset the error code via outdoor unit 15
2.4 To perform a test run 15
2.4.1 To perform a test run in winter season 16
2.5 Error based troubleshooting 16
2.5.1 A1-00 – PCB abnormality 16
2.5.2 A5-00 – Outdoor unit: High pressure peak cut / freeze protection problem 17
2.5.3 A6-00 – Indoor unit fan motor abnormality 18
2.5.4 C4-00 – Heat exchanger temperature sensor problem 18
2.5.5 C9-00 – Room thermistor abnormality 19
2.5.6 E1-00 – Outdoor unit: PCB defect 19
2.5.7 E3-00 – Outdoor unit: Actuation of high pressure switch 20
2.5.8 E5-00 – Outdoor unit: Overheat of inverter compressor motor 21
2.5.9 E6-00 – Outdoor unit: Compressor startup defect 22
2.5.10 E7-00 – Outdoor unit: Malfunction of outdoor unit fan motor 23
2.5.11 E8-00 – Outdoor unit: Power input overvoltage 23
2.5.12 EA-00 – Outdoor unit: Cool/heat switchover problem 24
2.5.13 F3-00 – Outdoor unit: Malfunction of discharge pipe temperature 25
2.5.14 F6-00 – Outdoor unit: Abnormal high pressure in cooling 26
2.5.15 F8-00 – System shutdown due to compressor internal temperature abnormality 27
2.5.16 H0-00 – Outdoor unit: Voltage/current sensor problem 27
2.5.17 H3-00 – Outdoor unit: Malfunction of high pressure switch 28
2.5.18 H6-00 – Outdoor unit: Malfunction of position detection sensor 29
2.5.19 H8-00 – Outdoor unit: Malfunction of compressor input system 30
2.5.20 H9-00 – Outdoor unit: Malfunction of outdoor air thermistor 30
2.5.21 J3-00 – Outdoor unit: Malfunction of discharge pipe thermistor 31
2.5.22 J6-00 – Outdoor unit: Malfunction of heat exchanger thermistor 31
2.5.23 L3-00 – Outdoor unit: Electrical box temperature rise problem 31
2.5.24 L4-00 – Outdoor unit: Malfunction of inverter radiating fin temperature rise 32
2.5.25 L5-00 – Outdoor unit: Inverter instantaneous overcurrent 33
2.5.26 P4-00 – Outdoor unit: Malfunction of radiating fin temperature sensor 34
2.5.27 U0-00 – Outdoor unit: Shortage of refrigerant 34
2.5.28 U2-00 – Outdoor unit: Defect of power supply voltage 35
2.5.29 U4-00 – Indoor/outdoor unit communication problem 36
2.5.30 UA-00 – Indoor unit, outdoor unit mismatching problem 37
2.6 Symptom based troubleshooting 39
2.6.1 Operation does not start 39
2.6.2 Operation sometimes stops 39
2.6.3 Operation starts but the unit does not cool/heat 40
2.6.4 Operating noise and vibrations 41
2.6.5 Abnormal high pressure 42
2.6.6 Abnormal low pressure 43
2.6.7 Indoor fan starts operating but the compressor does not operate 44
2.6.8 Operation starts and the unit stops immediately 45
2.6.9 Operation stops, unit cannot start for a while 45
2.6.10 Unit discharges white mist 46
2.6.11 Swing flap does not operate 46

3 Components 47

3.1 4-way valve 47
3.1.1 Checking procedures 47
3.1.2 Repair procedures 51
3.2 Compressor 54
3.2.1 Checking procedures 54
3.2.2 Repair procedures 59
3.3 Compressor thermal protector 64
3.3.1 Checking procedures 64

3.3.2 Repair procedures ... 66
3.4 Expansion valve ... 68
3.4.1 Checking procedures ... 68
3.4.2 Repair procedures ... 72
3.5 High pressure switch ... 77
3.5.1 Checking procedures ... 77
3.5.2 Repair procedures ... 79
3.6 Indoor unit fan motor ... 81
3.6.1 Checking procedures ... 81
3.6.2 Repair procedures ... 82
3.7 Indoor unit main PCB ... 84
3.7.1 Checking procedures ... 84
3.7.2 Repair procedures ... 86
3.8 Main PCB ... 89
3.8.1 Class 20~42 units ... 89
3.8.2 Class 50~71 units ... 106
3.9 Outdoor unit fan motor ... 114
3.9.1 Class 20~42 units ... 114
3.9.2 Class 50~71 units ... 119
3.10 Plate work ... 124
3.10.1 Outdoor unit ... 124
3.10.2 Indoor unit ... 130
3.11 Reactor ... 135
3.11.1 Checking procedures ... 135
3.11.2 Repair procedures ... 137
3.12 Swing flap motor ... 138
3.12.1 Checking procedures ... 138
3.12.2 Repair procedures ... 139
3.13 Thermistors ... 140
3.13.1 Refrigerant side thermistors ... 140
3.13.2 Other thermistors ... 147
3.14 Wifi control PCB ... 149
3.14.1 Checking procedures ... 149
3.14.2 Repair procedures ... 150

4 Third party components 153

4.1 Electrical circuit ... 153
4.1.1 Checking procedures ... 153
4.1.2 Repair procedures ... 154
4.2 Refrigerant circuit ... 155
4.2.1 Checking procedures ... 155
4.2.2 Repair procedures ... 159
4.3 External factors ... 163
4.3.1 Checking procedures ... 163

5 Maintenance 165

5.1 To clean the outdoor unit heat exchanger ... 165
5.2 To clean the indoor unit heat exchanger ... 165
5.3 To clean the indoor unit heat exchanger in extreme condition ... 166
5.4 To clean the air filters ... 166

6 Technical data 168

6.1 Detailed information setting mode ... 168
6.1.1 Detailed information setting mode: Indoor unit ... 168
6.1.2 Detailed information setting mode: Outdoor unit ... 168
6.1.3 Detailed information setting mode: Remote controller ... 168
6.2 Wiring diagram ... 169
6.2.1 Wiring diagram: Indoor unit ... 169
6.2.2 Wiring diagram: Outdoor unit ... 175
6.3 Piping diagram ... 185
6.3.1 Piping diagram: Indoor unit ... 185
6.3.2 Piping diagram: Outdoor unit ... 191
6.4 Component overview ... 199
6.4.1 Component overview: Indoor unit ... 199
6.4.2 Component overview: Outdoor unit ... 200
6.5 Field information report ... 201
6.6 Service tools ... 204
6.7 Field settings ... 205
6.7.1 Field settings: Indoor unit ... 205
6.7.2 Field settings: Outdoor unit ... 206

1 Safety precautions

The precautions described in this document cover very important topics, follow them carefully.

All activities described in the service manual must be performed by an authorized person.

If you are NOT sure how to install, operate or service the unit, contact your dealer.

In accordance with the applicable legislation, it might be necessary to provide a logbook with the product containing at least:

information on maintenance, repair work, results of tests, stand-by periods, …

Also, at least, following information must be provided at an accessible place at the product:

- Instructions for shutting down the system in case of an emergency
- Name and address of fire department, police and hospital
- Name, address and day and night telephone numbers for obtaining service

In Europe, EN378 provides the necessary guidance for this logbook.

1.1 Meaning of warnings and symbols

DANGER

Indicates a situation that results in death or serious injury.

DANGER: RISK OF ELECTROCUTION

Indicates a situation that could result in electrocution.

DANGER: RISK OF BURNING/SCALDING

Indicates a situation that could result in burning/scalding because of extreme hot or cold temperatures.

DANGER: RISK OF EXPLOSION

Indicates a situation that could result in explosion.

WARNING

Indicates a situation that could result in death or serious injury.

WARNING: FLAMMABLE MATERIAL

CAUTION

Indicates a situation that could result in minor or moderate injury.

NOTICE

Indicates a situation that could result in equipment or property damage.

INFORMATION

Indicates useful tips or additional information.

1.2 Dangers

DANGER: RISK OF BURNING/SCALDING

- Do NOT touch the refrigerant piping, water piping or internal parts during and immediately after operation. It could be too hot or too cold. Give it time to return to normal temperature. If you MUST touch it, wear protective gloves.
- Do NOT touch any accidental leaking refrigerant.

DANGER: RISK OF ELECTROCUTION

- Turn OFF all power supply before removing the switch box cover, connecting electrical wiring or touching electrical parts.
- Where applicable, stop the equipment's operation first and allow (refrigerant) pressure to equalize, before turning OFF the power.
- Disconnect the power supply for more than 10 minutes, and measure the voltage at the terminals of main circuit capacitors or electrical components before servicing. The voltage MUST be less than 50 V DC before you can touch electrical components. For the location of the terminals, see the wiring diagram. If the measured voltage is still higher than 50 V DC, discharge the capacitors in a safe manner by using a dedicated capacitor discharge pen to avoid possibility of sparking.
- Do NOT touch electrical components with wet hands.
- Do NOT leave the unit unattended when the service cover is removed.
- Protect electric componennts from getting wet while the service cover is opened.

1.3 Warnings

WARNING

Improper installation or attachment of equipment or accessories could result in electrical shock, short-circuit, leaks, fire or other damage to the equipment. ONLY use accessories, optional equipment and spare parts made or approved by Daikin unless otherwise specified.

WARNING

Do NOT apply any permanent inductive or capacitance loads to the circuit without ensuring that this will NOT exceed the permissible voltage and current permitted for the equipment in use.

WARNING

If a fault exists that could compromise safety, Do NOT connect electrical supply to the circuit until it is satisfactorily dealt with. If the fault CANNOT be corrected immediately but it is necessary to continue operation, an adequate temporary solution MUST be used. This MUST be reported to the owner of the equipment so all parties are advised.

Initial safety checks MUST include that:

- capacitors are discharged: this MUST be done in a safe manner to avoid possibility of sparking,
- NO live electrical components and wiring are exposed while charging, recovering or purging the system.

WARNING

Make sure that the refrigerating piping and components are installed in a position where they are unlikely to be exposed to any corroding substance.

WARNING

Make sure installation, testing and applied materials comply with applicable legislation (on top of the instructions described in the Daikin documentation).

WARNING

Make sure the work site environment is clean and safe to work in. Beware of spilled fluids, like water, oil or other substances.

Protect bystanders from injury and property from possible damage cause by service works.

WARNING

If any work is to be conducted on the refrigerating equipment or any associated parts which involves brazing, an appropriate dry powder or CO_2 fire extinguisher MUST be present.

When charging the unit, an appropriate dry powder or CO_2 fire extinguisher MUST be present.

WARNING

No person carrying out work in relation to a refrigerating system which involves exposing any pipe work shall use any sources of ignition in such a manner that it may lead to the risk of fire or explosion. All possible ignition sources, including cigarette smoking, MUST be kept sufficiently far away from the site of installation, repairing, removing and disposal, during which refrigerant can possibly be released to the surrounding space. Prior to work taking place, the area around the equipment is to be surveyed to make sure that there are no flammable hazards or ignition risks. "No Smoking" signs MUST be displayed.

WARNING

Tear apart and throw away plastic packaging bags so that nobody, especially NOT children, can play with them. **Possible consequence:** suffocation.

WARNING

During tests, NEVER pressurise the product with a pressure higher than the maximum allowable pressure (as indicated on the nameplate of the unit).

WARNING

Make sure the total refrigerant charge is in accordance with the room size in which the unit is installed: please consult the detailed instructions on charging and allowed room sizes in the installation manual.

WARNING

- NEVER mix different refrigerants or allow air to enter the refrigerant system.
- NEVER charge recovered refrigerant from another unit. Use recovered refrigerant only on the same unit where it was recovered from, or have it recycled at a certified facility.

WARNING

When reconnecting a connector to the PCB, make sure to connect it on the correct location and do NOT apply force, as this may damage the connector or connector pins of the PCB.

WARNING

ALWAYS recover the refrigerant. Do NOT release them directly into the environment. Use a vacuum pump to evacuate the installation.

WARNING

Removal of refrigerant MUST be according to the following:

When breaking into the refrigerant circuit to make repairs, be sure to remove the refrigerant from the system first. The refrigerant charge MUST be recovered into the correct recovery cylinders.

WARNING

Take sufficient precautions in case of refrigerant leakage. If refrigerant gas leaks, ventilate the area immediately. Possible risks:

- Excessive refrigerant concentrations in a closed room can lead to oxygen deficiency.
- Toxic gas might be produced if refrigerant gas comes into contact with fire.

WARNING

- Under no circumstances, potential sources of ignition SHALL be used in the searching for or detection of refrigerant leaks. A halide torch (or any other detector using a naked flame) MUST NOT be used.
- Ensure that the detector is NOT a potential source of ignition and is suitable for the detection of R32.
- If a leak is suspected, all naked flames MUST be removed or extinguished.
- Leak detection fluids are also suitable for use with most refrigerants but the use of detergents containing chlorine MUST be avoided as the chlorine may react with the refrigerant and corrode the copper pipe-work.
- If a leakage of refrigerant is found which requires brazing, all of the refrigerant MUST be recovered from the system, or isolated (by means of shut-off valves) in a part of the system remote from the leak.
- Only use the electronic leak tester for R32. The old flame leak tester CANNOT be used on a system with HFC refrigerant because there is no chlorine component in the refrigerant. In case of R32 (HFC) refrigerant, any flame in contact with (leaking) refrigerant is extremely dangerous.

WARNING

- In order to prevent oxygen deficiency and R32 combustion, keep the room well-ventilated for a healthy work environment. Do NOT work in a confined space. If a refrigerant leak is detected in a confined room or an inadequately ventilated location, do NOT start the work until the area has been ventilated appropriately.
- If the work area is NOT located in the open air, make sure the work area is adequately ventilated before breaking into the system or conducting any brazing. The ventilation MUST continue to operate during the period that the work is carried out to prevent accumulation of refrigerant in the work area. The ventilation should safely disperse any released refrigerant and preferably ventilate to the open air.

WARNING

Ensure that no external live wiring is exposed while charging, recovering or purging the system. Sparks created when live wiring is short-circuited might ignite the refrigerant if it is leaked into the room while charging, recovering or purging the system.

WARNING

Ensure that the unit is properly earthed prior to conducting maintenance or service or charging the system with refrigerant. Do NOT earth the unit to a utility pipe, surge absorber, or telephone earth. Incomplete earthing may cause electrical shock.

WARNING

- ONLY use copper wires.
- Make sure the field wiring complies with the applicable legislation.
- All field wiring MUST be performed in accordance with the wiring diagram supplied with the product.
- NEVER squeeze bundled cables and make sure they do NOT come in contact with the piping and sharp edges. Make sure no external pressure is applied to the terminal connections.
- Make sure to install earth wiring. Do NOT earth the unit to a utility pipe, surge absorber, or telephone earth. Incomplete earth may cause electrical shock.
- Make sure to use a dedicated power circuit. NEVER use a power supply shared by another appliance.
- Make sure to install the required fuses or circuit breakers.
- Make sure to install an earth leakage protector. Failure to do so may cause electrical shock or fire.
- When installing the earth leakage protector, make sure it is compatible with the inverter (resistant to high frequency electric noise) to avoid unnecessary opening of the earth leakage protector.

WARNING

Make sure the markings on the unit remain visible and legible after inspection or repair work. Markings and signs that are illegible shall be corrected.

WARNING

- After finishing the electrical work, confirm that each electrical component and terminal inside the electrical components box is connected securely.
- Make sure all covers are closed before starting up the unit.

WARNING

- The area MUST be checked with an appropriate refrigerant detector prior to and during work, to ensure the technician is aware of potentially toxic or flammable atmospheres.
- Ensure that the leak detection equipment being used is suitable for use with all applicable refrigerants, i.e. non-sparking, adequately sealed or intrinsically safe.
- Prior to and during work, the area MUST be checked with an appropriate refrigerant detector capable of detecting R32 refrigerant, to ensure a work environment free of refrigerant.

WARNING

- Equipment MUST be labelled stating that it has been de-commissioned and emptied of refrigerant.
- The label MUST be dated and signed.
- For appliances containing flammable refrigerants, ensure that there are labels on the equipment stating the equipment contains flammable refrigerant.

WARNING

Before carrying out refrigerant recovery procedure, it is essential that the technician is completely familiar with the equipment and all its details. It is recommended good practice that all refrigerants are recovered safely. Prior to the task being carried out, an oil and refrigerant sample MUST be taken in case analysis is required prior to re-use of recovered refrigerant. It is essential that electrical power is available before the task is commenced.

- Become familiar with the equipment and its operation.
- Isolate system electrically.
- Ensure that mechanical handling equipment is available, if required, for handling refrigerant cylinders.
- Ensure that all personal protective equipment is available and is used correctly.
- Ensure that the recovery process is supervised at all times by a competent person.
- Ensure that recovery equipment and cylinders are conform to the appropriate standards.
- If a vacuum is NOT possible, make a manifold so that refrigerant can be removed from various parts of the system.
- Make sure that cylinder is situated on the scales before recovery takes place.
- Start the recovery machine and operate in accordance with instructions.
- Do NOT overfill cylinders (no more than 60% volume liquid charge).
- Do NOT exceed the maximum working pressure of the cylinder, NOT even temporarily.
- When the cylinders have been filled correctly and the process completed, make sure that the cylinders and the equipment are removed from site promptly and all isolation valves on the equipment are closed.
- Recovered refrigerant MUST NOT be charged into another refrigerating system unless it has been cleaned and checked.

WARNING

All maintenance staff and others working in the local area MUST be instructed on the nature of work being carried out.

WARNING

Provide adequate measures to prevent that the unit can be used as a shelter by small animals. Small animals that make contact with electrical parts can cause malfunctions, smoke or fire.

WARNING

Prior to start working on systems containing flammable refrigerant, safety checks are necessary to ensure that the risk of ignition is minimised. Therefore, some instructions should be followed.

Please refer to the service manual for more information.

WARNING

- In case refrigerant recovery is required, use the appropriate service ports.
- If applicable for your unit, use the appropriate recovery mode or field setting to smoothly recover the refrigerant.
- ONLY use leak free hoses, couplings and manifolds in good working condition.
- ONLY use recovery cylinders designated and labelled to recover R32. Note that thread connection to the cylinder is counter clock.
- Always use a calibrated scale in good condition prior and during the refrigerant recovery process to determine the weight of the recovered refrigerant into the external refrigerant cylinder.
- Read the operation instructions of the recovery unit prior to connecting the recovery unit. Verify the recovery unit is suited for R32 refrigerant, check that it is in good working condition, has been properly maintained and that any associated electrical components are sealed to prevent ignition in the event of a refrigerant release. Consult manufacturer if in doubt.
- Do NOT overfill the refrigerant cylinder, confirm with the supplier of the refrigerant cylinder about maximum filling ratio if NOT mentioned on the refrigerant cylinder itself. Generally the maximum filling amount should be limited to 60% of the maximum volume of the cylinder.
- Do NOT exceed the maximum working pressure of the refrigerant cylinder, NOT even temporarily.
- When the cylinders have been filled correctly, and the refrigerant recovery process is completed, make sure that the cylinders and the equipment are removed from site promptly and all stop valves on the equipment are (kept) closed.
- The recovered refrigerant MUST be returned to the refrigerant supplier in the correct recovery cylinder, and the relevant waste transfer note arranged. Do NOT mix refrigerants in recovery units and especially NOT in cylinders.
- Recovered refrigerant MUST NOT be charged into another refrigerant system unless it has been cleaned and checked.

WARNING

If compressor is to be removed, ensure that the compressor has been evacuated to an acceptable level to make sure that flammable refrigerant does NOT remain within the lubricant. The evacuation process MUST be carried out prior to returning the compressor to the supplier. During the refrigerant recovery, confirm that the crankcase heater of the compressor body is energized to accelerate this process. When oil is drained from a system, it MUST be carried out safely.

WARNING

Make sure the ventilation machinery and outlets are operating adequately and are NOT obstructed.

1.4 Cautions

CAUTION

Wear adequate personal protective equipment (protective gloves, safety glasses,...) when installing, maintaining or servicing the system.

CAUTION

To avoid injury, do NOT touch the air inlet or aluminium fins of the unit.

CAUTION

- Do NOT place any objects or equipment on top of the unit.
- Do NOT sit, climb or stand on the unit.

1.5 Notices

NOTICE

- Make sure water quality complies with EU directive 2020/2184.
- Check the system for leaks after each repair/modification of the water side.
- Check drainage system(s) after repairs.
- Be careful when tilting units as water may leak.

NOTICE

Make sure refrigerant piping installation complies with applicable legislation. In Europe, EN378 is the applicable standard.

NOTICE

Make sure the field piping and connections are NOT subjected to stress.

2 Troubleshooting

2.1 To display the error code on the user interface

1 Hold CANCEL CANCEL for about 5 seconds.

Result: 00 blinks in the temperature display section.

2 Press CANCEL CANCEL repeatedly until a continuous beep is heard.

Result: The code is now displayed on the display.

> **INFORMATION**
>
> - A short beep and 2 consecutive beeps indicate non-corresponding codes.
> - To cancel the code display, hold CANCEL CANCEL for 5 seconds. The code will also disappear from the display if the button is NOT pressed within 1 minute.

2.2 To reset the error code via remote controller

Prerequisite: Problem is solved.

1 Press the ON/OFF button of the remote controller to reset the error.

2.3 To reset the error code via outdoor unit

Prerequisite: Problem is solved.

1 Perform a power reset to reset the error code.

2.4 To perform a test run

Prerequisite: Power supply MUST be in the specified range.

Prerequisite: Test run may be performed in cooling or heating mode.

Prerequisite: Test run should be performed in accordance with the operation manual of the indoor unit to make sure that all functions and parts are working properly.

1 In cooling mode, select the lowest programmable temperature. In heating mode, select the highest programmable temperature. Test run can be disabled if necessary.

2 When the test run is finished, set the temperature to a normal level. In cooling mode: 26~28°C, in heating mode: 20~24°C.

3 The system stops operating 3 minutes after the unit is turned OFF.

> **INFORMATION**
>
> - Even if the unit is turned OFF, it consumes electricity.
> - When the power turns back on after a power break, the previously selected mode will be resumed.

2.4.1 To perform a test run in winter season

When operating the air conditioner in **Cooling** mode in winter, set it to test run operation using the following method.

For FTXF and ATXF units

1. Press ON/OFF to switch the system on.
2. Press the centre of TEMP and MODE simultaneously.
3. Press MODE twice.

   Result: T̄ will appear on the display. Test run operation is selected. Test run operation will stop automatically after about 30 minutes.
4. To stop operation, press ON/OFF.

> **INFORMATION**
> Some of the functions CANNOT be used in the test run operation mode.

If a power failure occurs during operation, the system automatically restarts immediately after power is restored.

2.5 Error based troubleshooting

2.5.1 A1-00 – PCB abnormality

Trigger	Effect	Reset
The system CANNOT set the internal settings.	Unit will stop operating.	Power reset via outdoor unit.

To solve the error code

> **INFORMATION**
> It is recommended to perform the checks in the listed order.

1. Check for improper combination of the indoor unit and the outdoor unit. See the combination table in the Databook for more information.
2. Perform a check of the power supply, connections, wiring,... between the outdoor unit and the indoor unit. See "4.1 Electrical circuit" [▸ 153].

   Possible cause: Faulty wiring between the outdoor unit and the indoor unit.
3. Check if the power supply is compliant with the regulations. See "4.1 Electrical circuit" [▸ 153].

   Possible cause:
   - Faulty or disturbance of the power supply (power supply MUST be within range of nominal operating voltage ±4%),
   - Power drop,
   - Short circuit.
4. Perform a check of the indoor unit main PCB. See "3.7 Indoor unit main PCB" [▸ 84].

Possible cause: Faulty indoor unit main PCB.

> **INFORMATION**
> If all procedures listed above have been performed and the problem is still present, contact the helpdesk.

2.5.2 A5-00 – Outdoor unit: High pressure peak cut / freeze protection problem

Trigger	Effect	Reset
During cooling operation, indoor heat exchanger temperature is below 0°C (freeze-up protection control).	Unit will stop operating.	Automatic reset when temperature is within range.
During heating operation, indoor heat exchanger temperature is above 65°C (heating peak-cut control).		

To solve the error code

> **INFORMATION**
> It is recommended to perform the checks in the listed order.

1. Check for objects near the indoor unit that may block the airflow. See "4.3 External factors" [▸ 163].

   Possible cause: Airflow of the indoor unit is blocked.

2. Clean the air filter of the indoor unit(s). See "5 Maintenance" [▸ 165].

   Possible cause: Faulty or dirty air filter.

3. Clean the indoor unit heat exchanger. See "5 Maintenance" [▸ 165].

   Possible cause: Dirty indoor unit heat exchanger.

4. Perform a check of the indoor unit heat exchanger thermistor. See "3.13 Thermistors" [▸ 140].

   Possible cause: Faulty indoor unit heat exchanger thermistor.

5. Perform a check of the indoor unit main PCB. See "3.7 Indoor unit main PCB" [▸ 84].

   Possible cause: Faulty indoor unit main PCB.

> **INFORMATION**
> If all procedures listed above have been performed and the problem is still present, contact the helpdesk.

2.5.3 A6-00 – Indoor unit fan motor abnormality

Trigger	Effect	Reset
The rotation speed of the fan motor is NOT detected while the output voltage to the fan is at its maximum.	Unit will stop operating.	Power reset via the outdoor unit.

To solve the error code

INFORMATION

It is recommended to perform the checks in the listed order.

1. Perform a check of the indoor unit main PCB. See "3.7 Indoor unit main PCB" [▸ 84].

   Possible cause: Faulty indoor unit main PCB.

2. Perform a check of the indoor unit fan motor. See "3.6 Indoor unit fan motor" [▸ 81].

   Possible cause: Faulty indoor unit fan motor.

INFORMATION

If all procedures listed above have been performed and the problem is still present, contact the helpdesk.

2.5.4 C4-00 – Heat exchanger temperature sensor problem

Trigger	Effect	Reset
Refrigerant liquid thermistor detects an open or short circuit during compressor operation.	Unit will stop operating.	Power reset.

To solve the error code

INFORMATION

It is recommended to perform the checks in the listed order.

1. Perform a check of the indoor unit heat exchanger thermistor. See "3.13 Thermistors" [▸ 140].

   Possible cause: Faulty indoor unit heat exchanger thermistor.

2. Perform a check of the indoor unit main PCB. See "3.7 Indoor unit main PCB" [▸ 84].

   Possible cause: Faulty indoor unit main PCB.

INFORMATION

If all procedures listed above have been performed and the problem is still present, contact the helpdesk.

2.5.5 C9-00 – Room thermistor abnormality

Trigger	Effect	Reset
Resistance value is out of range. Temperature measured <–43.6°C or >90°C.	Unit will stop operating.	Automatic reset when resistance is within range.

To solve the error code

INFORMATION

It is recommended to perform the checks in the listed order.

1 Perform a check of the indoor unit air (room) thermistor. See "3.13 Thermistors" [▶ 140].

Possible cause: Faulty indoor unit air (room) thermistor.

2 Perform a check of the indoor unit main PCB. See "3.7 Indoor unit main PCB" [▶ 84].

Possible cause: Faulty indoor unit main PCB.

INFORMATION

If all procedures listed above have been performed and the problem is still present, contact the helpdesk.

2.5.6 E1-00 – Outdoor unit: PCB defect

Trigger	Effect	Reset
Main PCB detects that EEPROM is abnormal.	Unit will stop operating.	Manual reset via user interface.
		Power reset.

To solve the error code

INFORMATION

It is recommended to perform the checks in the listed order.

1 Perform a check of the main PCB. See "3.8 Main PCB" [▶ 89].

Possible cause: Faulty main PCB.

2 Check if the power supply is compliant with the regulations. See "4.1 Electrical circuit" [▶ 153].

Possible cause:
- Faulty or disturbance of the power supply (power supply MUST be within range of nominal operating voltage ±4%),
- Power drop,
- Short circuit.

3 Perform a check of the outdoor unit fan motor. See "3.9 Outdoor unit fan motor" [▶ 114].

Possible cause: Faulty outdoor unit fan motor.

4 Perform a check of the compressor. See "3.2 Compressor" [▶ 54].

Possible cause: Faulty compressor or miswiring of the compressor power supply cable.

Prerequisite: Stop the unit operation via the user interface.

Prerequisite: Turn OFF the respective circuit breaker.

5 Wait until the rectifier voltage is below 10 V DC.

> **DANGER: RISK OF ELECTROCUTION**
>
> Wait for at least 10 minutes after the circuit breaker has been turned OFF, to be sure the rectifier voltage is below 10 V DC before proceeding.

6 Check that the thermal interface grease is applied properly on the (PCB or refrigerant piping) contact surface of the heat sink. Adjust if needed.

Possible cause: Thermal interface grease NOT applied properly on the heat sink.

> **INFORMATION**
>
> If all procedures listed above have been performed and the problem is still present, contact the helpdesk.

2.5.7 E3-00 – Outdoor unit: Actuation of high pressure switch

Trigger	Effect	Reset
High pressure switch opens due to measured pressure above high pressure switch operating point.	Unit will stop operating.	Manual reset via user interface.
High pressure control (measured pressure just below high pressure switch operating point) occurs 16 times within 300 minutes.		

To solve the error code

> **INFORMATION**
>
> It is recommended to perform the checks in the listed order.

1 Check that all stop valves of the refrigerant circuit are open. See "4.2 Refrigerant circuit" [▸ 155].

Possible cause: Closed stop valve in the refrigerant circuit.

2 Perform a check of the high pressure switch. See "3.5 High pressure switch" [▸ 77].

Possible cause: Faulty high pressure switch.

3 Perform a check of the main PCB. See "3.8 Main PCB" [▸ 89].

Possible cause: Faulty main PCB.

4 Check if the refrigerant circuit is correctly charged. See "4.2 Refrigerant circuit" [▸ 155].

Possible cause: Refrigerant overcharge.

5 Check for the presence of non-condensables and/or humidity in the refrigerant circuit. See "4.2 Refrigerant circuit" [▶ 155].

Possible cause: Non-condensables and/or humidity in the refrigerant circuit.

6 Check if the refrigerant circuit is clogged. See "4.2 Refrigerant circuit" [▶ 155].

Possible cause: Clogged refrigerant circuit.

7 Perform a check of the outdoor unit fan motor. See "3.9 Outdoor unit fan motor" [▶ 114].

Possible cause: Faulty outdoor unit fan motor.

> **INFORMATION**
> If all procedures listed above have been performed and the problem is still present, contact the helpdesk.

2.5.8 E5-00 – Outdoor unit: Overheat of inverter compressor motor

Trigger	Effect	Reset
Compressor overload is detected.	Unit will NOT stop operating.	Automatic reset if the unit runs without warning for 60 seconds.

To solve the error code

> **INFORMATION**
> It is recommended to perform the checks in the listed order.

1 Check that all stop valves of the refrigerant circuit are open. See "4.2 Refrigerant circuit" [▶ 155].

Possible cause: Closed stop valve in the refrigerant circuit.

2 Perform a check of the discharge pipe thermistor. See "3.13 Thermistors" [▶ 140].

Possible cause: Faulty discharge pipe thermistor or connector fault.

3 Perform a check of the outdoor unit fan motor. See "3.9 Outdoor unit fan motor" [▶ 114].

Possible cause: Faulty outdoor unit fan motor.

4 Perform a check of the compressor. See "3.2 Compressor" [▶ 54].

Possible cause: Faulty compressor or miswiring of the compressor power supply cable.

5 Perform a check of the expansion valve. See "3.4 Expansion valve" [▶ 68].

Possible cause: Faulty expansion valve.

6 Perform a check of the 4-way valve. See "3.1 4-way valve" [▶ 47].

Possible cause: Faulty 4-way valve.

7 Perform a check of the main PCB. See "3.8 Main PCB" [▶ 89].

Possible cause: Faulty main PCB.

8 Check if the refrigerant circuit is correctly charged. See "4.2 Refrigerant circuit" [▶ 155].

Possible cause: Refrigerant shortage.

9 Check for the presence of non-condensables and/or humidity in the refrigerant circuit. See "4.2 Refrigerant circuit" [▸ 155].

Possible cause: Non-condensables and/or humidity in the refrigerant circuit.

10 Check if the refrigerant circuit is clogged. See "4.2 Refrigerant circuit" [▸ 155].

Possible cause: Clogged refrigerant circuit.

> **INFORMATION**
> If all procedures listed above have been performed and the problem is still present, contact the helpdesk.

2.5.9 E6-00 – Outdoor unit: Compressor startup defect

Trigger	Effect	Reset
The motor rotor does NOT rotate when the compressor is energized.	Unit will NOT stop operating.	Automatic reset after a continuous run for 10 minutes.
	Unit will stop operating	Manual reset via user interface.

To solve the error code

> **INFORMATION**
> It is recommended to perform the checks in the listed order.

1 Perform a check of the discharge pipe thermistor. See "3.13 Thermistors" [▸ 140].

Possible cause: Faulty discharge pipe thermistor or connector fault.

2 Check that all stop valves of the refrigerant circuit are open. See "4.2 Refrigerant circuit" [▸ 155].

Possible cause: Closed stop valve in the refrigerant circuit.

3 Check if the refrigerant circuit is clogged. See "4.2 Refrigerant circuit" [▸ 155].

Possible cause: Clogged refrigerant circuit.

4 Check if the refrigerant circuit is correctly charged. See "4.2 Refrigerant circuit" [▸ 155].

Possible cause: Refrigerant overcharge or shortage.

5 Check for the presence of non-condensables and/or humidity in the refrigerant circuit. See "4.2 Refrigerant circuit" [▸ 155].

Possible cause: Non-condensables and/or humidity in the refrigerant circuit.

6 Perform a check of the compressor. See "3.2 Compressor" [▸ 54].

Possible cause: Faulty compressor or miswiring of the compressor power supply cable.

7 Perform a check of the main PCB. See "3.8 Main PCB" [▸ 89].

Possible cause: Faulty main PCB.

8 Perform a check of the 4-way valve. See "3.1 4-way valve" [▸ 47].

Possible cause: Faulty 4-way valve.

9 Perform a check of the expansion valve. See "3.4 Expansion valve" [▸ 68].

Possible cause: Faulty expansion valve.

> **INFORMATION**
> If all procedures listed above have been performed and the problem is still present, contact the helpdesk.

2.5.10 E7-00 – Outdoor unit: Malfunction of outdoor unit fan motor

Trigger	Effect	Reset
Fan does NOT start 15~30 seconds after ON signal. It can occur that the error code is triggered when the fan motor is running caused by a faulty rotating sensor signal.	Unit will stop operating.	Manual reset via user interface.

To solve the error code

> **INFORMATION**
> It is recommended to perform the checks in the listed order.

1 Perform a check of the outdoor unit fan motor. See "3.9 Outdoor unit fan motor" [▸ 114].

Possible cause: Faulty outdoor unit fan motor.

2 Perform a check of the main PCB. See "3.8 Main PCB" [▸ 89].

Possible cause: Faulty main PCB.

> **INFORMATION**
> If all procedures listed above have been performed and the problem is still present, contact the helpdesk.

2.5.11 E8-00 – Outdoor unit: Power input overvoltage

Trigger	Effect	Reset
Compressor running current exceeds standard value for 2.5 seconds.	Unit will stop operating.	Manual reset via user interface.

To solve the error code

> **INFORMATION**
> It is recommended to perform the checks in the listed order.

1 Check the outdoor temperature. See "4.3 External factors" [▸ 163].

Possible cause: Outdoor temperature is out of operation range.

2 Perform a check of the compressor. See "3.2 Compressor" [▸ 54].

Possible cause: Faulty compressor or miswiring of the compressor power supply cable.

3 Perform a check of the main PCB. See "3.8 Main PCB" [▸ 89].

Possible cause: Faulty main PCB.

4 Check if the power supply is compliant with the regulations. See "4.1 Electrical circuit" [▸ 153].

Possible cause:
- Faulty or disturbance of the power supply (power supply MUST be within range of nominal operating voltage ±4%),
- Power drop,
- Short circuit.

> **INFORMATION**
> If all procedures listed above have been performed and the problem is still present, contact the helpdesk.

2.5.12 EA-00 – Outdoor unit: Cool/heat switchover problem

Trigger	Effect	Reset
Room thermistor is NOT functioning within operation range.	Unit will NOT stop operating.	Automatic reset after a continuous operation for some time.
	If the error occurs too soon: unit will stop operating.	Manual reset via user interface.

To solve the error code

> **INFORMATION**
> It is recommended to perform the checks in the listed order.

1 Perform a check of the 4-way valve. See "3.1 4-way valve" [▸ 47].

Possible cause: Faulty 4-way valve.

2 Perform a check of the main PCB. See "3.8 Main PCB" [▸ 89].

Possible cause: Faulty main PCB.

3 Perform a check of the indoor unit air (room) thermistor. See "3.13 Thermistors" [▸ 140].

Possible cause: Faulty indoor unit air (room) thermistor.

4 Perform a check of the indoor unit main PCB. See "3.7 Indoor unit main PCB" [▸ 84].

Possible cause: Faulty indoor unit main PCB.

5 Check that all stop valves of the refrigerant circuit are open. See "4.2 Refrigerant circuit" [▸ 155].

Possible cause: Closed stop valve in the refrigerant circuit.

6 Check if the refrigerant circuit is clogged. See "4.2 Refrigerant circuit" [▸ 155].

Possible cause: Clogged refrigerant circuit.

7 Check if the refrigerant circuit is correctly charged. See "4.2 Refrigerant circuit" [▶ 155].

Possible cause: Refrigerant overcharge or shortage.

8 Check for the presence of non-condensables and/or humidity in the refrigerant circuit. See "4.2 Refrigerant circuit" [▶ 155].

Possible cause: Non-condensables and/or humidity in the refrigerant circuit.

> **INFORMATION**
> If all procedures listed above have been performed and the problem is still present, contact the helpdesk.

2.5.13 F3-00 – Outdoor unit: Malfunction of discharge pipe temperature

Trigger	Effect	Reset
Discharge pipe thermistor detects a too high temperature.	Unit will NOT stop operating.	Automatic reset when temperature drops normal level.
	If the error re-occurs too soon: unit will stop operating.	Manual reset via user interface.

To solve the error code

> **INFORMATION**
> It is recommended to perform the checks in the listed order.

1 Check that all stop valves of the refrigerant circuit are open. See "4.2 Refrigerant circuit" [▶ 155].

Possible cause: Closed stop valve in the refrigerant circuit.

2 Check if the refrigerant circuit is correctly charged. See "4.2 Refrigerant circuit" [▶ 155].

Possible cause: Refrigerant overcharge or shortage.

3 Check for the presence of non-condensables and/or humidity in the refrigerant circuit. See "4.2 Refrigerant circuit" [▶ 155].

Possible cause: Non-condensables and/or humidity in the refrigerant circuit.

4 Check if the refrigerant circuit is clogged. See "4.2 Refrigerant circuit" [▶ 155].

Possible cause: Clogged refrigerant circuit.

5 Perform a check of the 4-way valve. See "3.1 4-way valve" [▶ 47].

Possible cause: Faulty 4-way valve.

6 Perform a check of the expansion valve. See "3.4 Expansion valve" [▶ 68].

Possible cause: Faulty expansion valve.

7 Perform a check of the main PCB. See "3.8 Main PCB" [▶ 89].

Possible cause: Faulty main PCB.

8 Perform a check of all refrigerant side thermistors. See "3.13 Thermistors" [▶ 140].

Possible cause: Faulty refrigerant side thermistor(s).

INFORMATION

If all procedures listed above have been performed and the problem is still present, contact the helpdesk.

2.5.14 F6-00 – Outdoor unit: Abnormal high pressure in cooling

Trigger	Effect	Reset
Outdoor heat exchanger thermistor measures a too high temperature.	Unit will NOT stop operating.	Automatic reset when temperature drops.

To solve the error code

INFORMATION

It is recommended to perform the checks in the listed order.

1. Clean the outdoor heat exchanger. See "5 Maintenance" [▸ 165].

   Possible cause: Dirty outdoor heat exchanger.

2. Check that all stop valves of the refrigerant circuit are open. See "4.2 Refrigerant circuit" [▸ 155].

   Possible cause: Closed stop valve in the refrigerant circuit.

3. Perform a check of the heat exchanger thermistor. See "3.13 Thermistors" [▸ 140].

   Possible cause: Faulty heat exchanger thermistor.

4. Perform a check of the expansion valve. See "3.4 Expansion valve" [▸ 68].

   Possible cause: Faulty expansion valve.

5. Perform a check of the main PCB. See "3.8 Main PCB" [▸ 89].

   Possible cause: Faulty main PCB.

6. Check if the refrigerant circuit is correctly charged. See "4.2 Refrigerant circuit" [▸ 155].

   Possible cause: Refrigerant overcharge.

7. Check for the presence of non-condensables and/or humidity in the refrigerant circuit. See "4.2 Refrigerant circuit" [▸ 155].

   Possible cause: Non-condensables and/or humidity in the refrigerant circuit.

8. Check if the refrigerant circuit is clogged. See "4.2 Refrigerant circuit" [▸ 155].

   Possible cause: Clogged refrigerant circuit.

9. Perform a check of the outdoor unit fan motor. See "3.9 Outdoor unit fan motor" [▸ 114].

   Possible cause: Faulty outdoor unit fan motor.

INFORMATION

If all procedures listed above have been performed and the problem is still present, contact the helpdesk.

2.5.15 F8-00 – System shutdown due to compressor internal temperature abnormality

Trigger	Effect	Reset
Temperature discharge pipe thermistor exceeds the determined limit.	Unit will stop operating.	Manual reset via user interface.

To solve the error code

INFORMATION

It is recommended to perform the checks in the listed order.

1. Check that all stop valves of the refrigerant circuit are open. See "4.2 Refrigerant circuit" [▶ 155].

   Possible cause: Closed stop valve in the refrigerant circuit.

2. Check if the refrigerant circuit is correctly charged. See "4.2 Refrigerant circuit" [▶ 155].

   Possible cause: Refrigerant overcharge.

3. Check for the presence of non-condensables and/or humidity in the refrigerant circuit. See "4.2 Refrigerant circuit" [▶ 155].

   Possible cause: Non-condensables and/or humidity in the refrigerant circuit.

4. Check if the refrigerant circuit is clogged. See "4.2 Refrigerant circuit" [▶ 155].

   Possible cause: Clogged refrigerant circuit.

5. Perform a check of the discharge pipe thermistor. See "3.13 Thermistors" [▶ 140].

   Possible cause: Faulty discharge pipe thermistor or connector fault.

INFORMATION

If all procedures listed above have been performed and the problem is still present, contact the helpdesk.

2.5.16 H0-00 – Outdoor unit: Voltage/current sensor problem

Trigger	Effect	Reset
Compressor voltage (DC) is out of range before start-up.	Unit will stop operating.	Manual reset via user interface.

To solve the error code

INFORMATION

It is recommended to perform the checks in the listed order.

1. Perform a check of the main PCB. See "3.8 Main PCB" [▶ 89].

   Possible cause: Faulty main PCB.

2. Check if the power supply is compliant with the regulations. See "4.1 Electrical circuit" [▶ 153].

Possible cause:
- Faulty or disturbance of the power supply (power supply MUST be within range of nominal operating voltage ±4%),
- Power drop,
- Short circuit.

Prerequisite: Stop the unit operation via the user interface.

Prerequisite: Turn OFF the respective circuit breaker.

3 Wait until the rectifier voltage is below 10 V DC.

> **DANGER: RISK OF ELECTROCUTION**
>
> Wait for at least 10 minutes after the circuit breaker has been turned OFF, to be sure the rectifier voltage is below 10 V DC before proceeding.

4 Check that the thermal interface grease is applied properly on the (PCB or refrigerant piping) contact surface of the heat sink. Adjust if needed.

Possible cause: Thermal interface grease NOT applied properly on the heat sink.

> **INFORMATION**
>
> If all procedures listed above have been performed and the problem is still present, contact the helpdesk.

2.5.17 H3-00 – Outdoor unit: Malfunction of high pressure switch

Trigger	Effect	Reset
High pressure switch is activated when compressor is off.	Unit will stop operating.	Manual reset via user interface.

To solve the error code

> **INFORMATION**
>
> It is recommended to perform the checks in the listed order.

1 Perform a check of the high pressure switch. See "3.5 High pressure switch" [▸ 77].

Possible cause: Faulty high pressure switch.

2 Perform a check of the main PCB. See "3.8 Main PCB" [▸ 89].

Possible cause: Faulty main PCB.

3 Check if the power supply is compliant with the regulations. See "4.1 Electrical circuit" [▸ 153].

Possible cause:
- Faulty or disturbance of the power supply (power supply MUST be within range of nominal operating voltage ±4%),
- Power drop,
- Short circuit.

INFORMATION

If all procedures listed above have been performed and the problem is still present, contact the helpdesk.

2.5.18 H6-00 – Outdoor unit: Malfunction of position detection sensor

Trigger	Effect	Reset
Compressor fails to start within 15 seconds after the compressor run command signal is sent.	Unit will NOT stop operating.	Automatic reset after a continuous operation of 10 minutes.
	If the error re-occurs within 8 minutes: unit will stop operating.	Manual reset via user interface.

To solve the error code

INFORMATION

It is recommended to perform the checks in the listed order.

1. Perform a check of the compressor. See "3.2 Compressor" [▸ 54].

   Possible cause: Faulty compressor or miswiring of the compressor power supply cable.

2. Perform a check of the main PCB. See "3.8 Main PCB" [▸ 89].

   Possible cause: Faulty main PCB.

3. Check that all stop valves of the refrigerant circuit are open. See "4.2 Refrigerant circuit" [▸ 155].

   Possible cause: Closed stop valve in the refrigerant circuit.

4. Check if the refrigerant circuit is clogged. See "4.2 Refrigerant circuit" [▸ 155].

   Possible cause: Clogged refrigerant circuit.

5. Check if the refrigerant circuit is correctly charged. See "4.2 Refrigerant circuit" [▸ 155].

   Possible cause: Refrigerant overcharge or shortage.

6. Check for the presence of non-condensables and/or humidity in the refrigerant circuit. See "4.2 Refrigerant circuit" [▸ 155].

   Possible cause: Non-condensables and/or humidity in the refrigerant circuit.

7. Check if the power supply is compliant with the regulations. See "4.1 Electrical circuit" [▸ 153].

   Possible cause:
   - Faulty or disturbance of the power supply (power supply MUST be within range of nominal operating voltage ±4%),
   - Power drop,
   - Short circuit.

INFORMATION

If all procedures listed above have been performed and the problem is still present, contact the helpdesk.

2.5.19 H8-00 – Outdoor unit: Malfunction of compressor input system

Trigger	Effect	Reset
DC voltage or current sensor abnormality based on the compressor running frequency and the input current.	Unit will NOT stop operating.	Automatic reset when compressor runs normally for 60 minutes.
	If the error re-occurs too soon: unit will stop operating.	Manual reset via user interface.

To solve the error code

> **INFORMATION**
> It is recommended to perform the checks in the listed order.

1. Perform a check of the main PCB. See "3.8 Main PCB" [▸ 89].

   Possible cause: Faulty main PCB.

2. Perform a check of the compressor. See "3.2 Compressor" [▸ 54].

   Possible cause: Faulty compressor or miswiring of the compressor power supply cable.

3. Perform a check of the reactor. See "3.11 Reactor" [▸ 135].

   Possible cause: Faulty reactor.

> **INFORMATION**
> If all procedures listed above have been performed and the problem is still present, contact the helpdesk.

2.5.20 H9-00 – Outdoor unit: Malfunction of outdoor air thermistor

Trigger	Effect	Reset
Outdoor air thermistor input is out of range.	Unit will stop operating.	Manual reset via user interface.

To solve the error code

> **INFORMATION**
> It is recommended to perform the checks in the listed order.

1. Perform a check of the outdoor air thermistor. See "3.13 Thermistors" [▸ 140].

   Possible cause: Faulty ambient air thermistor.

2. Perform a check of the main PCB. See "3.8 Main PCB" [▸ 89].

   Possible cause: Faulty main PCB.

> **INFORMATION**
> If all procedures listed above have been performed and the problem is still present, contact the helpdesk.

2.5.21 J3-00 – Outdoor unit: Malfunction of discharge pipe thermistor

Trigger	Effect	Reset
Discharge pipe thermistor input is out of range.	Unit will stop operating.	Manual reset via user interface.

To solve the error code

> **INFORMATION**
> It is recommended to perform the checks in the listed order.

1. Perform a check of the discharge pipe thermistor. See "3.13 Thermistors" [▸ 140].

   Possible cause: Faulty discharge pipe thermistor or connector fault.

2. Perform a check of the main PCB. See "3.8 Main PCB" [▸ 89].

   Possible cause: Faulty main PCB.

> **INFORMATION**
> If all procedures listed above have been performed and the problem is still present, contact the helpdesk.

2.5.22 J6-00 – Outdoor unit: Malfunction of heat exchanger thermistor

Trigger	Effect	Reset
Outdoor heat exchanger thermistor input is out of range.	Unit will stop operating.	Manual reset via user interface.

To solve the error code

> **INFORMATION**
> It is recommended to perform the checks in the listed order.

1. Perform a check of the heat exchanger thermistor. See "3.13 Thermistors" [▸ 140].

   Possible cause: Faulty heat exchanger thermistor.

2. Perform a check of the main PCB. See "3.8 Main PCB" [▸ 89].

   Possible cause: Faulty main PCB.

> **INFORMATION**
> If all procedures listed above have been performed and the problem is still present, contact the helpdesk.

2.5.23 L3-00 – Outdoor unit: Electrical box temperature rise problem

Trigger	Effect	Reset
Switch box temperature is too high.	Unit will stop operating.	Manual reset via remote controller.

To solve the error code

> **INFORMATION**
> It is recommended to perform the checks in the listed order.

1. Perform a check of the main PCB. See "3.8 Main PCB" [▸ 89].

   Possible cause: Faulty main PCB.

2. Perform a check of the outdoor unit fan motor. See "3.9 Outdoor unit fan motor" [▸ 114].

   Possible cause: Faulty outdoor unit fan motor.

3. Check if the power supply is compliant with the regulations. See "4.1 Electrical circuit" [▸ 153].

   Possible cause:
   - Faulty or disturbance of the power supply (power supply MUST be within range of nominal operating voltage ±4%),
   - Power drop,
   - Short circuit.

4. Clean the outdoor heat exchanger. See "5 Maintenance" [▸ 165].

   Possible cause: Dirty outdoor heat exchanger.

> **INFORMATION**
> If all procedures listed above have been performed and the problem is still present, contact the helpdesk.

2.5.24 L4-00 – Outdoor unit: Malfunction of inverter radiating fin temperature rise

Trigger	Effect	Reset
Radiating fin thermistor measures a too high temperature.	Unit will stop operating.	Manual reset via user interface.

To solve the error code

> **INFORMATION**
> It is recommended to perform the checks in the listed order.

1. Perform a check of the outdoor unit fan motor. See "3.9 Outdoor unit fan motor" [▸ 114].

   Possible cause: Faulty outdoor unit fan motor.

2. Check if the power supply is compliant with the regulations. See "4.1 Electrical circuit" [▸ 153].

   Possible cause:
   - Faulty or disturbance of the power supply (power supply MUST be within range of nominal operating voltage ±4%),
   - Power drop,
   - Short circuit.

3. Perform a check of the main PCB. See "3.8 Main PCB" [▸ 89].

   Possible cause: Faulty main PCB.

Prerequisite: Stop the unit operation via the user interface.

Prerequisite: Turn OFF the respective circuit breaker.

4 Wait until the rectifier voltage is below 10 V DC.

> **DANGER: RISK OF ELECTROCUTION**
>
> Wait for at least 10 minutes after the circuit breaker has been turned OFF, to be sure the rectifier voltage is below 10 V DC before proceeding.

5 Check that the thermal interface grease is applied properly on the (PCB or refrigerant piping) contact surface of the heat sink. Adjust if needed.

Possible cause: Thermal interface grease NOT applied properly on the heat sink.

> **INFORMATION**
>
> If all procedures listed above have been performed and the problem is still present, contact the helpdesk.

2.5.25 L5-00 – Outdoor unit: Inverter instantaneous overcurrent

Trigger	Effect	Reset
An output overcurrent is detected by checking the current that flows in the inverter DC section.	Unit will stop operating.	Manual reset via user interface.

To solve the error code

> **INFORMATION**
>
> It is recommended to perform the checks in the listed order.

1 Check that all stop valves of the refrigerant circuit are open. See "4.2 Refrigerant circuit" [▶ 155].

Possible cause: Closed stop valve in the refrigerant circuit.

2 Check if the refrigerant circuit is clogged. See "4.2 Refrigerant circuit" [▶ 155].

Possible cause: Clogged refrigerant circuit.

3 Check if the refrigerant circuit is correctly charged. See "4.2 Refrigerant circuit" [▶ 155].

Possible cause: Refrigerant overcharge or shortage.

4 Check for the presence of non-condensables and/or humidity in the refrigerant circuit. See "4.2 Refrigerant circuit" [▶ 155].

Possible cause: Non-condensables and/or humidity in the refrigerant circuit.

5 Perform a check of the main PCB. See "3.8 Main PCB" [▶ 89].

Possible cause: Faulty main PCB.

6 Perform a check of the compressor. See "3.2 Compressor" [▶ 54].

Possible cause: Faulty compressor or miswiring of the compressor power supply cable.

7 Check if the power supply is compliant with the regulations. See "4.1 Electrical circuit" [▶ 153].

Possible cause:
- Faulty or disturbance of the power supply (power supply MUST be within range of nominal operating voltage ±4%),
- Power drop,
- Short circuit.

Prerequisite: Stop the unit operation via the user interface.

Prerequisite: Turn OFF the respective circuit breaker.

8 Wait until the rectifier voltage is below 10 V DC.

> **DANGER: RISK OF ELECTROCUTION**
> Wait for at least 10 minutes after the circuit breaker has been turned OFF, to be sure the rectifier voltage is below 10 V DC before proceeding.

9 Check that the thermal interface grease is applied properly on the (PCB or refrigerant piping) contact surface of the heat sink. Adjust if needed.

Possible cause: Thermal interface grease NOT applied properly on the heat sink.

> **INFORMATION**
> If all procedures listed above have been performed and the problem is still present, contact the helpdesk.

2.5.26 P4-00 – Outdoor unit: Malfunction of radiating fin temperature sensor

Trigger	Effect	Reset
Radiating fin thermistor input is out of range.	Unit will stop operating.	Manual reset via user interface.

To solve the error code

> **INFORMATION**
> It is recommended to perform the checks in the listed order.

1 Perform a check of the main PCB. See "3.8 Main PCB" [▸ 89].

Possible cause: Faulty main PCB.

> **INFORMATION**
> If all procedures listed above have been performed and the problem is still present, contact the helpdesk.

2.5.27 U0-00 – Outdoor unit: Shortage of refrigerant

Trigger	Effect	Reset
Refrigerant shortage detected.	Unit will stop operating.	Automatic reset.
		Power reset via outdoor unit.

To solve the error code

> **INFORMATION**
> It is recommended to perform the checks in the listed order.

1. Perform a check of all refrigerant side thermistors. See "3.13 Thermistors" [▸ 140].

   Possible cause: Faulty refrigerant side thermistor(s).

2. Check that all stop valves of the refrigerant circuit are open. See "4.2 Refrigerant circuit" [▸ 155].

   Possible cause: Closed stop valve in the refrigerant circuit.

3. Check if the refrigerant circuit is clogged. See "4.2 Refrigerant circuit" [▸ 155].

   Possible cause: Clogged refrigerant circuit.

4. Check if the refrigerant circuit is correctly charged. See "4.2 Refrigerant circuit" [▸ 155].

   Possible cause: Refrigerant shortage.

5. Check for the presence of non-condensables and/or humidity in the refrigerant circuit. See "4.2 Refrigerant circuit" [▸ 155].

   Possible cause: Non-condensables and/or humidity in the refrigerant circuit.

6. Perform a check of the compressor. See "3.2 Compressor" [▸ 54].

   Possible cause: Faulty compressor or miswiring of the compressor power supply cable.

7. Perform a check of the expansion valve. See "3.4 Expansion valve" [▸ 68].

   Possible cause: Faulty expansion valve.

8. Check for leaks in the refrigerant circuit. Look for oil traces on the unit(s). Check the brazing points on the field piping. Perform a pressure test, see "4.2 Refrigerant circuit" [▸ 155].

   Possible cause: Leak in the refrigerant circuit.

> **INFORMATION**
> If all procedures listed above have been performed and the problem is still present, contact the helpdesk.

2.5.28 U2-00 – Outdoor unit: Defect of power supply voltage

Trigger	Effect	Reset
Power supply abnormality or instant power failure is detected.	Unit will stop operating.	Power reset via outdoor unit.

To solve the error code

> **INFORMATION**
> It is recommended to perform the checks in the listed order.

1. Check if the power supply is compliant with the regulations. See "4.1 Electrical circuit" [▸ 153].

Possible cause:
- Faulty or disturbance of the power supply (power supply MUST be within range of nominal operating voltage ±4%),
- Power drop,
- Short circuit.

2 Perform a check of the compressor. See "3.2 Compressor" [▸ 54].

Possible cause: Faulty compressor or miswiring of the compressor power supply cable.

3 Perform a check of the outdoor unit fan motor. See "3.9 Outdoor unit fan motor" [▸ 114].

Possible cause: Faulty outdoor unit fan motor.

4 Perform a check of the main PCB. See "3.8 Main PCB" [▸ 89].

Possible cause: Faulty main PCB.

5 Wait until the compressor restarts.

Possible cause:
- Momentary drop of voltage,
- Momentary power failure.

6 Perform a check of the indoor unit main PCB. See "3.7 Indoor unit main PCB" [▸ 84].

Possible cause: Faulty indoor unit main PCB.

> **INFORMATION**
> If all procedures listed above have been performed and the problem is still present, contact the helpdesk.

2.5.29 U4-00 – Indoor/outdoor unit communication problem

Trigger	Effect	Reset
Communication failure between outdoor and indoor unit.	Unit will stop operating.	Power reset via outdoor unit.

To solve the error code

> **INFORMATION**
> It is recommended to perform the checks in the listed order.

1 Check if the power supply is compliant with the regulations. See "4.1 Electrical circuit" [▸ 153].

Possible cause:
- Faulty or disturbance of the power supply (power supply MUST be within range of nominal operating voltage ±4%),
- Power drop,
- Short circuit.

2 Perform a check of the power supply, connections, wiring,... between the outdoor unit and the indoor unit. See "4.1 Electrical circuit" [▸ 153].

Possible cause: Faulty wiring between the outdoor unit and the indoor unit.

3 Perform a check of the main PCB. See "3.8 Main PCB" [▸ 89].

Possible cause: Faulty main PCB.

4 Perform a check of the outdoor unit fan motor. See "3.9 Outdoor unit fan motor" [▶ 114].

Possible cause: Faulty outdoor unit fan motor.

5 Perform a check of the indoor unit main PCB. See "3.7 Indoor unit main PCB" [▶ 84].

Possible cause: Faulty indoor unit main PCB.

Prerequisite: Stop the unit operation via the user interface.

Prerequisite: Turn OFF the respective circuit breaker.

6 Wait until the rectifier voltage is below 10 V DC.

DANGER: RISK OF ELECTROCUTION

Wait for at least 10 minutes after the circuit breaker has been turned OFF, to be sure the rectifier voltage is below 10 V DC before proceeding.

7 Check that the thermal interface grease is applied properly on the (PCB or refrigerant piping) contact surface of the heat sink. Adjust if needed.

Possible cause: Thermal interface grease NOT applied properly on the heat sink.

INFORMATION

If all procedures listed above have been performed and the problem is still present, contact the helpdesk.

2.5.30 UA-00 – Indoor unit, outdoor unit mismatching problem

Trigger	Effect	Reset
Signal transmission between outdoor and indoor unit abnormality. Improper combination of outdoor and indoor unit.	Unit will stop operating.	Power reset via outdoor unit.

To solve the error code

INFORMATION

It is recommended to perform the checks in the listed order.

1 Check for improper combination of the indoor unit and the outdoor unit. See the combination table in the Databook for more information.

2 Perform a check of the power supply, connections, wiring,... between the outdoor unit and the indoor unit. See "4.1 Electrical circuit" [▶ 153].

Possible cause: Faulty wiring between the outdoor unit and the indoor unit.

3 Perform a check of the main PCB. See "3.8 Main PCB" [▶ 89].

Possible cause: Faulty main PCB.

4 Perform a check of the indoor unit main PCB. See "3.7 Indoor unit main PCB" [▶ 84].

Possible cause: Faulty indoor unit main PCB.

INFORMATION

If all procedures listed above have been performed and the problem is still present, contact the helpdesk.

2.6 Symptom based troubleshooting

2.6.1 Operation does not start

Check	Detail
When the operation lamp is off, there is a power failure. Check the power supply.	▪ Is the power supply breaker ON? ▪ Do other electrical appliances work? ▪ Is the rated voltage (± 10%) supplied? ▪ Check the insulation of the electric system.
Check the type of the indoor unit.	Is the indoor unit type compatible with the outdoor unit?
Check the transmission between indoor and outdoor.	▪ Connection wires.
Check the outdoor temperature.	▪ Heating operation cannot be used when the outdoor temperature is 18°C WB or higher. ▪ Cooling operation cannot be used when the outdoor temperature is below −10°C DB.
When the operation lamp blinks, there may be an error code, activating the protection device. Diagnose with remote controller indication.	See "2.5 Error based troubleshooting" [▸ 16].
Check the remote controller addresses.	Are the address settings for the remote controller and indoor unit correct?
Check the operation circuit.	▪ Is the thermal fuse blown. ▪ Are wire size and wire connections OK?.
Check fan motor.	▪ Is the magnetic switch defective? ▪ Is the overcurrent relay defective?
Check compressor.	▪ Is the contact defective? ▪ Is the protection thermostat defective? ▪ Is the compressor itself defective?
Check remote controller.	▪ Are the batteries LOW? ▪ Are there incorrect settings?

2.6.2 Operation sometimes stops

Check	Detail
When the operation lamp is off, there is a power failure. Check the power supply.	▪ A power failure of 2 to 10 cycles stops air conditioner operation.

Check	Detail
Check the outdoor temperature.	▪ Heating operation cannot be used when the outdoor temperature is 18°C WB or higher. ▪ Cooling operation cannot be used when the outdoor temperature is below −10°C DB.
When the operation lamp blinks, there may be an error code, activating the protection device. Diagnose with remote controller indication.	See "2.5 Error based troubleshooting" [▸ 16].

2.6.3 Operation starts but the unit does not cool/heat

Check	Detail
Check the electrical power supply.	Is the rated voltage (± 10%) supplied?
Check for piping and wiring errors in the connection between the indoor unit and outdoor unit.	▪ Refrigerant piping is too long; is the length within specified range? ▪ Field piping is defective; is there a refrigerant leakage? ▪ Is there capacity loss over the condensor, saturation pressure or sound because of air mixed in to the circuit? ▪ Incorrect size of connection wiring.
When the operation lamp blinks, there may be a thermistor detection error code, activating the protection device.	▪ Check the resistance of all thermistors. ▪ Check the connection of all thermistors. ▪ Is there a malfunction in the room temperature thermistor or outdoor temperature thermistor?
Check for faulty operation of the electronic expansion valve.	Set the unit to cooling operation, and check the temperature of the liquid pipe to see if the electronic expansion valve works.
Diagnose by service port pressure and operating current.	Check for refrigerant shortage.
Check if the set temperature is appropriate.	thermostat "off" can be activated, set the appropriate temperature.
Check the type of the indoor and outdoor units.	Is the indoor unit type compatible with the outdoor unit?
Check the air filter.	Is the air filter clean?

Check	Detail
Check the installation conditions (specified in the installation manual).	▪ Does the installed model has sufficient capacity? ▪ Is there a short circuit air flow caused by insufficient installation space?
Check the outdoor temperature.	▪ Heating operation cannot be used when the outdoor temperature is 18°C WB or higher. ▪ Cooling operation cannot be used when the outdoor temperature is below −10°C DB.

2.6.4 Operating noise and vibrations

Check	Detail
Check the installation conditions (specified in the installation manual).	▪ Use general vibration prevention where needed. ▪ If the mounting wall is too thin, you must use cushion material or rubber, or change the installation place. ▪ Refrigerant piping is too short; is the length within specified range? ▪ Due to bad installation or general conditions there may be deformation of the unit. ▪ Are all the screws installed and tightened properly? ▪ Is all piping secured, fixed and supported by inserting a cushion material where needed? ▪ Install piping weights or correct by hand if any piping is in contact with other parts. ▪ Is the fan in contact with other parts? If so separate the fan from the other parts.
Check refrigerant charge.	▪ Is the unit filled with the specified refrigerant volume? ▪ Is there a flushing noise, due to refrigerant shortage? ▪ Is there air in the system?
Check the expansion valve.	If a passing sound is heard from the pressure reducing valve, apply sound insulation sheets of putty to reduce the valve noise.

2.6.5 Abnormal high pressure

In cooling mode

Check item	Detail
Does the outdoor unit fan run normally?	Visual inspection
Is the outdoor unit heat exchanger clogged?	Visual inspection
Is there clogging before or after the expansion valve (capillary)?	▪ Check if there is a temperature difference before and after expansion valve (capillary). ▪ Check if the main valve unit of expansion valve operates (by noise, vibration).
Is the High Pressure Switch normal?	Check continuity by using a tester.
Is the outdoor unit installed under such conditions that short circuit easily occurs?	Visual inspection
Is the piping length ≤5 m?	Visual inspection
Does air enter the refrigerant system?	Conduct refrigerant collection and vacuum drying, and then add proper amount refrigerant.
Is the refrigerant overcharged?	Conduct refrigerant collection and vacuum drying, and then add proper amount refrigerant.

In heating mode

Check item	Detail
Does the indoor unit fan run normally?	Visual inspection
Is the indoor unit heat exchanger clogged?	Visual inspection
Is the indoor unit installed under such conditions that short circuit easily occurs?	Visual inspection
Is there clogging before or after the expansion valve (capillary)?	▪ Check if there is a temperature difference before and after expansion valve (capillary). ▪ Check if the main valve unit of expansion valve operates (by noise, vibration).
Is the High Presure Switch normal?	Check continuity by using a tester.
Is the minimum piping length respected?	Visual inspection
Does air enter the refrigerant system?	Conduct refrigerant collection and vacuum drying, and then add proper amount refrigerant.

Check item	Detail
Is the refrigerant overcharged?	Conduct refrigerant collection and vacuum drying, and then add proper amount refrigerant.

2.6.6 Abnormal low pressure

Abnormally low pressure level is mostly caused by the evaporator side. The following contents are provided based on field checking of service engineer. Further, the number is listed in the order of degree of influence.

In cooling mode

Check item	Detail
Does the indoor unit fan run normally?	Visual inspection
Is the indoor unit heat exchanger clogged?	Visual inspection
Is the indoor unit installed under such conditions that short circuit easily occurs?	Visual inspection
Is there clogging before or after the expansion valve (capillary)?	▪ Check if there is a temperature difference before and after expansion valve (capillary). ▪ Check if the main valve unit of expansion valve operates (by noise, vibration).
Is the check valve (if applicable) clogged?	Check if there is a temperature difference before and after check valve. If YES, the check valve is clogged.
Is there a shortage of refrigerant?	Conduct refrigerant collection and vacuum drying, and then add proper amount refrigerant.

In heating mode

Check item	Detail
Does the outdoor unit fan run normally?	Visual inspection
Is the outdoor unit heat exchanger clogged?	Visual inspection
Is there clogging before or after the expansion valve (capillary)?	▪ Check if there is a temperature difference before and after expansion valve (capillary). ▪ Check if the main valve unit of expansion valve operates (by noise, vibration).
Is the check valve (if applicable) clogged?	Check if there is a temperature difference before and after check valve. If YES, the check valve is clogged.

Check item	Detail
Is the outdoor unit installed under such conditions that short circuit easily occurs?	Visual inspection
Is there a shortage of refrigerant?	Conduct refrigerant collection and vacuum drying, and then add proper amount refrigerant.

2.6.7 Indoor fan starts operating but the compressor does not operate

Check	Detail
Check the power supply.	▪ Is the rated voltage (± 10%) supplied? ▪ Check the insulation of the electric system.
Check the thermistor.	▪ Connection with PCB. ▪ Output.
Check PCB's HAP LED's (if applicable).	▪ if green led on the control PCB is not blinking, then the microprocessor is not working. ▪ if the green led on the main PCB is not blinking, then the microprocessor is not working. ▪ if first green LED on the service monitor PCB is not blinking, then the microprocessor is not working.
Check the magnetic switch.	
Check the power transistor.	
Check the compressor.	▪ Defective contact. ▪ Defective compressor. ▪ Defective protection thermostat.
Check the outdoor temperature.	▪ Heating operation cannot be used when the outdoor temperature is 18°C WB or higher. ▪ Cooling operation cannot be used when the outdoor temperature is below −10°C DB.

2.6.8 Operation starts and the unit stops immediately

Check	Detail
Check the power supply.	▪ Is the capacity of the safety breaker as specified? ▪ If the earth leakage breaker is too sensitive, then increase the set value of the earth leakage current of the breaker or replace the breaker. ▪ Is the circuit exclusive? ▪ Is the rated voltage (± 10%) supplied? ▪ Is there an incorrect size of connection wiring?
Check the refrigerant charge.	▪ Overcharge. ▪ Air in the system. ▪ Water in the system.
Check the fan motor.	▪ Check the magnetic switch. ▪ Check the overcurrent relay.
Check the four way valve coil.	▪ Is there a short circuit? ▪ Is the four way valve coil broken?
Check the outdoor PCB.	▪ Is there a short circuit? ▪ Is the outdoor PCB broken?
Check the heat exchanger.	Soiled heat exchanger, obstruction.
Check the airflow.	Soiled air filter, obstruction, installation space.

2.6.9 Operation stops, unit cannot start for a while

Check	Detail
Check if standby function is activated.	▪ Compressor delay timer is counting. ▪ Wait for minimum 3 minutes.
Check the power supply.	▪ Low voltage? ▪ Is the size of the power cable sufficient?
Check the refrigerant charge.	▪ Incorrect charge. ▪ Air in the system. ▪ Water in the system. ▪ Obstruction in the system.
Check compressor.	▪ Overcurrent relay. ▪ Protection thermostat.

2.6.10 Unit discharges white mist

Check	Detail
Check installation conditions.	▪ Humid site. ▪ Dirty site. ▪ Oil mist.
Check installation conditions.	Dirty heat exchanger.
Air filter.	Dirty air filter.
Fan motor.	Defective fan motor.

2.6.11 Swing flap does not operate

Symptom	Check	Detail
Swing flap does not operate	Check swing flap motor	Some functions can force the swing flap into a fixed position, although swing mode is selected on the remote controller. This is not a unit error, but a control function to prevent draft to the customer.
	Check indoor unit PCB	Connector connection

3 Components

CAUTION

When replacing a component ALWAYS make sure the correct spare part for your unit is installed.

3.1 4-way valve

3.1.1 Checking procedures

INFORMATION

It is recommended to perform the checks in the listed order.

To perform a mechanical check of the 4-way valve

Prerequisite: Stop the unit operation via the user interface.

Prerequisite: Turn OFF the respective circuit breaker.

1 Remove the required plate work, see "3.10 Plate work" [▶ 124].

DANGER: RISK OF BURNING/SCALDING

The coil gets hot while energized. Wait for it to cool down.

2 Verify that the screw is firmly fixing the coil to the valve body.

3 Check if any damage or burst is present.

Is the 4-way valve coil firmly fixed and not visually damaged?	Action
Yes	Perform an electrical check of the 4-way valve, see "3.1.1 Checking procedures" [▶ 47].
No	Fix or replace the 4-way valve coil, see "3.1.2 Repair procedures" [▶ 51].

To perform an electrical check of the 4-way valve

1 First perform a mechanical check of the 4-way valve, see "3.1.1 Checking procedures" [▶ 47].

2 Unplug the 4-way valve connector from the appropriate PCB.

3 Measure the resistance of the 4-way valve coil between the pins of the 4-way valve connector.

Result: The measured value MUST be:

Class	Resistance
Class 20~42	560 Ω ± 5%
Class 50~71	1787 Ω ± 10%

Is the measured value correct?	Action
Yes	Continue with the next step.

Is the measured value correct?	Action
No	Replace the 4-way valve coil, see "3.1.2 Repair procedures" [▶ 51].

When outdoor temperature is mild and unit can switch between heating and cooling

> **INFORMATION**
> This procedure is ONLY possible when the outdoor temperature is within the temperature range for both `Heating` and `Cooling` operation mode. See the databook on Business Portal for the temperature range of the operation modes.

1. Connect the 4-way valve connector to the appropriate PCB.
2. Turn ON the power using the respective circuit breaker.
3. Activate `Heating` operation via the user interface.
4. With the 4-way valve connector connected to the PCB, measure the voltage on the 4-way valve connection of the PCB.

   Result: The measured voltage MUST be:

Class	Voltage
Class 20~42	12 V DC
Class 50~71	220~240 V AC

> **INFORMATION**
> Actual energize voltage is ±310 V DC.12 V DC is used to keep the coil energized.

5. De-activate `Heating` and activate `Cooling` operation via the user interface.
6. Measure the voltage on the 4-way valve connection on the PCB.

   Result: The measured voltage MUST be:

Class	Voltage
Class 20~42	0 V DC
Class 50~71	0 V AC

Are the measured voltages correct?	Action
Yes	Perform a position check of the 4-way valve, see "3.1.1 Checking procedures" [▶ 47].
No	Perform a check the main PCB, see "3.8 Main PCB" [▶ 89].

When outdoor temperature does not allow the unit to run in cooling or heating mode

> **INFORMATION**
> Follow this procedure when the outdoor temperature is outside the temperature range for one of the operation modes (`Heating` or `Cooling`). The unit CANNOT operate in the mode for which the outdoor temperature is outside its temperature range. See the databook on Business Portal for the temperature range of the operation modes.

1. Connect the 4-way valve connector to the appropriate PCB.

2 Turn ON the power using the respective circuit breaker.

3 With the unit operating, connect the service monitoring tool to the unit and check whether the unit is operating in `Heating` or `Cooling` mode.

4 With the 4-way valve connector connected to the PCB, measure the voltage on the 4-way valve connection of the PCB.

Result: The measured voltage MUST be:

Class	Voltage
Class 20~42	12 V DC when operating in `Heating` mode
	0 V DC when operating in `Cooling` mode
Class 50~71	220~240 V AC when operating in `Heating` mode
	0 V AC when operating in `Cooling` mode

INFORMATION

Actual energize voltage is ±310 V DC.12 V DC is used to keep the coil energized.

Is the measured voltage correct?	Action
Yes	Perform a position check of the 4-way valve, see "3.1.1 Checking procedures" [▸ 47].
No	Perform a check the main PCB, see "3.8 Main PCB" [▸ 89].

To perform a position check of the 4-way valve

1 First perform an electrical check of the 4-way valve, see "3.1.1 Checking procedures" [▸ 47].

When outdoor temperature is mild and unit can switch between heating and cooling

INFORMATION

This procedure is ONLY possible when the outdoor temperature is within the temperature range for both `Heating` and `Cooling` operation mode. See the databook on Business Portal for the temperature range of the operation modes.

1 Activate `Heating` operation via the user interface.

INFORMATION

It is recommended to connect the service monitoring tool to the unit and verify the operation mode of the 4-way valve.

2 Check with a contact thermometer (or by touching) if the flow through the 4-way valve corresponds with the flow shown in the flow diagram. (See "6.3 Piping diagram" [▸ 185]).

Is the flow correct?	Action
Yes	Skip the next step of this procedure.

Is the flow correct?	Action
No	Perform the next step of this procedure.

3 Connect a manifold to one of the service ports of the refrigerant circuit and check the pressure (suction, discharge). Compare with normal operation conditions of the unit.

Refrigerant pressure correct?	Action
Yes	Replace the body of the 4-way valve, see "3.1.2 Repair procedures" [▸ 51].
No	Leaks may be found in the refrigerant circuit. Perform a pressure test of the refrigerant circuit, see "4.2.1 Checking procedures" [▸ 155].

4 De-activate `Heating` and activate `Cooling` operation via the user interface.

5 Check with a contact thermometer (or by touching) if the flow through the 4-way valve corresponds with the flow shown in the flow diagram. (See "6.3 Piping diagram" [▸ 185]).

Is the flow correct?	Action
Yes	4-way valve is OK. Return to the troubleshooting of the specific error and continue with the next procedure.
No	Replace the body of the 4-way valve, see "3.1.2 Repair procedures" [▸ 51].

When outdoor temperature does not allow the unit to run in cooling or heating mode

INFORMATION

Follow this procedure when the outdoor temperature is outside the temperature range for one of the operation modes (`Heating` or `Cooling`). The unit CANNOT operate in the mode for which the outdoor temperature is outside its temperature range. See the databook on Business Portal for the temperature range of the operation modes.

1 With the unit operating, connect the service monitoring tool to the unit and check whether the unit is operating in `Heating` or `Cooling` mode.

2 Check with a contact thermometer (or by touching) if the flow through the 4-way valve corresponds with the flow shown in the flow diagram of the specific operation mode. (See "6.3 Piping diagram" [▸ 185]).

Is the flow correct?	Action
Yes	4-way valve is OK. Return to the troubleshooting of the specific error and continue with the next procedure.
No	Perform the next step of this procedure.

3 Connect a manifold to one of the service ports of the refrigerant circuit and check the pressure (suction, discharge). Compare with normal operation conditions of the unit.

Refrigerant pressure correct?	Action
Yes	Replace the body of the 4-way valve, see "3.1.2 Repair procedures" [▶ 51].
No	Leaks may be found in the refrigerant circuit. Perform a pressure test of the refrigerant circuit, see "4.2.1 Checking procedures" [▶ 155].

3.1.2 Repair procedures

To remove the 4-way valve coil

Prerequisite: Stop the unit operation via the user interface.

Prerequisite: Turn OFF the respective circuit breaker.

Prerequisite: Remove the required plate work, see "3.10 Plate work" [▶ 124].

Prerequisite: If needed, remove any parts to create more space for the removal of the 4-way valve coil.

1 Remove the screw and remove the 4-way valve coil from the 4-way valve body.

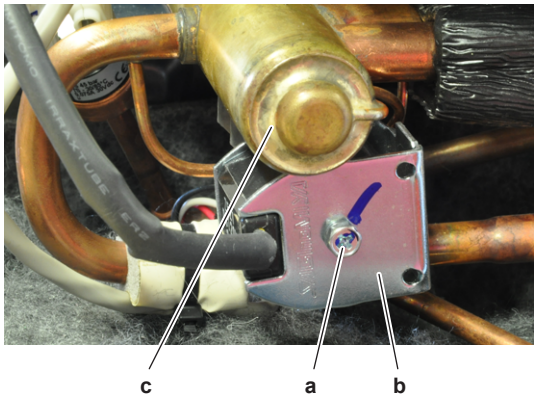

a Screw
b 4-way valve coil
c 4-way valve body

2 Cut all tie straps that fix the 4-way valve coil harness.

3 Unplug the 4-way valve connector from the appropriate PCB.

4 To install the 4-way valve coil, see "3.1.2 Repair procedures" [▶ 51].

To remove the 4-way valve body

Prerequisite: Recuperate the refrigerant from the refrigerant circuit, see "4.2.2 Repair procedures" [▶ 159].

1 Remove the 4-way valve coil from the 4-way valve body, see "3.1.2 Repair procedures" [▶ 51].

2 Remove and keep the putty (if installed) and the insulation (if installed) for re-use.

3 Supply nitrogen to the refrigerant circuit. The nitrogen pressure MUST NOT exceed 0.02 MPa.

4 Wrap a wet rag around the components near the 4-way valve pipes. Heat the brazing points of the 4-way valve pipes using an oxygen acetylene torch and remove the 4-way valve pipes from the refrigerant pipes using pliers.

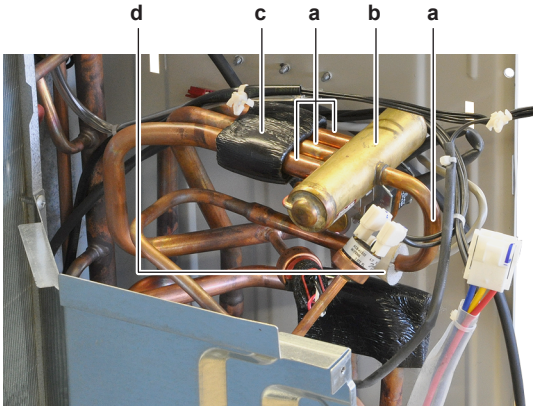

a 4-way valve pipe
b 4-way valve
c Putty
d Insulation

5 Stop the nitrogen supply when the piping has cooled down.

6 Remove the 4-way valve.

> **INFORMATION**
>
> It is ALSO possible to cut the component pipe(s) using a pipe cutter. Make sure to remove the remaining component pipe end(s) from the refrigerant pipes by heating the brazing point(s) of the component pipe(s) using an oxygen acetylene torch.

7 Install plugs or caps on the open pipe ends of the refrigerant piping to avoid dirt or impurities from entering the piping.

8 To install the 4-way valve body, see "3.1.2 Repair procedures" [▸ 51].

To install the 4-way valve body

1 Remove the plugs or caps from the refrigerant piping and make sure they are clean.

2 Remove the 4-way valve coil from the spare part 4-way valve body.

3 Install the 4-way valve body in the correct location and correctly oriented. Insert the pipe ends in the pipe expansions.

4 Supply nitrogen to the refrigerant circuit. The nitrogen pressure MUST NOT exceed 0.02 MPa.

5 Wrap a wet rag around the 4-way valve body and any other components near the 4-way valve and solder the 4-way valve pipes to the refrigerant pipes.

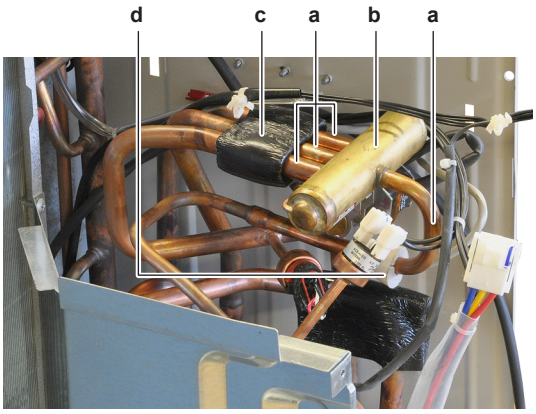

a 4-way valve pipe
b 4-way valve
c Putty
d Insulation

CAUTION

Overheating the valve will damage or destroy it.

6 After soldering is done, stop the nitrogen supply after the component has cooled-down.

7 Install the putty (if available) and the insulation (if available) in their original location.

8 Install the 4-way valve coil on the 4-way valve body, see "3.1.2 Repair procedures" [▸ 51].

9 Perform a pressure test, see "4.2.1 Checking procedures" [▸ 155].

10 Add refrigerant to the refrigerant circuit, see "4.2.2 Repair procedures" [▸ 159].

To install the 4-way valve coil

1 Install the 4-way valve coil on the 4-way valve body.

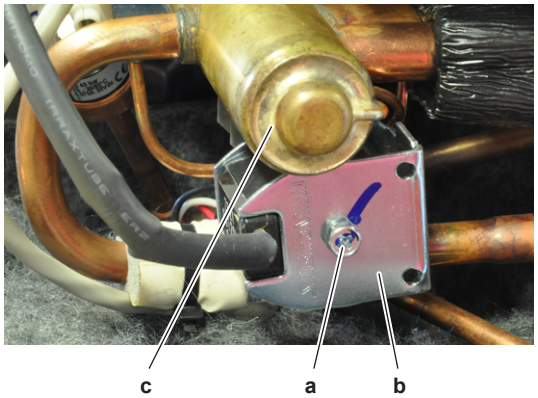

a Screw
b 4-way valve coil
c 4-way valve body

2 Install and tighten the screw to fix the 4-way valve coil.

3 Route the 4-way valve coil harness towards the appropriate PCB.

4 Connect the 4-way valve connector to the appropriate PCB.

WARNING

When reconnecting a connector to the PCB, make sure to connect it on the correct location and do NOT apply force, as this may damage the connector or connector pins of the PCB.

5 Fix the 4-way valve coil harness using new tie straps.

Is the problem solved?	Action
Yes	No further actions required.
No	Return to the troubleshooting of the specific error and continue with the next procedure.

3.2 Compressor

3.2.1 Checking procedures

INFORMATION

It is recommended to perform the checks in the listed order.

To perform an auditive check of the compressor

Prerequisite: Stop the unit operation via the user interface.

Prerequisite: Turn OFF the respective circuit breaker.

Prerequisite: Remove the required plate work, see "3.10 Plate work" [▸ 124].

1. Open the compressor insulation.
2. Turn ON the power using the respective circuit breaker.
3. Start the unit operation via the user interface.
4. Wait for - or create condition to operate the compressor.
5. Listen to the compressor when it tries to operate. Judge if a mechanical lock is present.

INFORMATION

If you have a multimeter with data logging functionality, record the current in 1 of the U-V-W wires at compressor start-up. If mechanical lock is present, logged current will drastically increase to a peak value and the unit will trigger an error.

INFORMATION

If a mechanical lock is present, also check and eliminate the root cause. Mechanical lock is most likely caused by lack of lubrication (which might be related to overheat or wet operation), failing crankcase heater (if available), impurities in the refrigerant, ...

A mechanical lock is present on the compressor?	Action
Yes	Replace the compressor, see "3.2.2 Repair procedures" [▸ 59].
No	Perform an mechanical check of the compressor, see "3.2.1 Checking procedures" [▸ 54].

To perform a mechanical check of the compressor

Prerequisite: First perform an auditive check of the compressor, see "3.2.1 Checking procedures" [▸ 54].

Prerequisite: Stop the unit operation via the user interface.

Prerequisite: Turn OFF the respective circuit breaker.

1. Before proceeding:

DANGER: RISK OF ELECTROCUTION

Wait for at least 10 minutes after the circuit breaker has been turned OFF, to be sure the rectifier voltage is below 10 V DC before proceeding.

2 Visually check:
   - For oil drops around the compressor. Locate and fix as needed.
   - Pipes for signs of damage. Replace pipes as needed.

3 Check that the compressor bolts are correctly fixed. Fix as needed.

4 Check that the compressor wire terminals cover is correctly installed and fixed. Correct as needed.

5 Check the compressor dampers for any damage.

a Damper

> **INFORMATION**
> The compressor dampers may look different.

Compressor dampers are in a good condition?	Action
Yes	Perform an electrical check of the compressor, see "3.2.1 Checking procedures" [▸ 54].
No	Replace the compressor and/or damaged dampers, see "3.2.2 Repair procedures" [▸ 59].

To perform an electrical check of the compressor

1 First perform a mechanical check of the compressor, see "3.2.1 Checking procedures" [▸ 54].

> **DANGER: RISK OF ELECTROCUTION**
> Wait for at least 10 minutes after the circuit breaker has been turned OFF, to be sure the rectifier voltage is below 10 V DC before proceeding.

2 Remove the cover of the compressor wire terminals.

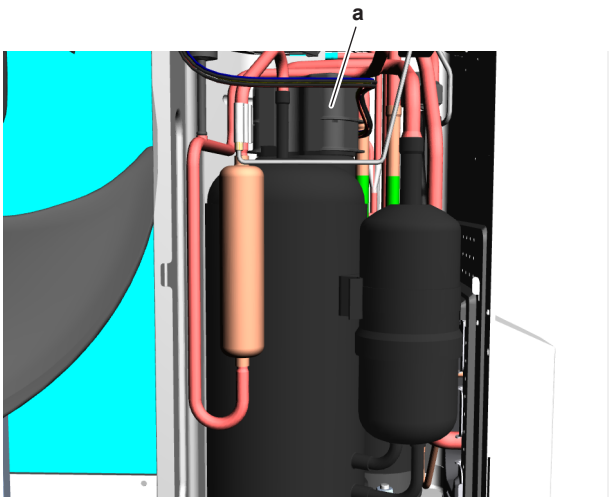

a Compressor wire terminals cover

3 Disconnect the Faston connectors from the compressor wire terminals U, V and W.

> **INFORMATION**
>
> Note the position of the Faston connectors on the compressor wire terminals to allow correct connection during installation.

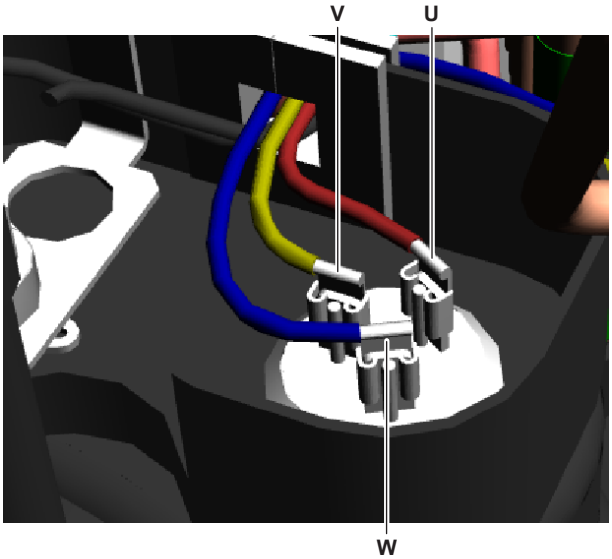

U Wire terminal U
V Wire terminal V
W Wire terminal W

> **CAUTION**
>
> Before measuring the compressor motor windings resistance, measure the resistance of the multimeter probes by holding the probes against each other. If the measured resistance is NOT 0 Ω, this value MUST be subtracted from the measured winding resistance.

4 Measure the resistance between the compressor motor windings U-V, V-W and U-W.

Result: All measurements MUST be approximately the same.

Compressor motor winding measurements are correct?	Action
Yes	Continue with the next step.
No	Replace the compressor, see "3.2.2 Repair procedures" [▶ 59].

5 Measure the continuity of the U, V and W wires between the compressor and the PCB. If no continuity, correct as needed, see "6.2 Wiring diagram" [▶ 169].

6 Connect the Faston connectors to the compressor wire terminals U, V and W

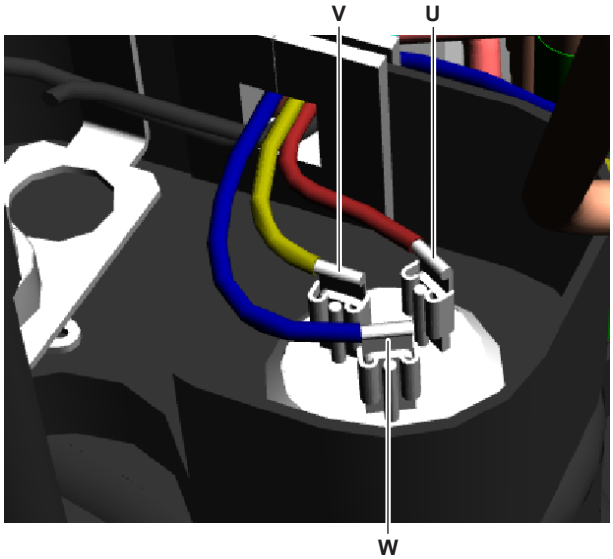

U Wire terminal U
V Wire terminal V
W Wire terminal W

7 Install the compressor wire terminals cover.

8 Install the compressor insulation.

9 Turn ON the power using the respective circuit breaker.

10 Start the unit operation via the user interface.

CAUTION

NEVER operate the compressor with the compressor wire terminals cover removed.

11 Wait for – or create condition to operate the compressor.

12 Once the compressor operates, measure the U-V-W inverter voltages. ALWAYS measure at the PCB side.

Result: All measurements MUST be the same.

Inverter voltage measurements are correct?	Action
Yes	Continue with the next step.
No	Perform a check of the appropriate PCB, see "3 Components" [▶ 47].

13 While compressor is operating, measure the current in each phase U, V and W. ALWAYS measure at the PCB side.

Result: All measurements MUST be the same.

Compressor motor winding current measurements are correct?	Action
Yes	Perform an insulation check of the compressor, see "3.2.1 Checking procedures" [▸ 54].
No	Preventively replace the compressor, see "3.2.2 Repair procedures" [▸ 59].

To perform an insulation check of the compressor

Prerequisite: First perform an electrical check of the compressor, see "3.2.1 Checking procedures" [▸ 54].

Prerequisite: Stop the unit operation via the user interface.

Prerequisite: Turn OFF the respective circuit breaker.

1 Before proceeding:

> **DANGER: RISK OF ELECTROCUTION**
>
> Wait for at least 10 minutes after the circuit breaker has been turned OFF, to be sure the rectifier voltage is below 10 V DC before proceeding.

2 Remove the cover of the compressor wire terminals.

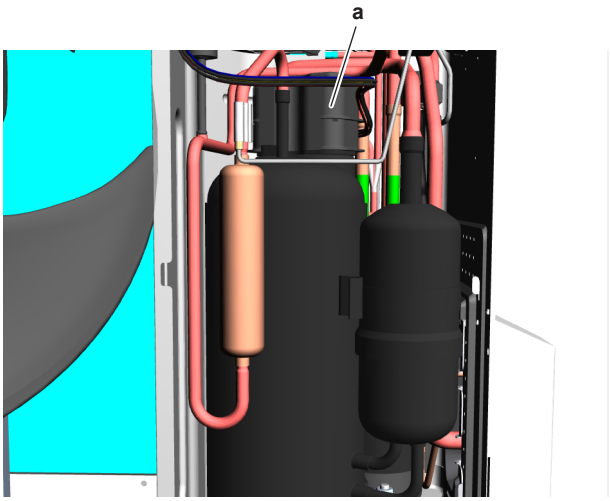

a Compressor wire terminals cover

3 Disconnect the Faston connectors from the compressor wire terminals U, V and W.

> **INFORMATION**
>
> Note the position of the Faston connectors on the compressor wire terminals to allow correct connection during installation.

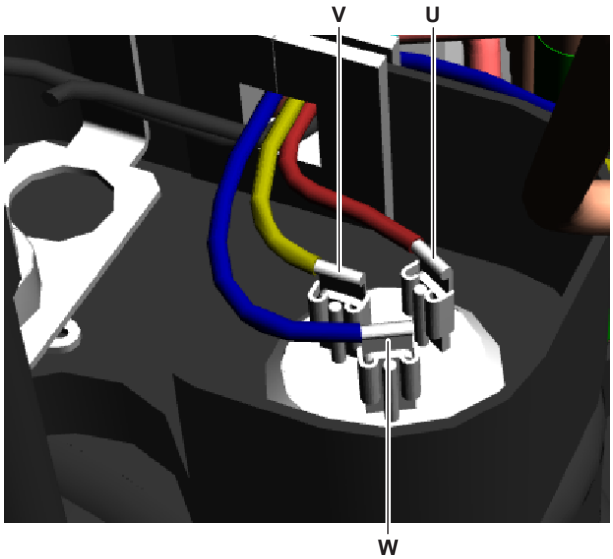

U Wire terminal U
V Wire terminal V
W Wire terminal W

4 Set the Megger voltage to 500 V DC or 1000 V DC.

5 Measure the insulation resistance between the following terminals. The measured insulation resistance MUST be >3 MΩ.

- U–ground,
- V–ground,
- W–ground.

Compressor insulation measurements are correct?	Action
Yes	Compressor is OK. Return to troubleshooting of the specific error and continue with the next procedure.
No	Replace the compressor, see "3.2.2 Repair procedures" [▶ 59].

3.2.2 Repair procedures

To remove the compressor

Prerequisite: Stop the unit operation via the user interface.

Prerequisite: Turn OFF the respective circuit breaker.

Prerequisite: Remove the required plate work, see "3.10 Plate work" [▶ 124].

Prerequisite: Remove the compressor insulation.

Prerequisite: Recuperate the refrigerant from the refrigerant circuit, see "4.2.2 Repair procedures" [▶ 159].

1 If needed, remove any parts to create more space for the removal of the compressor.

DANGER: RISK OF ELECTROCUTION

Wait for at least 10 minutes after the circuit breaker has been turned OFF, to be sure the rectifier voltage is below 10 V DC before proceeding.

2 Remove the cover of the compressor wire terminals.

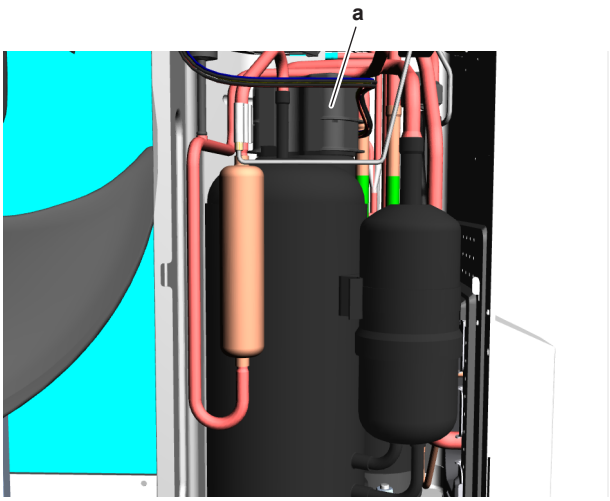

a Compressor wire terminals cover

3 Disconnect the Faston connectors from the compressor wire terminals U, V and W.

> **INFORMATION**
>
> Note the position of the Faston connectors on the compressor wire terminals to allow correct connection during installation.

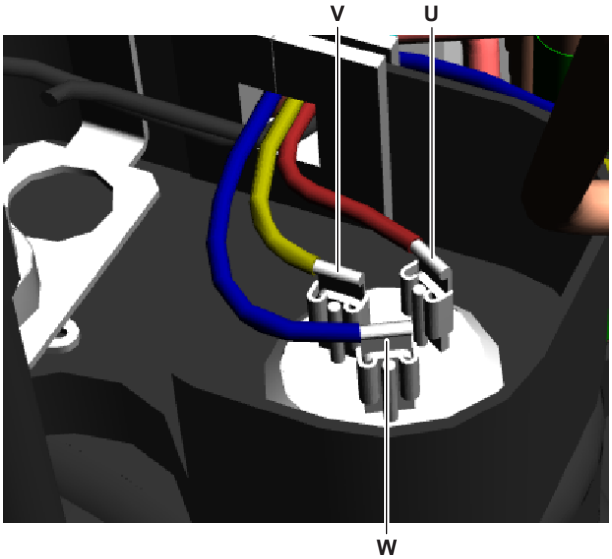

U Wire terminal U
V Wire terminal V
W Wire terminal W

4 If applicable, remove the screw and disconnect the ground wire from the compressor.

5 Remove the compressor thermal protector, see "To remove the compressor thermal protector" [▸ 66].

6 Remove the following thermistors from their holder:

- Suction thermistor
- Discharge pipe thermistor
- Compressor body thermistor (if applicable)

7 Supply nitrogen to the refrigerant circuit. The nitrogen pressure MUST NOT exceed 0.02 MPa.

8 Wrap a wet rag around the components near the compressor pipes. Heat the brazing points of the compressor pipes using an oxygen acetylene torch and remove the refrigerant pipes from the compressor pipes using pliers.

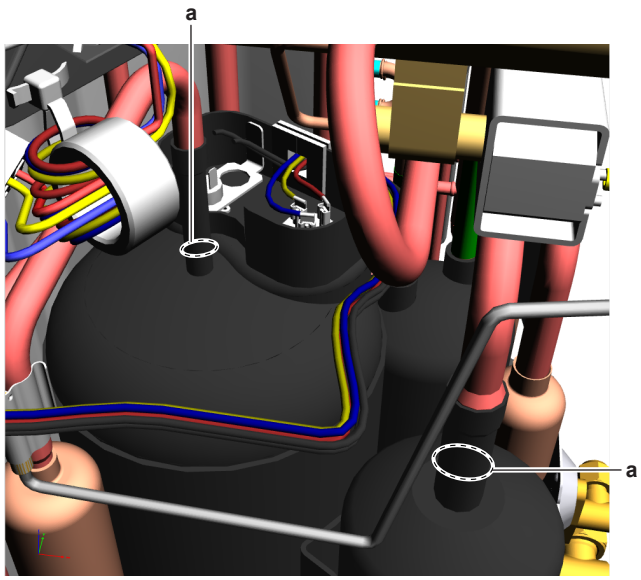

a Compressor pipe

9 Stop the nitrogen supply when the piping has cooled down.

> **INFORMATION**
>
> It is ALSO possible to cut the component pipe(s) using a pipe cutter. Make sure to remove the remaining component pipe end(s) from the refrigerant pipes by heating the brazing point(s) of the component pipe(s) using an oxygen acetylene torch.

10 Remove the nuts and bolts and remove the compressor from the unit.

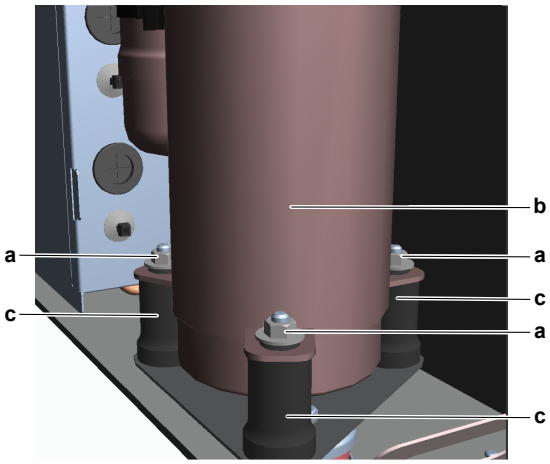

a Nut
b Compressor
c Damper

11 Remove the 3 dampers from the compressor.

> **INFORMATION**
>
> The compressor dampers may look different.

12 Remove the bushings and keep them for re-use.

13 Install plugs or caps on the open pipe ends of the refrigerant piping to avoid dirt or impurities from entering the piping.

14 To install the compressor, see "3.2.2 Repair procedures" [▸ 59].

To install the compressor

1 Check the state of the dampers. Replace if worn.

2 Install the 3 dampers in the correct location on the unit.

3 Remove the plugs or caps from the refrigerant piping and make sure they are clean.

4 Remove the caps from the compressor pipes (of the new compressor).

> **CAUTION**
>
> The oil in the compressor is hygroscopic. Therefore remove the caps from the compressor pipes as late as possible.

5 Install the compressor on the correct location on the dampers. Properly insert the refrigerant pipes in the pipe expansions of the compressor pipes.

6 Install and tighten the bolts and nuts to fix the compressor to the dampers.

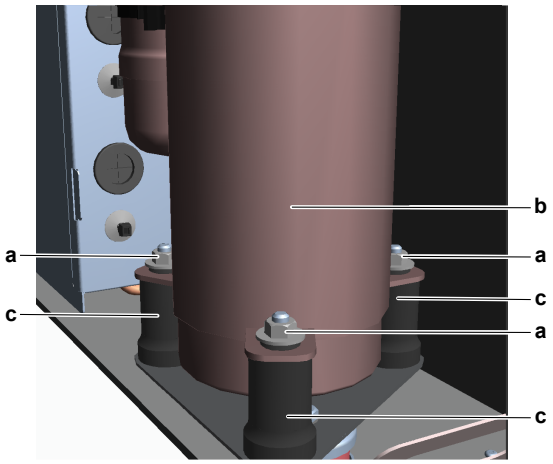

a Nut
b Compressor
c Damper

> **INFORMATION**
>
> The compressor dampers may look different.

7 Supply nitrogen to the refrigerant circuit. The nitrogen pressure MUST NOT exceed 0.02 MPa.

8 Wrap a wet rag around the compressor pipes and any other components near the compressor and solder the compressor pipes to the refrigerant pipes.

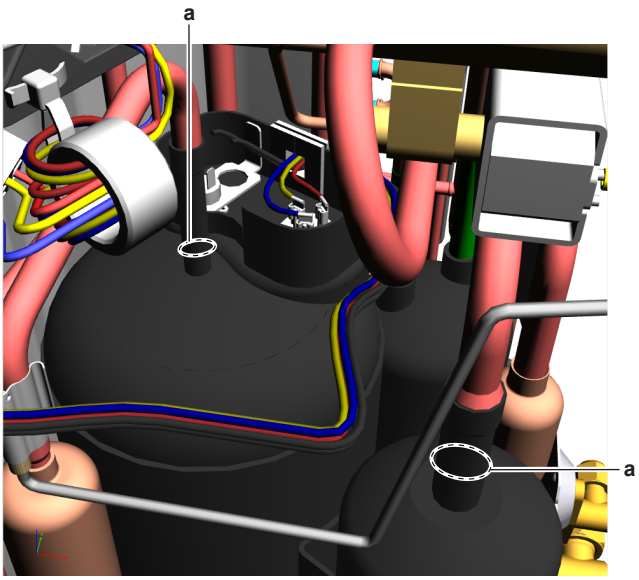

a Compressor pipe

> **CAUTION**
>
> Overheating the compressor pipes (and the oil inside the compressor pipes) will damage or destroy the compressor.

9 After soldering is done, stop the nitrogen supply after the component has cooled-down.

10 Install the compressor thermal protector, see "To install the compressor thermal protector" [▸ 67].

11 Connect the Faston connectors to the compressor wire terminals U, V and W

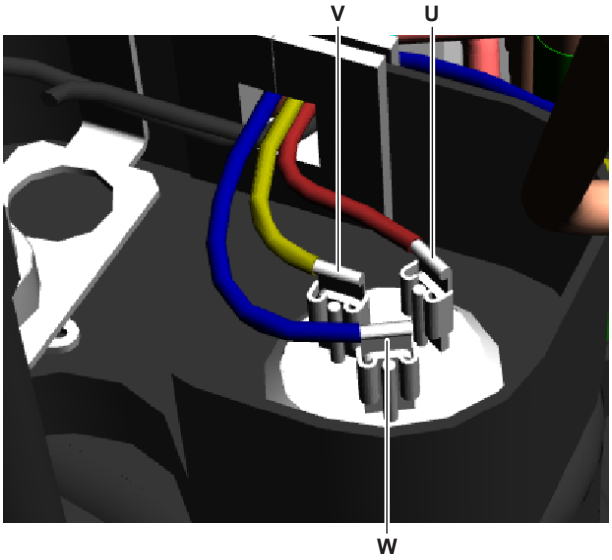

U Wire terminal U
V Wire terminal V
W Wire terminal W

12 Install the cover of the compressor wire terminals.

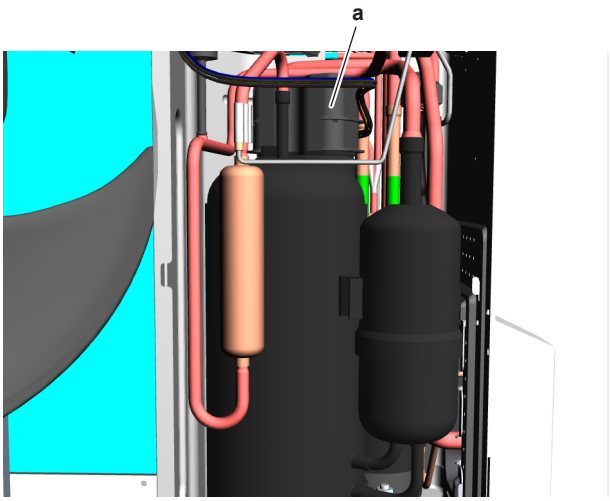

a Compressor wire terminals cover

13 If applicable, connect the ground wire to the compressor. Install and tighten the screw to fix the ground wire.

14 Install the following thermistors in their holder:

- Suction thermistor
- Discharge pipe thermistor
- Compressor body thermistor (if applicable)

15 Install the compressor insulation, see "3.2.2 Repair procedures" [▶ 59].

16 Perform a pressure test, see "4.2.1 Checking procedures" [▶ 155].

17 Add refrigerant to the refrigerant circuit, see "4.2.2 Repair procedures" [▶ 159].

Is the problem solved?	Action
Yes	No further actions required.
No	Return to the troubleshooting of the specific error and continue with the next procedure.

3.3 Compressor thermal protector

3.3.1 Checking procedures

To perform a mechanical check of the compressor thermal protector

Prerequisite: Stop the unit operation via the user interface.

Prerequisite: Turn OFF the respective circuit breaker.

Prerequisite: Remove the required plate work, see "3.10 Plate work" [▶ 124].

Prerequisite: Remove the compressor insulation.

1 Remove the cover of the compressor wire terminals.

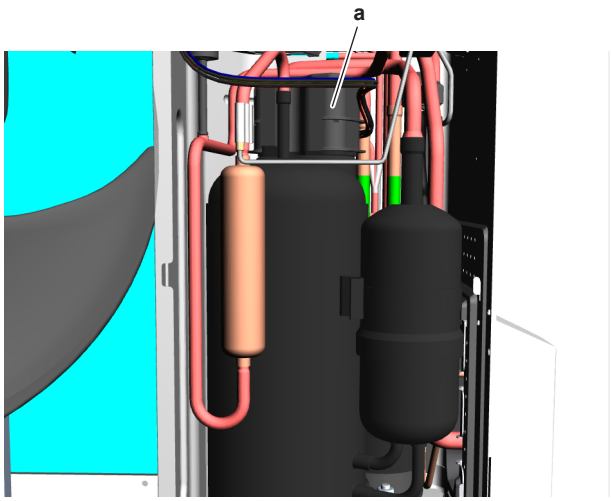

a Compressor wire terminals cover

2 Remove the compressor thermal protection with bracket from the compressor.

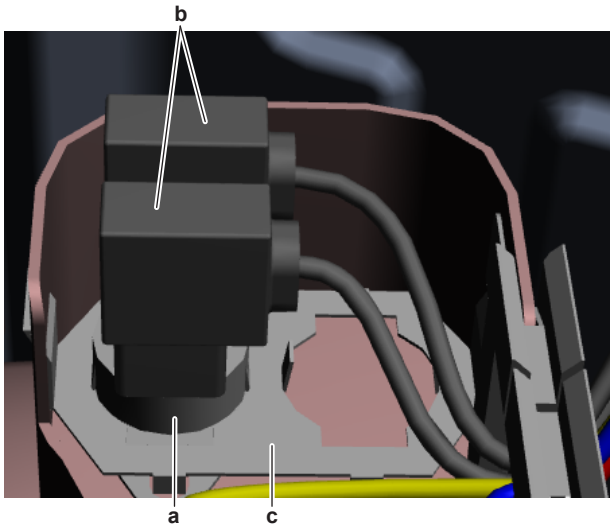

a Compressor thermal protector
b Faston connector
c Bracket

3 If in doubt, measure the temperature of the compressor thermal protection.

Result: The temperature MUST be below 85°C.

4 Disconnect the Faston connectors from the compressor thermal protection.

> **INFORMATION**
>
> Make sure that the wiring between the compressor thermal protector and the connector on the PCB is properly connected and NOT damaged (check continuity), see "6.2 Wiring diagram" [▸ 169].
>
> For (A)RXF20~35A, RXF20+25B, (A)RXF20~42C and (A)RXF42D units ONLY: Make sure that the high pressure switch (which is wired in series with the compressor thermal protector) functions correctly, see "3.5.1 Checking procedures" [▸ 77].

5 Using a hot air gun, carefully heat the compressor thermal protection to slightly above 123°C (compressor thermal protection trips at 117~123°C).

6 Measure the resistance on the compressor thermal protector.

Result: The contact MUST be open (measured resistance = OL).

7 Let the compressor thermal protection cool down below 85°C (reset temperature is 85~105°C).

8 Again measure the resistance on the compressor thermal protector.

Result: The contact MUST be closed (measured resistance = 0 Ω).

Does the compressor thermal protector contact open and close at the correct temperature?	Action
Yes	Return to the troubleshooting of the specific error and continue with the next procedure.
No	Replace the compressor thermal protector, see "3.3.2 Repair procedures" [▸ 66].

3.3.2 Repair procedures

To remove the compressor thermal protector

Prerequisite: Stop the unit operation via the user interface.

Prerequisite: Turn OFF the respective circuit breaker.

Prerequisite: Remove the required plate work, see "3.10 Plate work" [▸ 124].

Prerequisite: Remove the compressor insulation.

1 Remove the cover of the compressor wire terminals.

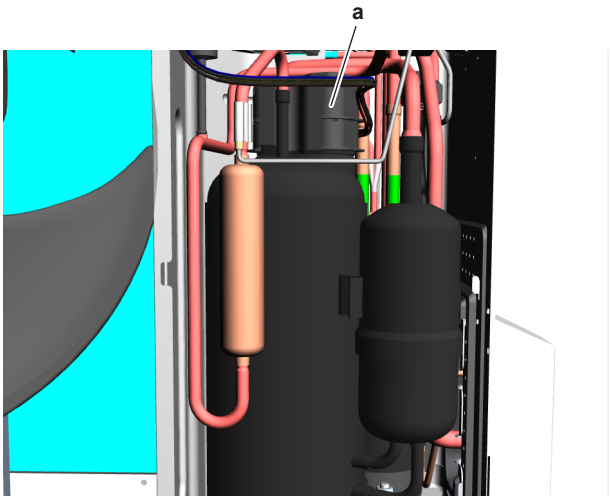

a Compressor wire terminals cover

2 Remove the compressor thermal protector with bracket from the compressor housing.

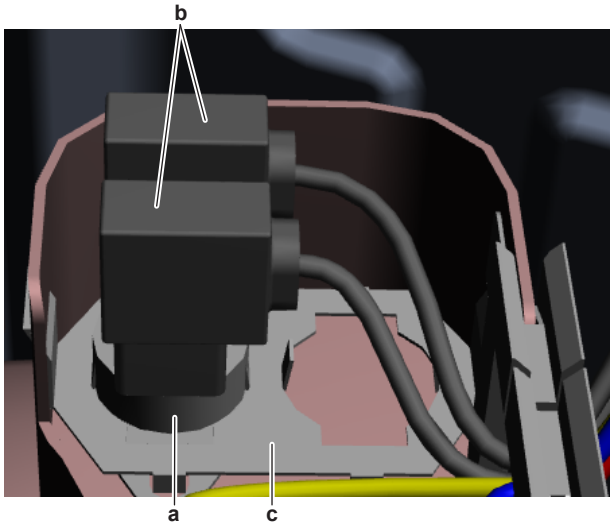

a Compressor thermal protector
b Faston connector
c Bracket

3 Disconnect the Faston connectors from the compressor thermal protector.

4 Separate the compressor thermal protector and the compressor thermal protector bracket.

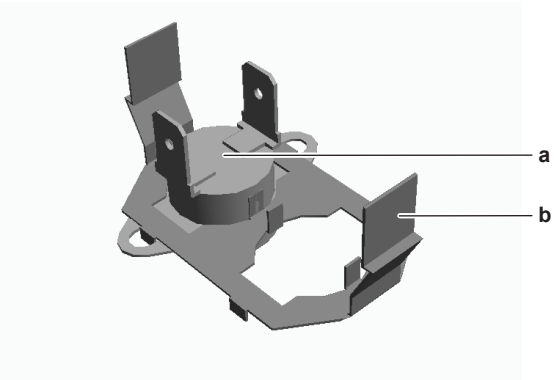

a Compressor thermal protector
b Compressor thermal protector bracket

5 To install the compressor thermal protector, see "3.2.2 Repair procedures" [▶ 59].

To install the compressor thermal protector

1 Install the compressor thermal protector on the compressor thermal protector bracket.

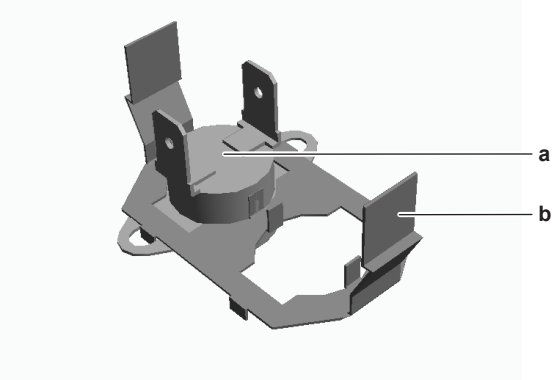

a Compressor thermal protector
b Compressor thermal protector bracket

2 Connect the Faston connectors to the compressor thermal protector.

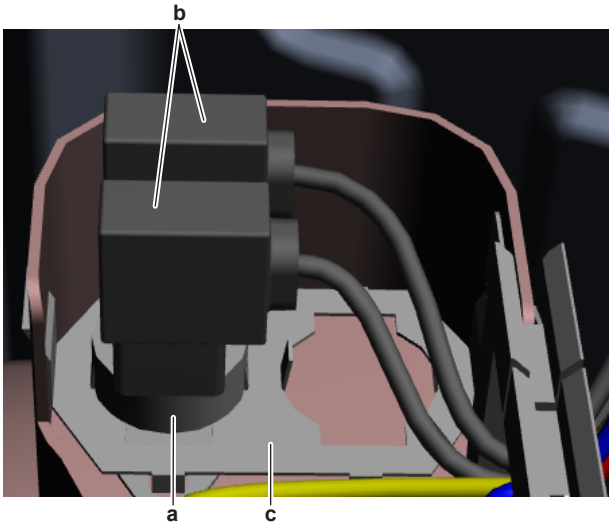

a Compressor thermal protector
b Faston connector
c Bracket

3 Install the compressor thermal protector in the compressor housing.

4 Install the wire terminals cover on the compressor.

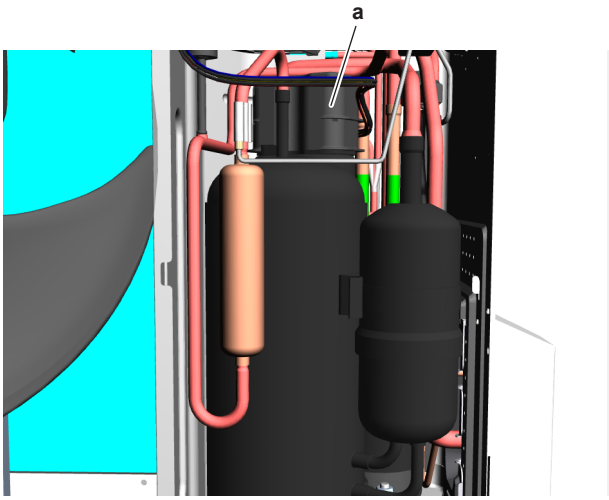

a Compressor wire terminals cover

5 Install the compressor insulation.

Is the problem solved?	Action
Yes	No further actions required.
No	Return to the troubleshooting of the specific error and continue with the next procedure.

3.4 Expansion valve

3.4.1 Checking procedures

INFORMATION

It is recommended to perform the checks in the listed order.

To perform a mechanical check of the expansion valve

Prerequisite: Power OFF the unit for 3 minutes. Then turn ON the unit and listen to the expansion valve assembly. If the expansion valve does NOT make a latching sound, continue with the electrical check of the expansion valve, see "3.4.1 Checking procedures" [▸ 68].

Prerequisite: Stop the unit operation via the user interface.

Prerequisite: Turn OFF the respective circuit breaker.

Prerequisite: Remove the required plate work, see "3.10 Plate work" [▸ 124].

1. Remove the expansion valve insulation (if applicable) and visually check:
   - For oil drops around the expansion valve. Locate and fix as necessary.
   - Pipes for signs of damage. Replace pipes as needed.
   - Coil wires for signs of damage. Replace expansion valve coil as needed. See "3.4.2 Repair procedures" [▸ 72].
2. Remove the expansion valve coil from the expansion valve body, see "3.4.2 Repair procedures" [▸ 72].
3. Slide the expansion valve magnet over the expansion valve body and gently rotate the magnet clockwise/counterclockwise to manually close/open the expansion valve. Listen to check if the valve is closing/opening and manually close the valve when check is done.

> **INFORMATION**
> After the check, remove the magnet from the expansion valve body and install the expansion valve coil on the expansion valve body. Make sure that the expansion valve coil is correctly installed on the expansion valve body.

> **INFORMATION**
> It is highly recommended to perform a power reset after checking the valve using a magnet.

Does the expansion valve open?	Action
Yes	Perform an electrical check of the expansion valve, see "3.4.1 Checking procedures" [▸ 68].
No	Replace the expansion valve body, see "3.4.2 Repair procedures" [▸ 72].

To perform an electrical check of the expansion valve

1. First perform a mechanical check of the expansion valve, see "3.4.1 Checking procedures" [▸ 68].
2. Disconnect the electrical connector of the expansion valve coil from the appropriate PCB and measure the resistance of all windings (between the pins of each phase (wire) and the common wire) using a multi meter. All measurements MUST be approximately the same.

Name	Symbol	Location (PCB)	Connector	Winding resistance
Main expansion valve	Y1E	Main	S20	46±4 Ω

INFORMATION

Below are shown examples of the resistance measurements in which the common wire is connected to pin 5 or to pin 6 of the expansion valve coil connector. Connections may differ according to the type of expansion valve.

- Connector pin 1-5,
- Connector pin 2-5,
- Connector pin 3-5,
- Connector pin 4-5.

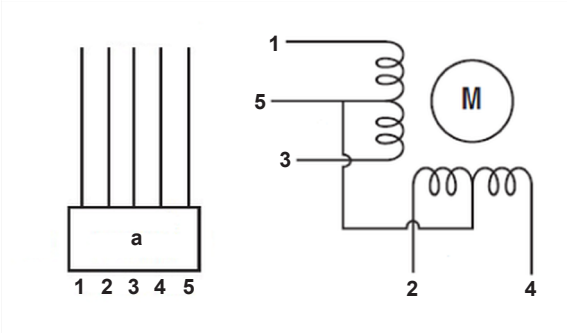

a Connector

- Connector pin 1-6,
- Connector pin 2-6,
- Connector pin 3-6,
- Connector pin 4-6.

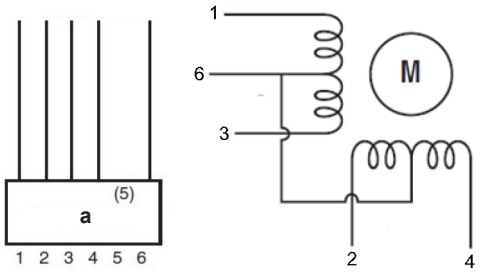

a Connector

3 Check the insulation resistance of the coil by measuring the resistance between the pins of each phase (1, 2, 3, 4) and GND on the unit.

Result: None of the measurements should be short-circuit.

WARNING

When reconnecting a connector to the PCB, make sure to connect it on the correct location and do NOT apply force, as this may damage the connector or connector pins of the PCB.

Is the measured resistance correct?	Action
Yes	Perform an operation check of the expansion valve, see "3.4.1 Checking procedures" [▸ 68].
No	Replace the expansion valve coil, "3.4.2 Repair procedures" [▸ 72].

To perform an operation check of the expansion valve

Prerequisite: First perform an electrical check of the expansion valve, see "3.4.1 Checking procedures" [▸ 68].

1 Turn ON the power of the unit.

> **INFORMATION**
> When power is switched ON, PCB checks all expansion valve coil windings by current check. If winding is short or open, expansion valve error is triggered.

2 Start the unit operation via the user interface.

3 With the unit operating, connect the service monitoring tool to the unit.

4 When the expansion valve is closed according to the service monitoring tool, check the inlet and outlet of the valve with a contact thermometer or use an expansion valve stethoscope to see if refrigerant flows through the expansion valve. Check that the valve is NOT bleeding.

   Result: There MUST be NO flow through the expansion valve.

5 When the expansion valve is open according to the service monitoring tool, check the inlet and outlet of the valve with a contact thermometer or use an expansion valve stethoscope to see if refrigerant flows through the expansion valve.

   Result: Refrigerant MUST flow through the expansion valve.

6 Wait for the PCB to command the expansion valve to open (when closed) or to close (when open) (pulse output to expansion valve visible on service monitoring tool).

> **INFORMATION**
> If the PCB does NOT command the expansion valve to open or close (when it is supposed to), perform a check of the appropriate thermistors and pressure sensors (as their measurements control the operation of the expansion valve(s)).

7 While in opening or closing sequence each expansion valve winding (Φ1, 2, 3, 4) is supplied with 12 V DC from the PCB. You will need a good multimeter, where its range is set to about 20 V DC, and during opening or closing sequence you may be able to measure the supply voltage for a short time. If you set the multimeter range to Auto, then most likely you may NOT read a value between switching ranges. The best way to check is to feel the movement of the valve by touching, rather than trying to measure the driving voltage.

8 When the expansion valve was commanded to close, check the inlet and outlet of the valve with a contact thermometer or use an expansion valve stethoscope to see if refrigerant flows through the expansion valve. Check that the valve is NOT bleeding.

   Result: There MUST be NO flow through the expansion valve.

9 When the expansion valve was commanded to open, check the inlet and outlet of the valve with a contact thermometer or use an expansion valve stethoscope to see if refrigerant flows through the expansion valve.

   Result: Refrigerant MUST flow through the expansion valve.

Is the flow through the expansion valve correct?	Action
Yes	Component is OK. Return to the troubleshooting of the specific error and continue with the next step.
No	Replace the expansion valve, see "3.4.2 Repair procedures" [▶ 72].

Problem solved?

After all checking procedures listed above have been performed:

Is the problem solved?	Action
Yes	No further actions required.
No	Return to the troubleshooting of the specific error and continue with the next procedure.

3.4.2 Repair procedures

To remove the expansion valve coil

Prerequisite: Stop the unit operation via the user interface.

Prerequisite: Turn OFF the respective circuit breaker.

Prerequisite: Remove the required plate work, see "3.10 Plate work" [▶ 124].

1 If needed, remove any parts or insulation to create more space for the removal.

2 Remove the cap (if appliccable) from the expansion valve coil.

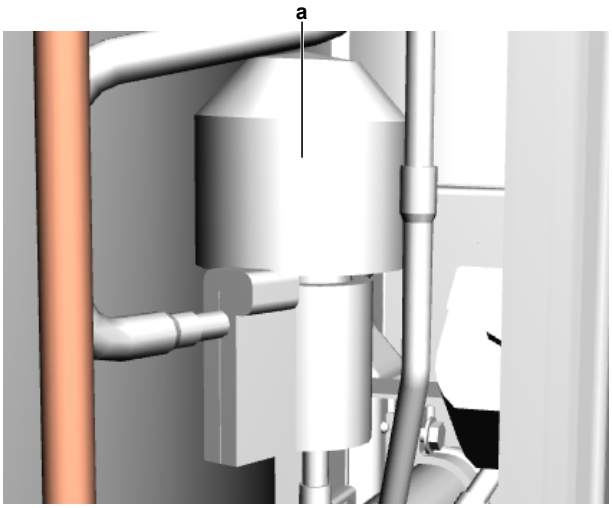

a Expansion valve coil cap

3 Pull up the expansion valve coil to remove it from the expansion valve body.

INFORMATION

It may be needed to turn the expansion valve coil 1/8 turn counter clockwise to unlock it. Make sure to note the correct orientation (position) of the expansion valve coil before removal.

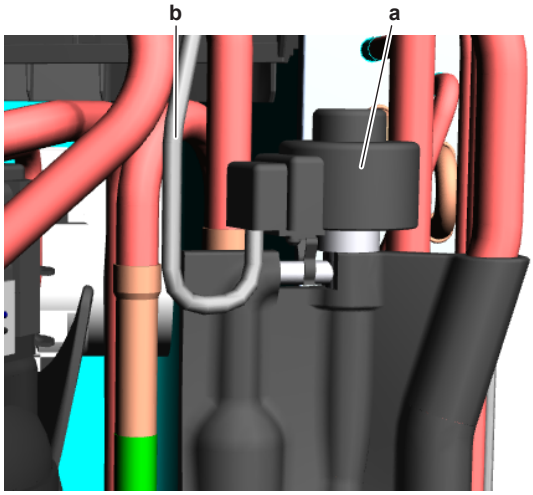

a Expansion valve coil
b Expansion valve coil harness

> **INFORMATION**
> The expansion valve and coil can have a different configuration / layout.

4 Cut all tie straps that fix the expansion valve coil harness.

5 Disconnect the expansion valve coil connector from the main PCB.

6 To install the expansion valve coil, see "3.4.2 Repair procedures" [▸ 72].

To remove the expansion valve body

Prerequisite: Recuperate the refrigerant from the refrigerant circuit, see "4.2.2 Repair procedures" [▸ 159].

Prerequisite: If needed, remove any parts or insulation to create more space for the removal.

1 Remove the expansion valve coil, see "3.4.2 Repair procedures" [▸ 72].

2 Remove the putty. Keep for re-use.

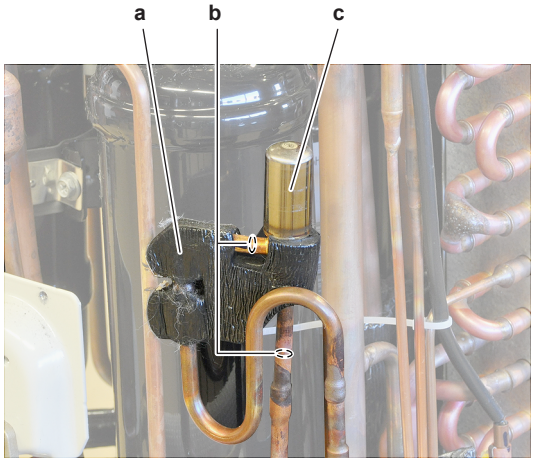

a Putty
b Expansion valve pipe
c Expansion valve body

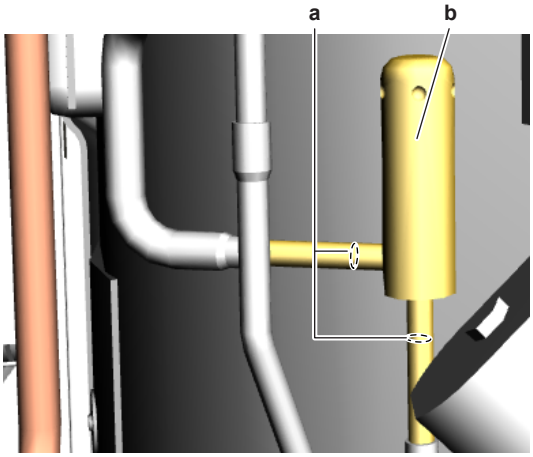

a Expansion valve pipe
b Expansion valve body

> **INFORMATION**
> The expansion valve and coil can have a different configuration / layout.

3. Using a valve magnet, open the expansion valve.
4. Supply nitrogen to the refrigerant circuit. The nitrogen pressure MUST NOT exceed 0.02 MPa.
5. Wrap a wet rag around the components near the expansion valve pipes. Heat the brazing points of the expansion valve pipes using an oxygen acetylene torch and remove the expansion valve pipes from the refrigerant pipes using pliers.
6. Stop the nitrogen supply when the piping has cooled down.
7. Remove the expansion valve body.

> **INFORMATION**
> It is ALSO possible to cut the component pipe(s) using a pipe cutter. Make sure to remove the remaining component pipe end(s) from the refrigerant pipes by heating the brazing point(s) of the component pipe(s) using an oxygen acetylene torch.

8. Install plugs or caps on the open pipe ends of the refrigerant piping to avoid dirt or impurities from entering the piping.
9. To install the expansion valve body, see "3.4.2 Repair procedures" [▸ 72].

To install the expansion valve body

1. Remove the plugs or caps from the refrigerant piping and make sure they are clean.
2. Remove the expansion valve coil from the spare part expansion valve body.
3. Install the expansion valve body in the correct location and correctly oriented. Insert the pipe ends in the pipe expansions.
4. Open the expansion valve using a valve magnet.
5. Supply nitrogen to the refrigerant circuit. The nitrogen pressure MUST NOT exceed 0.02 MPa.
6. Wrap a wet rag around the expansion valve body and any other components near the expansion valve and solder the expansion valve pipes to the refrigerant pipes.

CAUTION

Overheating the valve will damage or destroy it.

7 After soldering is done, stop the nitrogen supply after the component has cooled-down.

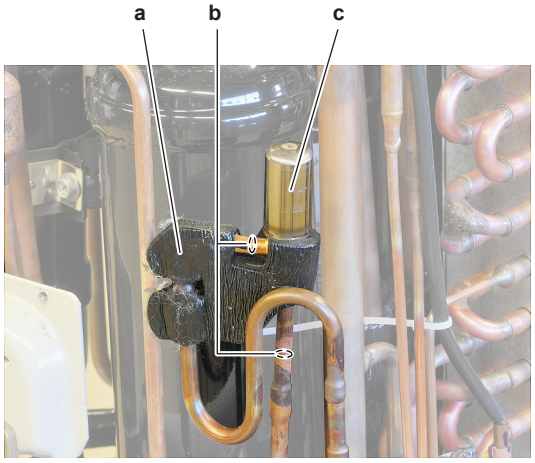

a Putty
b Expansion valve pipe
c Expansion valve body

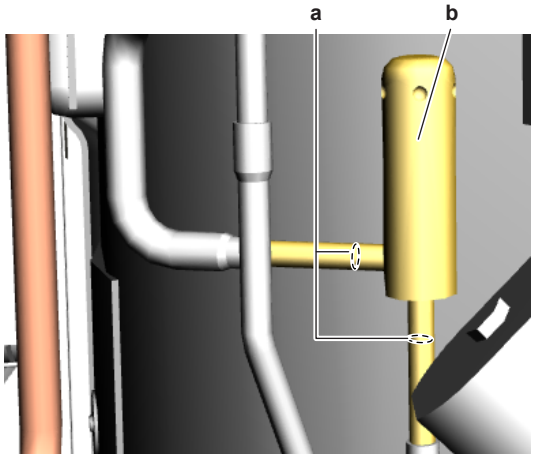

a Expansion valve pipe
b Expansion valve body

INFORMATION

The expansion valve and coil can have a different configuration / layout.

8 Reinstall the putty.

9 To install the expansion valve coil, see "3.4.2 Repair procedures" [▶ 72].

10 Perform a pressure test, see "4.2.1 Checking procedures" [▶ 155].

11 Add refrigerant to the refrigerant circuit, see "4.2.2 Repair procedures" [▶ 159].

About the installation of the expansion valve motor

NOTICE

Select the correct type.

To install the expansion valve coil with clip

1 Install the expansion valve coil on the expansion valve body.

> **INFORMATION**
> The expansion valve coil is equipped with a pipe retention clip. Install the pipe retention clip over the pipe to lock the expansion valve coil.

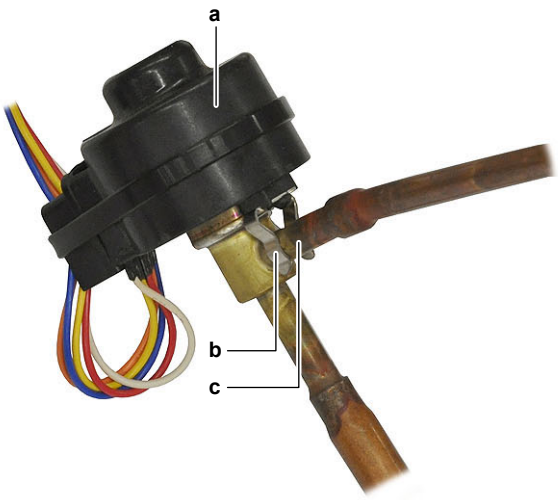

a Expansion valve coil
b Pipe retention clip
c Pipe

2 Route the expansion valve coil harness towards the appropriate PCB.

3 Connect the expansion valve coil connector to the appropriate PCB.

> **WARNING**
> When reconnecting a connector to the PCB, make sure to connect it on the correct location and do NOT apply force, as this may damage the connector or connector pins of the PCB.

4 Fix the expansion valve coil harness using new tie straps.

5 Install the insulation cap on the expansion valve coil (if applicable).

Is the problem solved?	Action
Yes	No further actions required.
No	Return to "3.4.1 Checking procedures" [▸ 68] of the expansion valve and continue with the next procedure.

To install the expansion valve coil with bracket

1 Install the expansion valve coil on the expansion valve body.

> **INFORMATION**
> The expansion valve coil is equipped with a metal bracket. Fit the nipples of the metal bracket into the notches of the expansion valve body.

> **CAUTION**
> Make sure to install the expansion valve coil in the correct position (orientation).

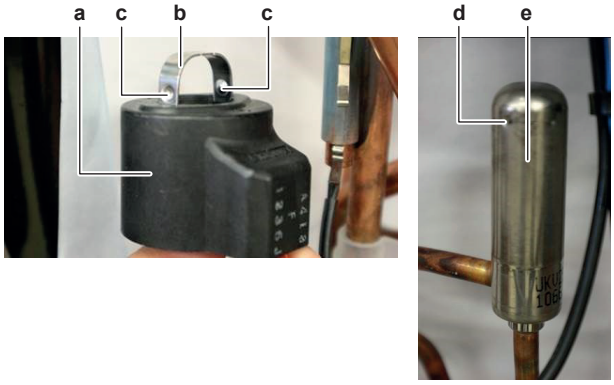

- **a** Expansion valve coil
- **b** Metal bracket
- **c** Nipple
- **d** Notch
- **e** Expansion valve body

2. Route the expansion valve coil harness towards the appropriate PCB.
3. Connect the expansion valve coil connector to the appropriate PCB.

> **WARNING**
>
> When reconnecting a connector to the PCB, make sure to connect it on the correct location and do NOT apply force, as this may damage the connector or connector pins of the PCB.

4. Fix the expansion valve coil harness using new tie straps.
5. Install the insulation cap on the expansion valve coil (if applicable).

Is the problem solved?	Action
Yes	No further actions required.
No	Return to "3.4.1 Checking procedures" [▸ 68] of the expansion valve and continue with the next procedure.

3.5 High pressure switch

3.5.1 Checking procedures

To perform an electrical check of the high pressure switch

Prerequisite: Stop the unit operation via the user interface.

Prerequisite: Turn OFF the respective circuit breaker.

Prerequisite: Remove the required plate work, see "3.10 Plate work" [▸ 124].

1. Recuperate the refrigerant from the refrigerant circuit, see "4.2.2 Repair procedures" [▸ 159].
2. Fill the refrigerant circuit with nitrogen until pressurized just below operating pressure of the high pressure switch.

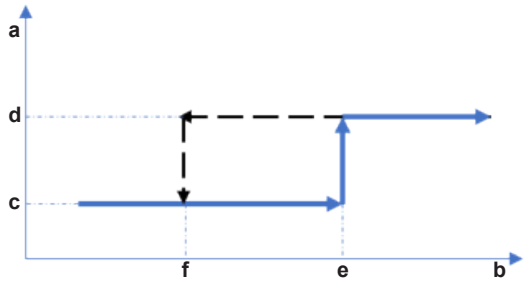

a High pressure switch protection control
b Pressure
c High pressure switch closed
d High pressure switch open
e High pressure switch operating pressure
f High pressure switch reset pressure

Unit	High pressure switch	Operating pressure (MPa)	Reset pressure (MPa)
RXF20~35A + RXF20+25B + RXF20~42C + RXF42D + ARXF20~35A + ARXF20~42C + ARXF42D	S1PH	4.17	3.2
RXF60A	S1PH	4.00	3.2
RXF71A + RXF50~60B + ARXF50~71A	S1PH	4.15	3.2

3 Disconnect the Faston connectors from the high pressure switch.

INFORMATION

Measure the continuity of all wiring between the high pressure switch and the appropriate PCB. If NO continuity is measured, repair as needed, see "6.2 Wiring diagram" [▸ 169].

For (A)RXF20~35A, RXF20+25B, (A)RXF20~42C and (A)RXF42D units ONLY: Make sure that the compressor thermal protector (which is wired in series with the high pressure switch) functions correctly, see "3.3.1 Checking procedures" [▸ 64].

4 Measure the resistance between the Faston connections of the high pressure switch.

Result: The switch MUST be closed.

5 Fill the refrigerant circuit with nitrogen until pressurized just above operating pressure of the high pressure switch.

6 Measure the resistance between the Faston connections of the high pressure switch.

Result: The switch MUST be open.

INFORMATION

If the high pressure switch was triggered open, it will stay open until the refrigerant pressure drops below the reset pressure of the high pressure switch.

7 Lower the pressure of the nitrogen in the refrigerant circuit just above reset pressure of the high pressure switch.

8 Measure the resistance between the Faston connections of the high pressure switch.

Result: The switch MUST be open.

9 Lower the pressure of the nitrogen in the refrigerant circuit just below reset pressure of the high pressure switch.

10 Measure the resistance between the Faston connections of the high pressure switch.

Result: The switch MUST be closed.

High pressure switch connector measurements are correct?	Then
Yes	High pressure switch is OK. Return to the troubleshooting of the specific error and continue with the next procedure.
No	Replace the high pressure switch, see "3.5.2 Repair procedures" [▶ 79].

3.5.2 Repair procedures

To remove the high pressure switch

Prerequisite: Stop the unit operation via the user interface.

Prerequisite: Turn OFF the respective circuit breaker.

Prerequisite: Remove the required plate work, see "3.10 Plate work" [▶ 124].

Prerequisite: Recuperate the refrigerant from the refrigerant circuit, see "4.2.2 Repair procedures" [▶ 159].

1 If needed, remove any parts to create more space for the removal of the high pressure switch.

2 Disconnect the Faston connectors from the high pressure switch.

3 Supply nitrogen to the refrigerant circuit. The nitrogen pressure MUST NOT exceed 0.02 MPa.

4 Wrap a wet rag around the components near the high pressure switch. Heat the brazing point of the high pressure switch pipe using an oxygen acetylene torch and remove the high pressure switch pipe from the refrigerant pipe using pliers.

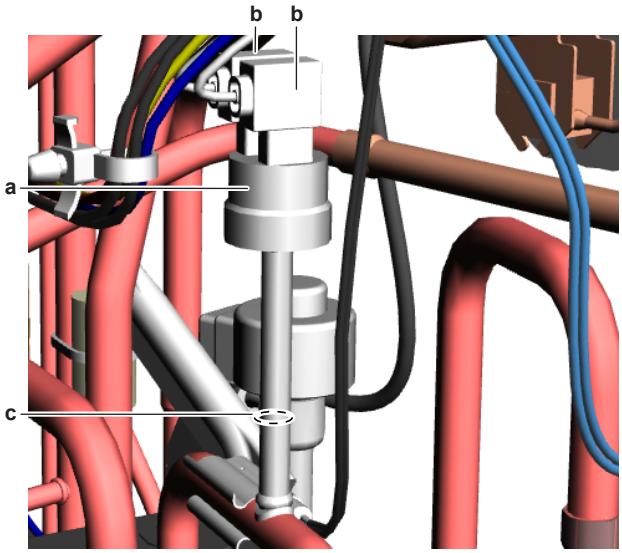

a High pressure switch
b Faston connector
c High pressure switch pipe

5 Stop the nitrogen supply when the piping has cooled down.

6 Remove the high pressure switch.

> **INFORMATION**
> It is ALSO possible to cut the component pipe(s) using a pipe cutter. Make sure to remove the remaining component pipe end(s) from the refrigerant pipes by heating the brazing point(s) of the component pipe(s) using an oxygen acetylene torch.

7 Install a plug or cap on the refrigerant piping to avoid dirt or impurities from entering the piping.

8 To install the high pressure switch, see "3.5.2 Repair procedures" [▶ 79].

To install the high pressure switch

1 Remove the plug or cap from the refrigerant piping and make sure it is clean.

2 Install the high pressure switch in the correct location.

3 Supply nitrogen to the refrigerant circuit. The nitrogen pressure MUST NOT exceed 0.02 MPa.

4 Wrap a wet rag around the high pressure switch and any other components near the high pressure switch and solder the high pressure switch pipe to the refrigerant pipe.

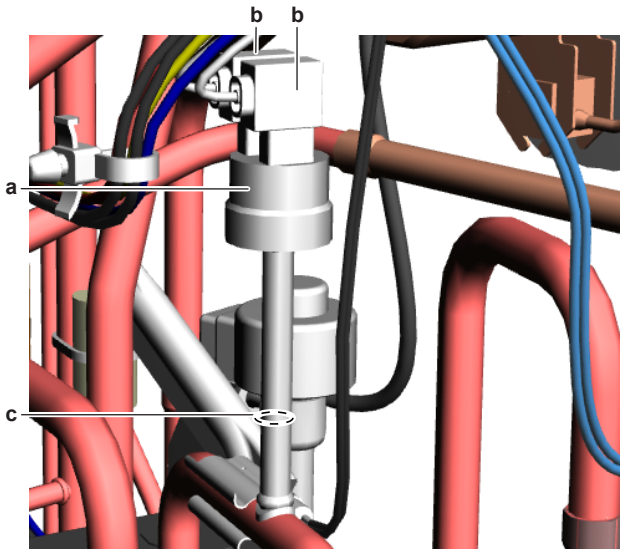

a High pressure switch
b Faston connector
c High pressure switch pipe

> **CAUTION**
> Overheating the pressure switch will damage or destroy it.

5 After soldering is done, stop the nitrogen supply after the component has cooled-down.

6 Connect the Faston connectors to the high pressure switch.

7 Perform a pressure test, see "4.2.1 Checking procedures" [▶ 155].

8 Add refrigerant to the refrigerant circuit, see "4.2.2 Repair procedures" [▶ 159].

Is the problem solved?	Action
Yes	No further actions required.
No	Return to the troubleshooting of the specific error and continue with the next procedure.

3.6 Indoor unit fan motor

3.6.1 Checking procedures

INFORMATION

It is recommended to perform the checks in the listed order.

To perform a mechanical check of the DC fan motor assembly

Prerequisite: Stop the unit operation via the user interface.

Prerequisite: Turn OFF the respective circuit breaker.

Prerequisite: Remove the required plate work, see "3.10 Plate work" [▶ 124].

1. Check the fan for damage, deformations and cracks. Replace the fan as needed.
2. Check that the fan is correctly installed on the DC fan motor. Correct as needed.
3. Manually rotate the fan and check the friction of the DC fan motor shaft bearing.

Is the DC fan motor shaft friction normal?	Action
Yes	Perform an electrical check of the DC fan motor assembly, see "3.6.1 Checking procedures" [▶ 81].
No	Replace the DC fan motor assembly, see "3.6.2 Repair procedures" [▶ 82].

To perform an electrical check of the DC fan motor assembly

(A)(F)TXF-A + FTXF-B + (A)(F)TXF-C + (A)(F)TXF-D units

Prerequisite: First perform a mechanical check of the DC fan motor assembly, see "3.6.1 Checking procedures" [▶ 81].

1. Remove the cover from the switch box; see "3.10 Plate work" [▶ 124].
2. Disconnect the DC fan motor connector from the appropriate PCB.
3. Measure the resistance between the pins 6-9, 6-12, and 9-12 of the DC fan motor connector.

   Result: All measurements MUST be 71.6~82.4 Ω.
4. Check the diode module by measuring the voltage between the following pins of the DC fan motor connector.

VDC	Comm	Voltage
1	3	0.992 V DC

VDC	Comm	Voltage
2	3	1.433 V DC
3	1	OL
3	2	OL

DC fan motor measurements are correct?	Action
Yes	Return to the troubleshooting of the specific error and continue with the next procedure.
No	Replace the DC fan motor, see "3.6.2 Repair procedures" [▸ 82].

(A)(F)TXF-E units

Prerequisite: First perform a mechanical check of the DC fan motor assembly, see "3.6.1 Checking procedures" [▸ 81].

1. Remove the cover from the switch box; see "3.10 Plate work" [▸ 124].
2. Disconnect the DC fan motor connector from the appropriate PCB.
3. Measure the resistance between the pins 1-2, 1-3, and 2-3 of the DC fan motor connector.

   Result: All measurements MUST be 70.9~78.3 Ω.

DC fan motor measurements are correct?	Action
Yes	Return to the troubleshooting of the specific error and continue with the next procedure.
No	Replace the DC fan motor, see "3.6.2 Repair procedures" [▸ 82].

3.6.2 Repair procedures

To remove the DC fan motor assembly

Prerequisite: Stop the unit operation via the user interface.

Prerequisite: Turn OFF the respective circuit breaker.

Prerequisite: Remove the required plate work, see "3.10 Plate work" [▸ 124].

1. Remove the switch box, see "3.10 Plate work" [▸ 124].
2. Click the indoor unit fan motor cover out of the indoor unit. If needed, remove the screw (if installed) on the right hand side of the fan motor cover for easier removal.

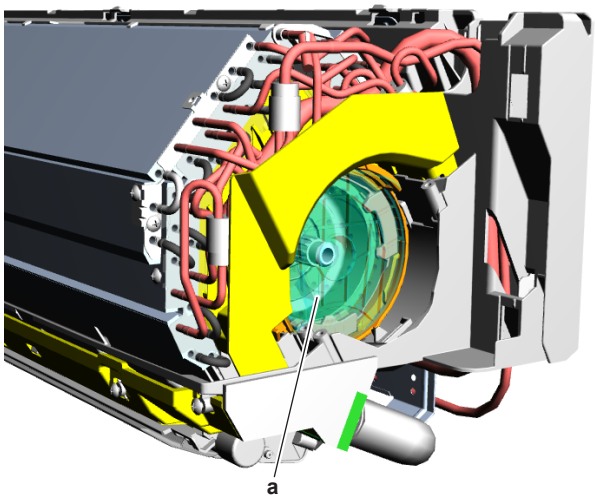

a Indoor unit fan motor cover

3 Remove the rubber from the indoor unit.

4 Remove the indoor unit fan motor from the indoor unit.

5 To install the indoor unit fan motor, see "3.6.2 Repair procedures" [▸ 82].

To install the DC fan motor assembly

1 Install the indoor unit fan motor in its correct location on the fan.

2 Install the rubber in front of the fan motor.

3 Click the indoor unit fan motor cover on the indoor unit. If removed, install and tighten the screw on the right hand side of the fan motor cover.

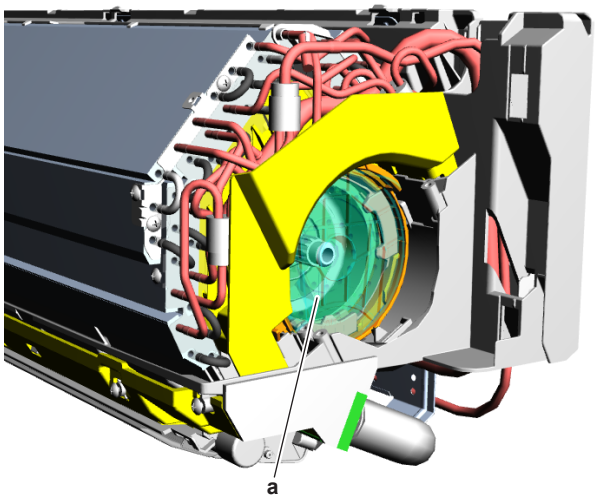

a Indoor unit fan motor cover

4 Install the switch box, see "3.10 Plate work" [▸ 124].

Is the problem solved?	Action
Yes	No further actions required.
No	Return to the troubleshooting of the specific error and continue with the next procedure.

3.7 Indoor unit main PCB

3.7.1 Checking procedures

> **INFORMATION**
> It is recommended to perform the checks in the listed order.

To perform a power check of the indoor unit main PCB

Prerequisite: Stop the unit operation via the user interface.

Prerequisite: Turn OFF the respective circuit breaker.

Prerequisite: Remove the required plate work, see "3.10 Plate work" [▶ 124].

1 Turn ON the power of the unit.

2 Measure the voltage between the black and white wires on the PCB. The measured voltage MUST be 230 V AC.

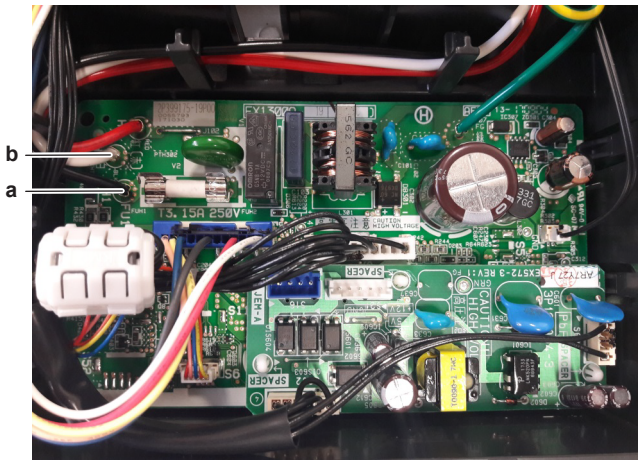

a Black wire
b White wire

Is the measured voltage on the indoor unit PCB correct?	Action
Yes	Return to "3.7.1 Checking procedures" [▶ 84] of the indoor unit PCB and continue with the next procedure.
No	Continue with the next step.

3 Check the power supply to the indoor unit, see "4.1.1 Checking procedures" [▶ 153].

Is the power supply to the indoor unit correct?	Action
Yes	Correct the wiring between the power supply terminal of the indoor unit and the indoor unit PCB, see "3.7.2 Repair procedures" [▶ 86].
No	See "To check the power supply to the indoor unit" ("4.1.2 Repair procedures" [▶ 154]) for the next steps.

To perform an electrical check of the indoor unit main PCB

Procedure not available yet.

To check if the correct spare part is installed

Prerequisite: First perform all earlier checks of the indoor unit main PCB, see "3.7.1 Checking procedures" [▸ 84].

1 Visit your local spare parts webbank.

2 Enter the model name of your unit and check if the installed spare part number corresponds with the spare part number indicated in the webbank.

Is the correct spare part for the indoor unit main PCB installed?	Action
Yes	Return to "3.7.1 Checking procedures" [▸ 84] of the indoor unit main PCB and continue with the next procedure.
No	Replace the indoor unit main PCB, see "3.7.2 Repair procedures" [▸ 86].

To check the wiring of the indoor unit main PCB

Prerequisite: First perform all earlier checks of the indoor unit main PCB, see "3.7.1 Checking procedures" [▸ 84].

Prerequisite: Stop the unit operation via the user interface.

Prerequisite: Turn OFF the respective circuit breaker.

1 Check that all wires are properly connected and that all connectors are fully plugged-in.

2 Check that no connectors or wires are damaged.

3 Check that the wiring corresponds with the wiring diagram, see "6.2 Wiring diagram" [▸ 169].

> **INFORMATION**
> Correct the wiring as needed.

Is the problem solved?	Action
Yes	No further actions required.
No	Return to "3.7.1 Checking procedures" [▸ 84] of the indoor unit main PCB and continue with the next procedure.

To check the fuse of the indoor unit main PCB

Prerequisite: First perform all earlier checks of the indoor unit main PCB, see "3.7.1 Checking procedures" [▸ 84].

1 Measure the continuity of the fuse. If no continuity is measured, the fuse has blown.

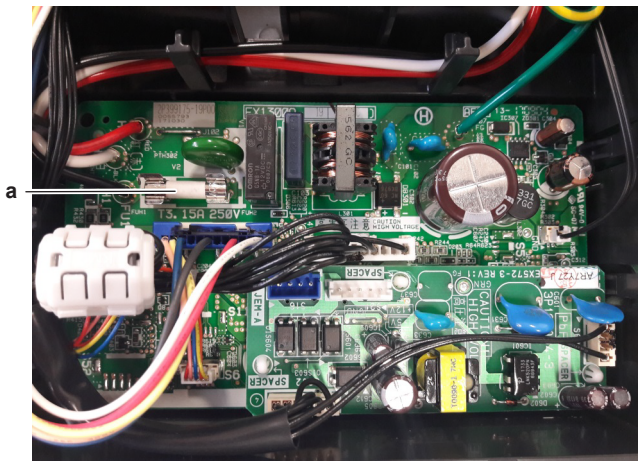

a Fuse

Blown fuse on the indoor unit main PCB?	Action
Yes	Replace the blown fuse, see "3.7.2 Repair procedures" [▶ 86].
No	Return to "3.7.1 Checking procedures" [▶ 84] of the indoor unit main PCB and continue with the next procedure.

Problem solved?

After all checking procedures listed above have been performed:

Is the problem solved?	Action
Yes	No further actions required.
No	Return to the troubleshooting of the specific error and continue with the next procedure.

3.7.2 Repair procedures

To correct the wiring from the indoor unit power supply terminal to the indoor unit main PCB

Prerequisite: Stop the unit operation via the user interface.

Prerequisite: Turn OFF the respective circuit breaker.

Prerequisite: Remove the required plate work, see "3.10 Plate work" [▶ 124].

1 Correct the wiring from the indoor unit power supply terminal to the PCB, see "6.2 Wiring diagram" [▶ 169].

Is the problem solved?	Action
Yes	No further actions required.
No	Return to "3.7.1 Checking procedures" [▶ 84] of the indoor unit main PCB and continue with the next procedure.

To remove the indoor unit main PCB

Prerequisite: Stop the unit operation via the user interface.

Prerequisite: Turn OFF the respective circuit breaker.

Prerequisite: Remove the required plate work, see "3.10 Plate work" [▶ 124].

1 Disconnect all connectors from the indoor unit main PCB.

2 Carefully pull the indoor unit main PCB from the PCB supports.

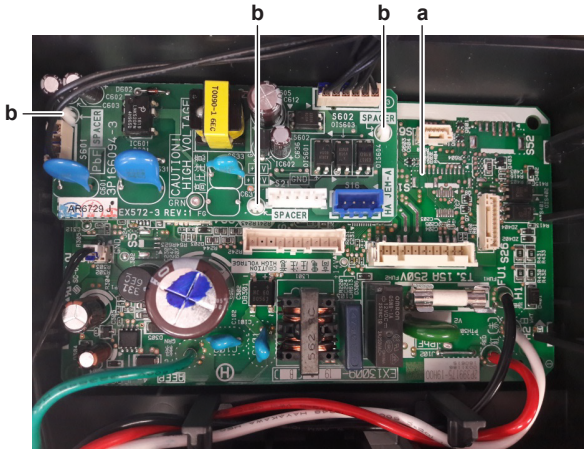

a Indoor unit main PCB
b PCB support

3 Remove the indoor unit main PCB from the indoor unit.

4 To install the indoor unit main PCB, see "3.7.2 Repair procedures" [▶ 86].

To install the indoor unit main PCB

1 Install the indoor unit main PCB in the correct location on the PCB supports.

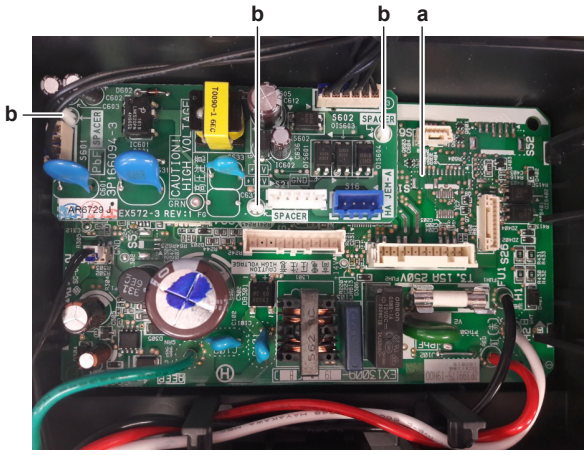

a Indoor unit main PCB
b PCB support

2 Connect all connectors to the indoor unit main PCB.

INFORMATION

Use the wiring diagram and connection diagram for correct installation of the connectors, see "6.2 Wiring diagram" [▶ 169].

WARNING

When reconnecting a connector to the PCB, make sure to connect it on the correct location and do NOT apply force, as this may damage the connector or connector pins of the PCB.

Is the problem solved?	Action
Yes	No further actions required.
No	Return to "3.7.1 Checking procedures" [▶ 84] of the indoor unit main PCB and continue with the next procedure.

To remove a fuse of the indoor unit main PCB

Prerequisite: Stop the unit operation via the user interface.

Prerequisite: Turn OFF the respective circuit breaker.

Prerequisite: Remove the required plate work, see "3.10 Plate work" [▶ 124].

1 Remove the fuse from the PCB.

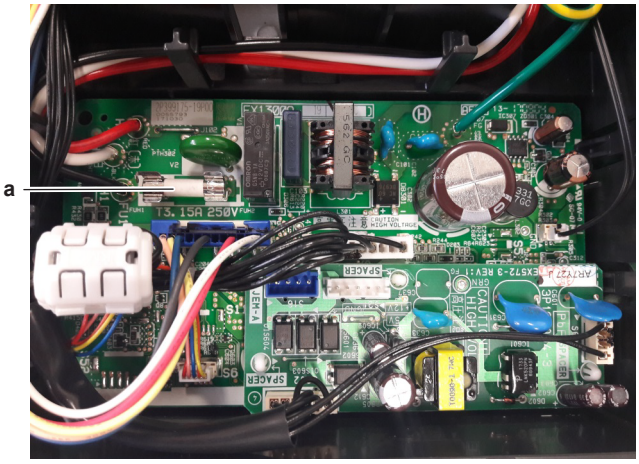

a Fuse

2 To install a fuse on the indoor unit PCB, see "3.7.2 Repair procedures" [▶ 86].

To install a fuse on the indoor unit main PCB

1 Install the fuse on the correct location on the PCB.

CAUTION

Make sure the fuse is plugged-in correctly (contact with the fuse holder).

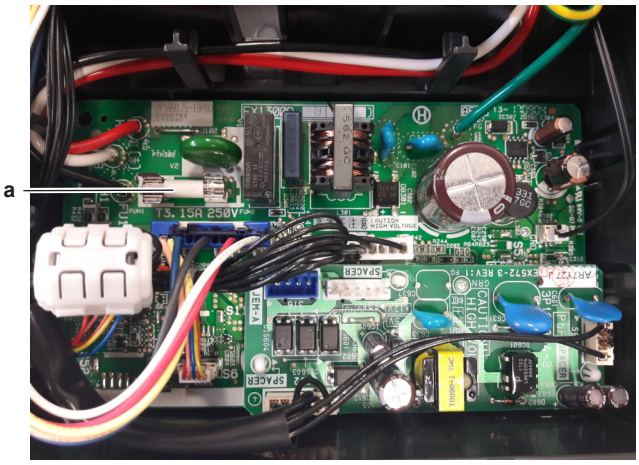

a Fuse

Is the problem solved?	Action
Yes	No further actions required.

Is the problem solved?	Action
No	Return to "3.7.1 Checking procedures" [▸ 84] of the indoor unit main PCB and continue with the next procedure.

3.8 Main PCB

3.8.1 Class 20~42 units

Checking procedures

> **INFORMATION**
> It is recommended to perform the checks in the listed order.

To perform a power check of the main PCB

(A)RXF20~35A + RXF20+25B + (A)RXF20~42C + (A)RXF42D units

Prerequisite: Stop the unit operation via the user interface.

Prerequisite: Turn OFF the respective circuit breaker.

Prerequisite: Remove the required plate work, see "3.10 Plate work" [▸ 124].

1. Turn ON the power of the unit.
2. Measure the voltage between the black and white wires.

   Result: The measured voltage MUST be 230 V AC.

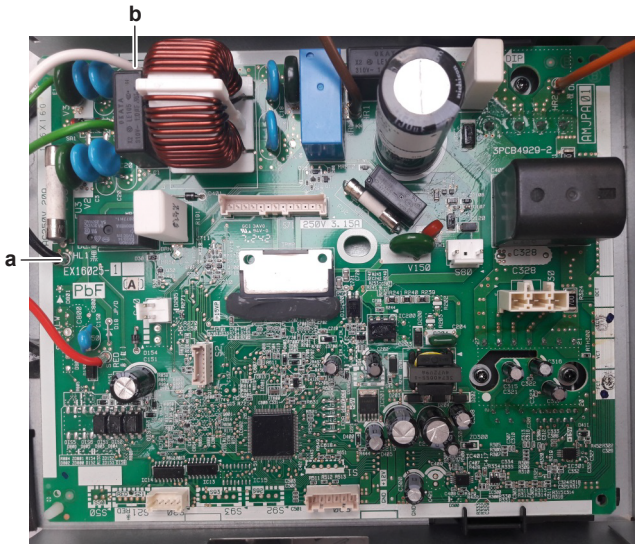

a Black wire
b White wire

Is the measured voltage on the PCB correct?	Action
Yes	Return to "Checking procedures" [▸ 89] of the PCB and continue with the next procedure.
No	Continue with the next step.

3. Check the power supply to the unit, see "4.1.1 Checking procedures" [▸ 153].

Does the unit receive power?	Action
Yes	Replace the main PCB, see "Repair procedures" [▸ 101].
No	Adjust the power supply to the unit, see "4.1.2 Repair procedures" [▸ 154].

(A)RXF20~35D + (A)RXF20~42E units

Prerequisite: Stop the unit operation via the user interface.

Prerequisite: Turn OFF the respective circuit breaker.

Prerequisite: Remove the required plate work, see "3.10 Plate work" [▸ 124].

1 Turn ON the power of the unit.

2 Measure the voltage between pins 1-2 of the connector S10 on the main PCB.

Result: The measured voltage MUST be 230 V AC.

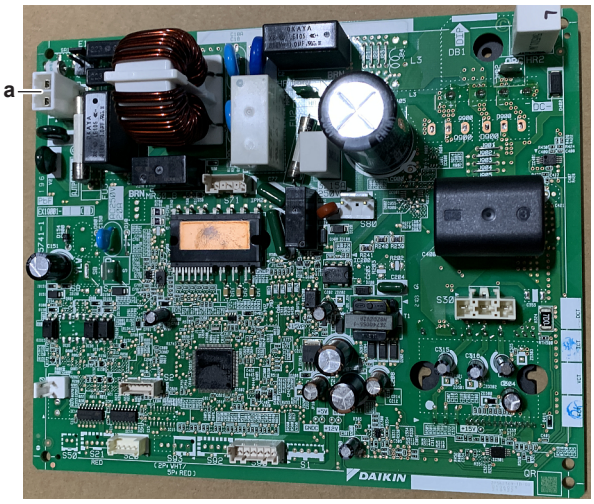

a Connector S10

Is the measured voltage on the PCB correct?	Action
Yes	Return to "Checking procedures" [▸ 89] of the PCB and continue with the next procedure.
No	Continue with the next step.

3 Check the power supply to the unit, see "4.1.1 Checking procedures" [▸ 153].

Does the unit receive power?	Action
Yes	Correct the wiring from the main power supply terminal to the main PCB, see "Repair procedures" [▸ 101].
No	Adjust the power supply to the unit, see "4.1.2 Repair procedures" [▸ 154].

To check the HAP LED of the main PCB

Prerequisite: First check the power supply to the main PCB, see "Checking procedures" [▸ 89].

1 Locate the HAP LED on the main PCB.

A

a

A (A)RXF20~35A + RXF20+25B + (A)RXF20~42C + (A)RXF42D units
a HAP LED

A

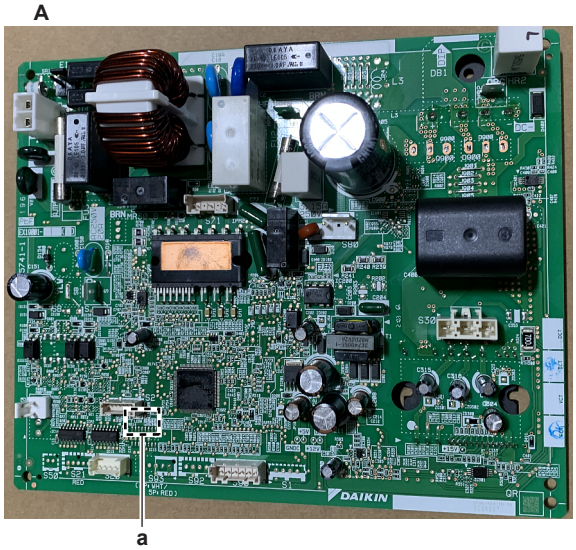

a

A (A)RXF20~35D + (A)RXF20~42E units
a HAP LED

INFORMATION

Make sure the correct software is available on the PCB. If NOT, update using the updater tool.

Does the HAP LED blink in regular intervals (1 second ON/1 second OFF)?	Action
Yes	Return to "Checking procedures" [▶ 89] of the main PCB and continue with the next procedure.
No	Replace the main PCB, see "Repair procedures" [▶ 101].

To check if the correct spare part is installed

Prerequisite: First perform all earlier main PCB checks, see "Checking procedures" [▶ 89].

1 Visit your local spare parts webbank.

2 Enter the model name of your unit and check if the installed spare part number corresponds with the spare part number indicated in the webbank.

NOTICE

Also check that the correct spare part is installed for the capacity adapter.

Is the correct spare part for the PCB installed?	Action
Yes	Return to "Checking procedures" [▸ 89] of the main PCB and continue with the next procedure.
No	Replace the main PCB, see "Repair procedures" [▸ 101].

To check the wiring of the main PCB

Prerequisite: First perform all earlier main PCB checks, see "Checking procedures" [▸ 89].

Prerequisite: Stop the unit operation via the user interface.

1 Turn OFF the respective circuit breaker.

2 Check that all wires are properly connected and that all connectors are fully plugged-in.

3 Check that no connectors or wires are damaged.

4 Check that the wiring corresponds with the wiring diagram, see "6.2 Wiring diagram" [▸ 169].

INFORMATION

Correct the wiring as needed.

Is the problem solved?	Action
Yes	No further actions required.
No	Return to "Checking procedures" [▸ 89] of the PCB and continue with the next procedure.

To perform a check of the inverter functions of the main PCB

INFORMATION

The inverter PCB is integrated in the main PCB. To check the inverter functions of the main PCB, perform as described below.

Prerequisite: First perform all earlier main PCB checks, see "Checking procedures" [▸ 89].

1 Open the compressor insulation.

DANGER: RISK OF ELECTROCUTION

Wait for at least 10 minutes after the circuit breaker has been turned OFF, to be sure the rectifier voltage is below 10 V DC before proceeding.

2 Remove the cover of the compressor wire terminals.

3 Disconnect the wiring from the compressor wire terminals U, V and W.

INFORMATION

Note the position of the Faston connectors on the compressor wire terminals to allow correct connection during installation.

Connect the Faston connectors to the Inverter Analyzer (SPP number 2238609).

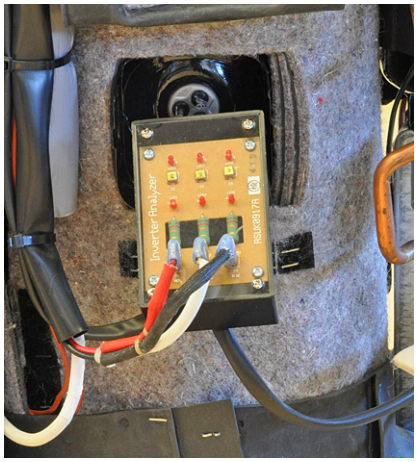

4 Turn ON the power of the unit.

5 Use the remote controller to activate the inverter test:

- Press the centre of TEMP and MODE simultaneously.
- Press MODE to select T (test run mode).
- Press MODE to select FAN mode.
- Press ON/OFF to start power transistor check operation.

CAUTION

Make sure that the Faston connectors are disconnected from the compressor wire terminals and connected to the Inverter Analyzer before starting the power transistor check operation. If NOT, power transistor check operation may damage the compressor.

INFORMATION

Wait for 3 minutes for the power transistor check operation to start.

6 All LED's on the Inverter Analyzer must lit.

7 Turn off the respective circuit breaker.

8 Wait a few minutes and confirm that the LED's of the Inverter Analyzer are off.

9 Disconnect the Inverter Analyzer from the Faston connectors.

10 Connect the Faston connectors to the wire terminals U, V and W of the compressor.

INFORMATION

Use the notes made during disconnection to connect the compressor wiring to the correct wire terminals of the compressor.

11 Install the compressor wiring terminals cover.

All LED's of the inverter analyzer are lit during inverter test?	Action
Yes	Return to "Checking procedures" [▸ 89] of the main PCB and continue with the next procedure.
No	Replace the main PCB, see "Repair procedures" [▸ 101].

To check the fuse of the main PCB

(A)RXF20~35A + RXF20+25B + (A)RXF20~42C + (A)RXF42D units

Prerequisite: First perform all earlier main PCB checks, see "Checking procedures" [▸ 89].

1 Measure the continuity of the fuse. If no continuity is measured, the fuse has blown.

a Fuse

Blown fuse on the main PCB?	Action
Yes	Replace the blown fuse, see "Repair procedures" [▸ 101].
No	Return to "Checking procedures" [▸ 89] of the main PCB and continue with the next procedure.

(A)RXF20~35D + (A)RXF20~42E units

Prerequisite: First perform all earlier main PCB checks, see "Checking procedures" [▸ 89].

1 Measure the continuity of the fuse. If no continuity is measured, the fuse has blown.

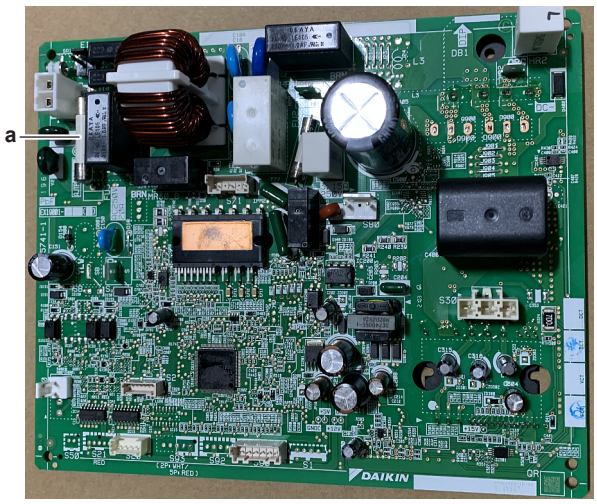

a Fuse FU3

Blown fuse on the main PCB?	Action
Yes	Replace the main PCB, see "Repair procedures" [▸ 101].
No	Return to "Checking procedures" [▸ 89] of the main PCB and continue with the next procedure.

To check the rectifier voltage of the main PCB

Prerequisite: First perform all earlier main PCB checks, see "Checking procedures" [▸ 89].

1. Turn ON the power of the unit.
2. Measure the voltage on the rectifier voltage check terminals (+ and –) on the main PCB.

   Result: The measured voltage MUST be approximately 324 V DC.

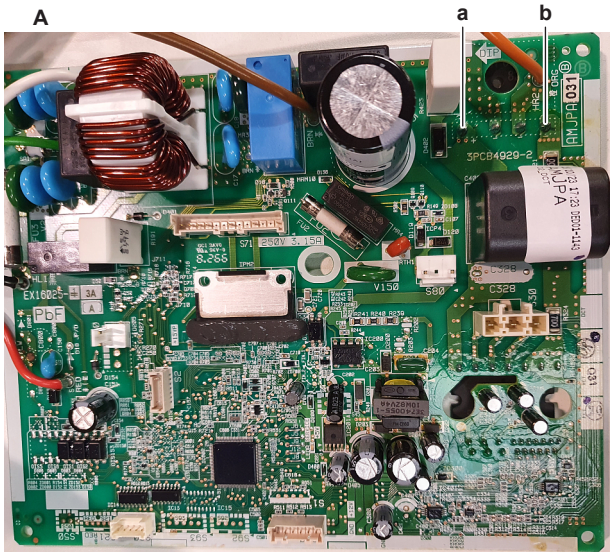

A (A)RXF20~35A + RXF20+25B + (A)RXF20~42C + (A)RXF42D units
a + terminal
b – terminal

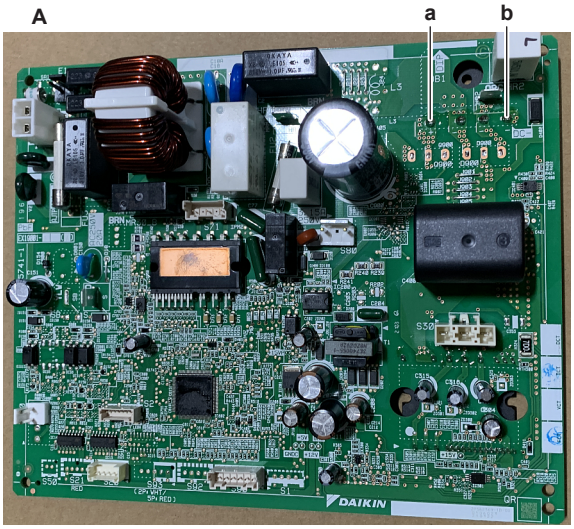

A (A)RXF20~35D + (A)RXF20~42E units
a + terminal
b – terminal

> **INFORMATION**
> When measuring on the front of the main PCB, make sure to locally remove the protective varnish with the test leads of the multi meter.

Is the measured rectifier voltage correct?	Action
Yes	Perform a check of the power modules, see "Checking procedures" [▸ 89].
No	Replace the main PCB, see "Repair procedures" [▸ 101].

To perform a diode module check

1 First check the rectifier voltage of the main PCB, see "Checking procedures" [▸ 89].

> **INFORMATION**
> If the rectifier voltage is OK, the diode module is OK. If rectifier voltage is NOT OK, replace the main PCB.
>
> Below procedure describes how to check the diode module itself.

Prerequisite: Stop the unit operation via the user interface.

2 Turn OFF the respective circuit breaker.

> **DANGER: RISK OF ELECTROCUTION**
> Wait for at least 10 minutes after the circuit breaker has been turned OFF, to be sure the rectifier voltage is below 10 V DC before proceeding.

3 Check the diode module in reference with the image and the table below.

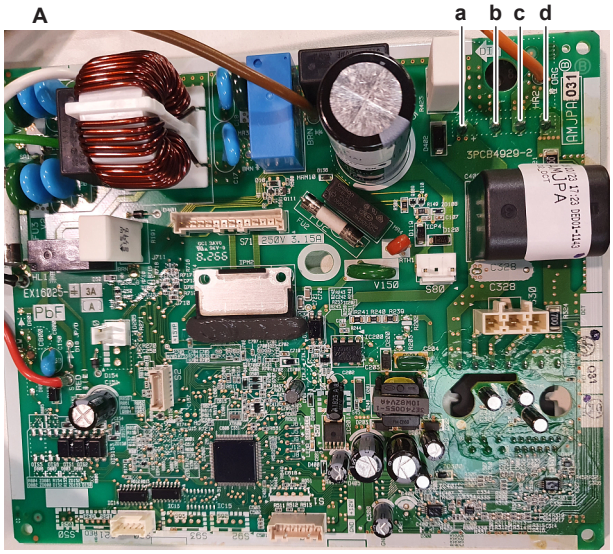

A (A)RXF20~35A + RXF20+25B + (A)RXF20~42C + (A)RXF42D units
a V DC out (+)
b V AC in
c V AC in
d V DC out (–)

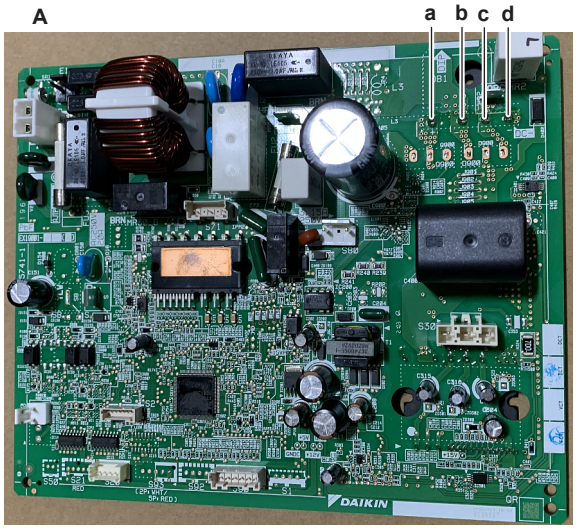

A (A)RXF20~35D + (A)RXF20~42E units
a V DC out (+)
b V AC in
c V AC in
d V DC out (–)

INFORMATION

When measuring on the front of the main PCB, make sure to locally remove the protective varnish with the test leads of the multi meter.

VDC	Com	Ref	VDC	Com	Ref
d	b	0.51~0.52 V	b	d	O.L
b	a	0.51~0.52 V	a	b	O.L
d	c	0.51~0.52 V	c	d	O.L
c	a	0.51~0.52 V	a	c	O.L

4 If the diode module is NOT OK, replace the main PCB, see "Repair procedures" [▶ 101].

To perform a power module check

Prerequisite: First check the rectifier voltage of the main PCB, see "Checking procedures" [▶ 89].

Prerequisite: Stop the unit operation via the user interface.

1 Turn OFF the respective circuit breaker.

> **DANGER: RISK OF ELECTROCUTION**
>
> Wait for at least 10 minutes after the circuit breaker has been turned OFF, to be sure the rectifier voltage is below 10 V DC before proceeding.

Power module IPM1 for compressor

1 Disconnect the compressor connector from the main PCB.

2 Check the power module IPM1 in reference with the image and the table below.

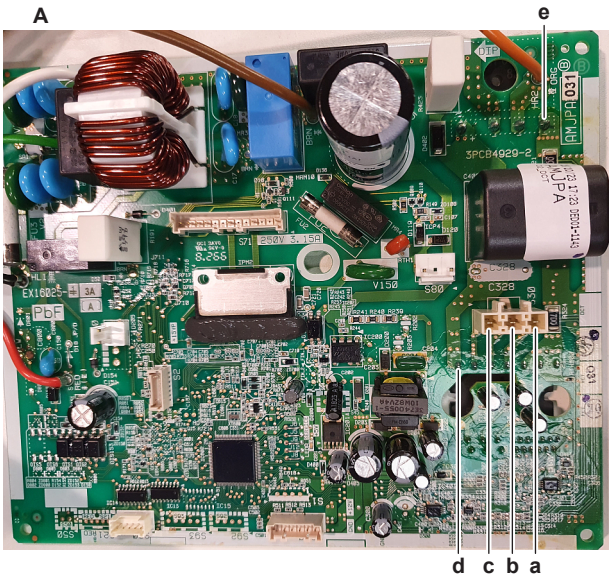

A	(A)RXF20~35A + RXF20+25B + (A)RXF20~42C + (A)RXF42D units
a	U
b	V
c	W
d	DC+
e	DC–

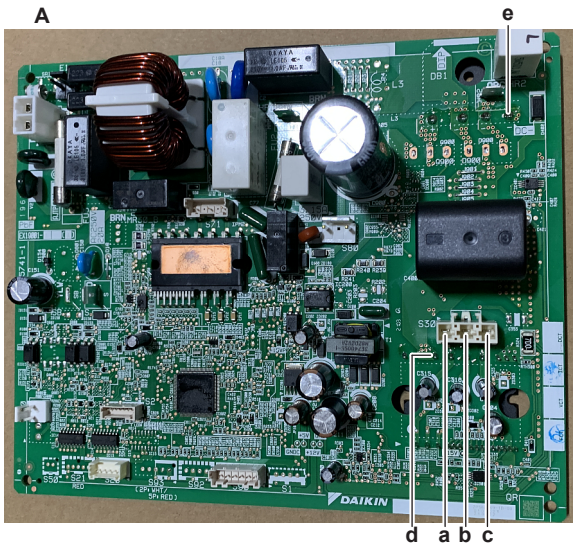

A (A)RXF20~35D + (A)RXF20~42E units
a U
b V
c W
d DC+
e DC–

> **INFORMATION**
> When measuring on the front of the main PCB, make sure to locally remove the protective varnish with the test leads of the multi meter.

VDC	Com	Ref	VDC	Com	Ref
U	DC+	0.501 V	DC+	U	O.L
V	DC+	0.501 V	DC+	V	O.L
W	DC+	0.501 V	DC+	W	O.L
DC–	U	0.501 V	U	DC–	O.L
DC–	V	0.501 V	V	DC–	O.L
DC–	W	0.501 V	W	DC–	O.L

Power module IPM2 for fan motor

1. Disconnect the fan motor connector from the main PCB.
2. Check the power module IPM2 in reference with the image and the table below.

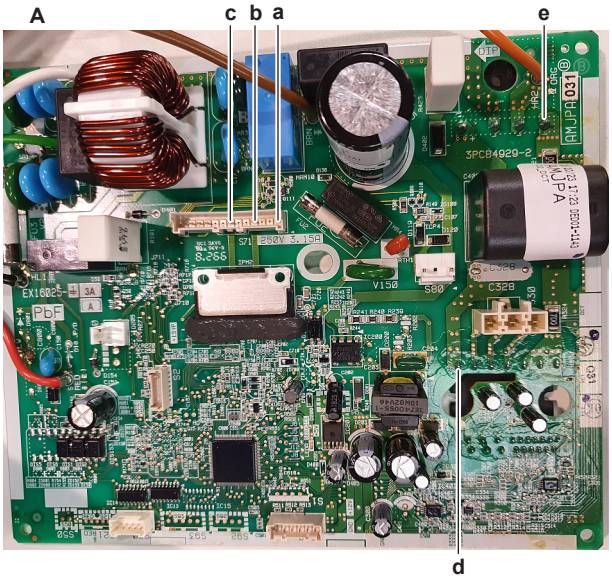

A (A)RXF20~35A + RXF20+25B + (A)RXF20~42C + (A)RXF42D units
a U
b V
c W
d DC+
e DC–

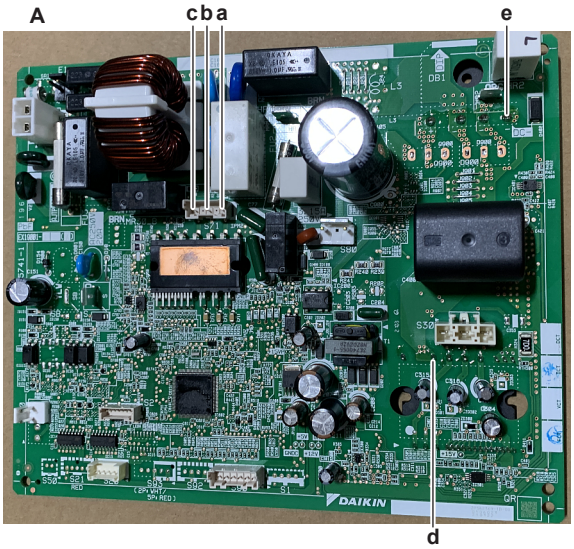

A (A)RXF20~35D + (A)RXF20~42E units
a U
b V
c W
d DC+
e DC–

INFORMATION

When measuring on the front of the main PCB, make sure to locally remove the protective varnish with the test leads of the multi meter.

VDC	Com	Ref	VDC	Com	Ref
U	DC+	0.475 V	DC+	U	O.L
V	DC+	0.475 V	DC+	V	O.L
W	DC+	0.475 V	DC+	W	O.L
DC–	U	0.475 V	U	DC–	O.L

VDC	Com	Ref	VDC	Com	Ref
DC–	V	0.475 V	V	DC–	O.L
DC–	W	0.475 V	W	DC–	O.L

Are the test results OK?	Action
Yes	Power modules are OK. Return to "Checking procedures" [▶ 89] of the main PCB and continue with the next procedure.
No	Replace the main PCB, see "Repair procedures" [▶ 101].

Problem solved?

After all checking procedures listed above have been performed:

Is the problem solved?	Action
Yes	No further actions required.
No	Return to the troubleshooting of the specific error and continue with the next procedure.

Repair procedures

To correct the wiring from the main power supply terminal to the main PCB

(A)RXF20~35D + (A)RXF20~42E units

Prerequisite: Stop the unit operation via the user interface.

Prerequisite: Turn OFF the respective circuit breaker.

1. Remove the required plate work, see "3.10 Plate work" [▶ 124].
2. Make sure that all wires are firmly and correctly connected, see "6.2 Wiring diagram" [▶ 169].
3. Check the continuity of all wires.
4. Replace any damaged or broken wires.

Is the problem solved?	Action
Yes	No further actions required.
No	Return to "Checking procedures" [▶ 89] of the PCB and continue with the next procedure.

To remove the main PCB

(A)RXF20~35A + RXF20+25B + (A)RXF20~42C + (A)RXF42D units

Prerequisite: Stop the unit operation via the user interface.

Prerequisite: Turn OFF the respective circuit breaker.

Prerequisite: Remove the required plate work, see "3.10 Plate work" [▶ 124].

1. Disconnect all connectors from the main PCB.
2. Disconnect the power supply wires from the main power supply terminal X1M.

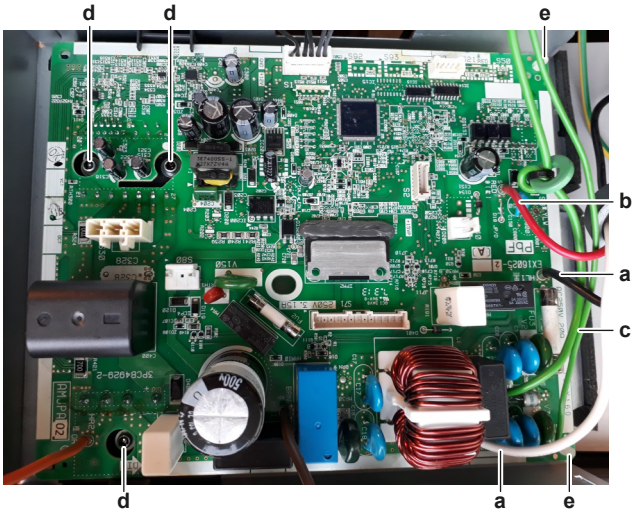

a Power supply wiring
b Red wire
c Ground wire
d Screw
e PCB support

3 Disconnect the red wire from the terminal X1M.

4 Remove the ferrite core (for power supply wiring) from the swich box (unplug fixation plug).

5 Disconnect the Faston connectors from the reactor.

6 Remove the screw and remove the ground wiring from the switch box.

7 Remove the screws from the main PCB.

8 Carefully pull the main PCB from the PCB supports

9 Remove the main PCB from the unit.

10 To install the main PCB, see "Repair procedures" [▸ 101].

(A)RXF20~35D + (A)RXF20~42E units

Prerequisite: Stop the unit operation via the user interface.

Prerequisite: Turn OFF the respective circuit breaker.

Prerequisite: Remove the required plate work, see "3.10 Plate work" [▸ 124].

1 Disconnect all connectors and Faston connectors from the main PCB.

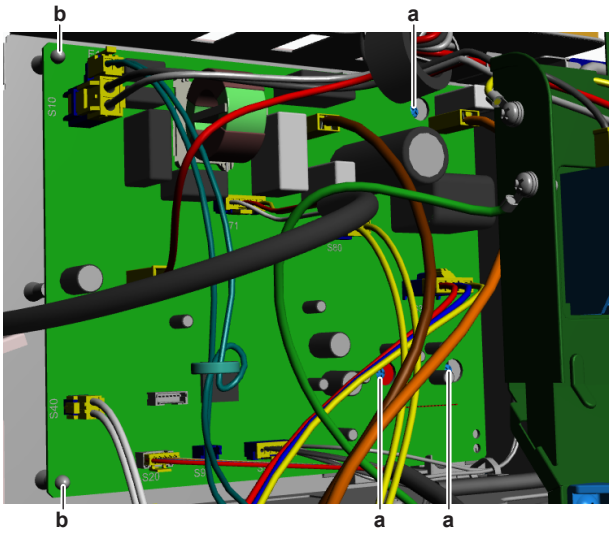

a Screw
b PCB support

2 Remove the screws from the main PCB.

3 Carefully pull the main PCB from the PCB supports

4 Remove the main PCB from the unit.

5 To install the main PCB, see "Repair procedures" [▶ 101].

To install the main PCB

(A)RXF20~35A + RXF20+25B + (A)RXF20~42C + (A)RXF42D units

1 Apply grease to the PCB contact surface of the heat sink. Distribute the grease as evenly as possible.

> **CAUTION**
>
> ALWAYS apply new grease on the PCB heat sink. NOT doing so may cause the PCB to fail due to insufficient cooling.

2 Install the main PCB in the correct location on the PCB supports.

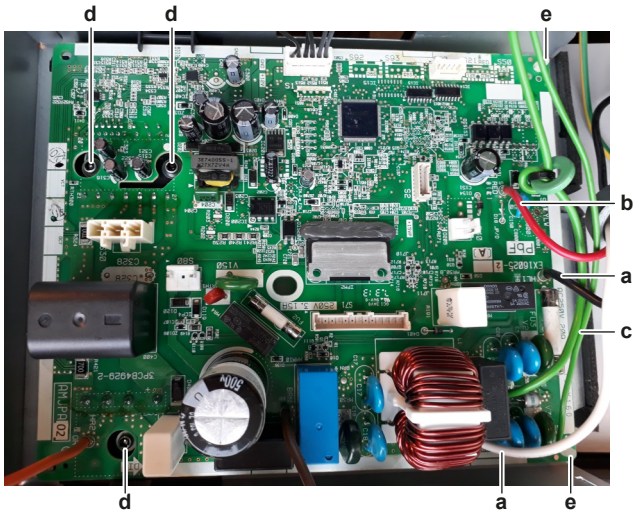

- **a** Power supply wiring
- **b** Red wire
- **c** Ground wire
- **d** Screw
- **e** PCB support

3 Install and tighten the screws.

4 Install the ground wiring on the switch box and fix using the screw.

5 Route the reactor wires towards the reactor and connect the Faston connectors to the reactor.

6 Connect the power supply wiring to the main power supply terminal X1M.

7 Connect the red wire to the main power supply terminal X1M.

8 Fix the ferrite core (for power supply wiring) to the switch box (fixation plug).

9 Connect all connectors to the main PCB.

> **INFORMATION**
>
> Use the wiring diagram and connection diagram for correct installation of the connectors, see "6.2 Wiring diagram" [▶ 169].

(A)RXF20~35D + (A)RXF20~42E units

1 Apply grease to the PCB contact surface of the heat sink. Distribute the grease as evenly as possible.

CAUTION

ALWAYS apply new grease on the PCB heat sink. NOT doing so may cause the PCB to fail due to insufficient cooling.

2 Install the main PCB in the correct location on the PCB supports.

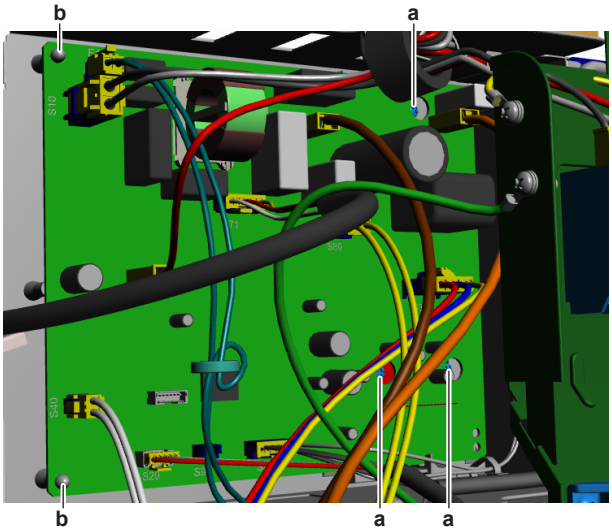

a Screw
b PCB support

3 Install and tighten the screws.

4 Connect all connectors and Faston connectors to the main PCB.

INFORMATION

Use the wiring diagram and connection diagram for correct installation of the connectors, see "6.2 Wiring diagram" [▶ 169].

Is the problem solved?	Action
Yes	No further actions required.
No	Return to "Checking procedures" [▶ 89] of the PCB and continue with the next procedure.

To remove a fuse of the main PCB

(A)RXF20~35A + RXF20+25B + (A)RXF20~42C + (A)RXF42D units

Prerequisite: Stop the unit operation via the user interface.

Prerequisite: Turn OFF the respective circuit breaker.

Prerequisite: Remove the required plate work, see "3.10 Plate work" [▶ 124].

1 Remove the fuse from the PCB.

a Fuse

2 To install a fuse on the main PCB, see "Repair procedures" [▶ 101].

To install a fuse on the main PCB

(A)RXF20~35A + RXF20+25B + (A)RXF20~42C + (A)RXF42D units

WARNING

For continued protection against risk of fire, replace only with same type and rating of fuse.

1 Install the fuse on the correct location on the PCB.

CAUTION

Make sure the fuse is plugged-in correctly (contact with the fuse holder).

a Fuse

Is the problem solved?	Action
Yes	No further actions required.
No	Return to "Checking procedures" [▶ 89] of the PCB and continue with the next procedure.

3.8.2 Class 50~71 units

Checking procedures

> **INFORMATION**
> It is recommended to perform the checks in the listed order.

To perform a power check of the main PCB

Prerequisite: Stop the unit operation via the user interface.

Prerequisite: Turn OFF the respective circuit breaker.

Prerequisite: Remove the required plate work, see "3.10 Plate work" [▶ 124].

1 Turn ON the power of the unit.

2 Measure the voltage between the black and white wires.

Result: The measured voltage MUST be 230 V AC.

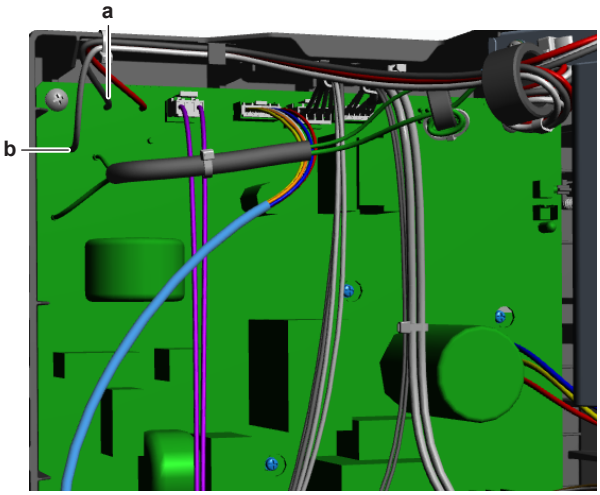

a Black wire
b White wire

Is the measured voltage on the PCB correct?	Action
Yes	Return to "Checking procedures" [▶ 106] of the PCB and continue with the next procedure.
No	Continue with the next step.

3 Check the power supply to the unit, see "4.1.1 Checking procedures" [▶ 153].

Does the unit receive power?	Action
Yes	Replace the main PCB, see "Repair procedures" [▶ 111].
No	Adjust the power supply to the unit, see "4.1.2 Repair procedures" [▶ 154].

To check the HAP LED of the main PCB

Prerequisite: First check the power supply to the main PCB, see "Checking procedures" [▶ 106].

1 Locate the HAP LED on the main PCB.

a HAP LED

> **INFORMATION**
> Make sure the correct software is available on the PCB. If NOT, update using the updater tool.

Does the HAP LED blink in regular intervals (1 second ON/1 second OFF)?	Action
Yes	Return to "Checking procedures" [▸ 106] of the main PCB and continue with the next procedure.
No	Replace the main PCB, see "Repair procedures" [▸ 111].

To check if the correct spare part is installed

Prerequisite: First perform all earlier main PCB checks, see "Checking procedures" [▸ 106].

1. Visit your local spare parts webbank.
2. Enter the model name of your unit and check if the installed spare part number corresponds with the spare part number indicated in the webbank.

> **NOTICE**
> Also check that the correct spare part is installed for the capacity adapter.

Is the correct spare part for the PCB installed?	Action
Yes	Return to "Checking procedures" [▸ 106] of the main PCB and continue with the next procedure.
No	Replace the main PCB, see "Repair procedures" [▸ 111].

To check the wiring of the main PCB

Prerequisite: First perform all earlier main PCB checks, see "Checking procedures" [▸ 106].

Prerequisite: Stop the unit operation via the user interface.

1. Turn OFF the respective circuit breaker.

2 Check that all wires are properly connected and that all connectors are fully plugged-in.

3 Check that no connectors or wires are damaged.

4 Check that the wiring corresponds with the wiring diagram, see "6.2 Wiring diagram" [▶ 169].

> **INFORMATION**
> Correct the wiring as needed.

Is the problem solved?	Action
Yes	No further actions required.
No	Return to "Checking procedures" [▶ 106] of the PCB and continue with the next procedure.

To check the fuse of the main PCB

Prerequisite: First perform all earlier main PCB checks, see "Checking procedures" [▶ 106].

1 Measure the continuity of the fuse. If no continuity is measured, the fuse has blown.

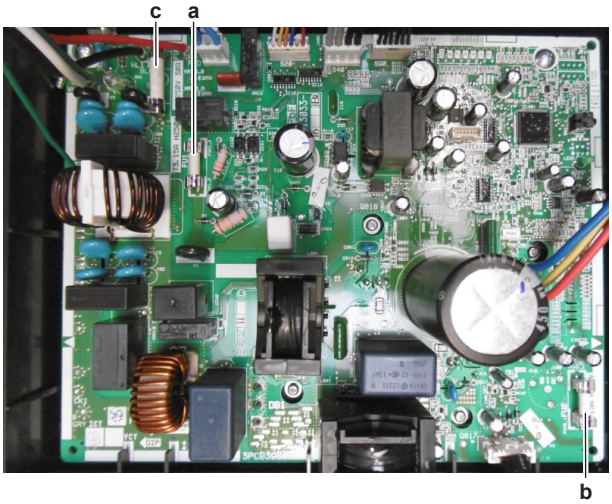

a Fuse F1U
b Fuse F2U
c Fuse F3U

Blown fuse on the main PCB?	Action
Yes	Replace the main PCB, see "Repair procedures" [▶ 111].
No	Return to "Checking procedures" [▶ 106] of the main PCB and continue with the next procedure.

To check the rectifier voltage of the main PCB

Prerequisite: First perform all earlier main PCB checks, see "Checking procedures" [▶ 106].

1 Turn ON the power of the unit.

2 Measure the voltage on the rectifier voltage check terminals (+ and –) on the main PCB.

Result: The measured voltage MUST be approximately 300~350 V DC.

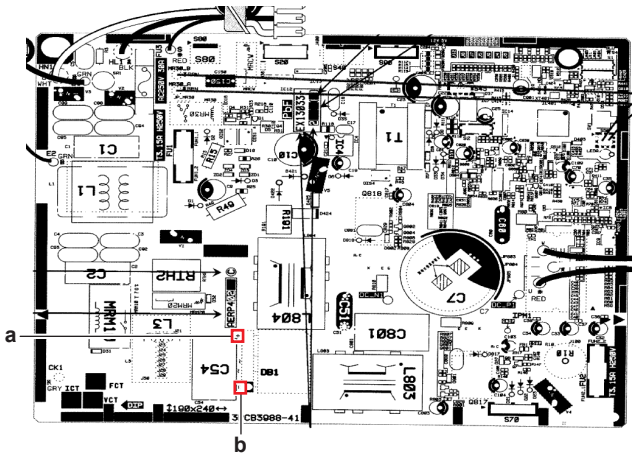

a + terminal
b – terminal

> **INFORMATION**
> When measuring on the front of the main PCB, make sure to locally remove the protective varnish with the test leads of the multi meter.

Is the measured rectifier voltage correct?	Action
Yes	Perform a check of the power module, see "Checking procedures" [▸ 106].
No	Replace the main PCB, see "Repair procedures" [▸ 111].

To perform a diode module check

1 First check the rectifier voltage of the main PCB, see "Checking procedures" [▸ 106].

> **INFORMATION**
> If the rectifier voltage is OK, the diode module is OK. If rectifier voltage is NOT OK, replace the main PCB.
>
> Below procedure describes how to check the diode module itself.

Prerequisite: Stop the unit operation via the user interface.

2 Turn OFF the respective circuit breaker.

> **DANGER: RISK OF ELECTROCUTION**
> Wait for at least 10 minutes after the circuit breaker has been turned OFF, to be sure the rectifier voltage is below 10 V DC before proceeding.

3 Check the diode module in reference with the image and the table below.

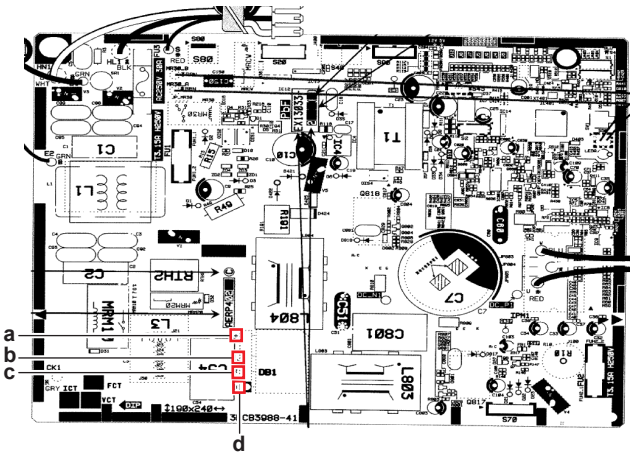

a V DC out (+)
b V AC in
c V AC in
d V DC out (–)

> **INFORMATION**
> When measuring on the front of the main PCB, make sure to locally remove the protective varnish with the test leads of the multi meter.

VDC	Com	Ref	VDC	Com	Ref
d	b	0.51~0.52 V	b	d	O.L
b	a	0.51~0.52 V	a	b	O.L
d	c	0.51~0.52 V	c	d	O.L
c	a	0.51~0.52 V	a	c	O.L

4 If the diode module is NOT OK, replace the main PCB, see "Repair procedures" [▸ 111].

To perform a power module check

Prerequisite: First check the rectifier voltage of the main PCB, see "Checking procedures" [▸ 106].

Prerequisite: Stop the unit operation via the user interface.

1 Turn OFF the respective circuit breaker.

> **DANGER: RISK OF ELECTROCUTION**
> Wait for at least 10 minutes after the circuit breaker has been turned OFF, to be sure the rectifier voltage is below 10 V DC before proceeding.

Power module IPM1 for compressor

1 Disconnect the compressor connector.

2 Check the power module IPM1 in reference with the image and the table below.

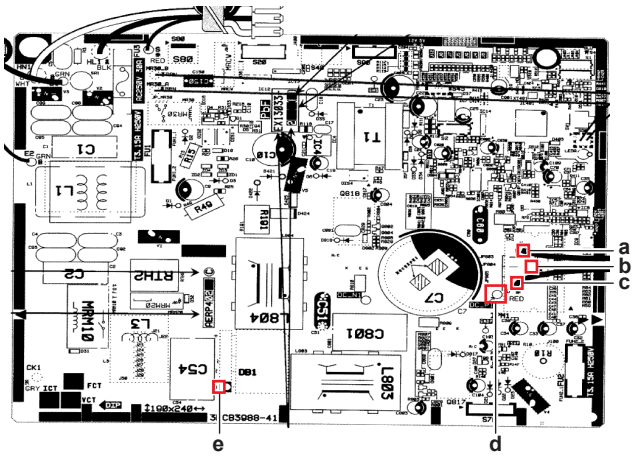

a U
b V
c W
d DC+
e DC–

> **INFORMATION**
>
> When measuring on the front of the main PCB, make sure to locally remove the protective varnish with the test leads of the multi meter.

VDC	Com	Ref	VDC	Com	Ref
U	DC+	0.501 V	DC+	U	O.L
V	DC+	0.501 V	DC+	V	O.L
W	DC+	0.501 V	DC+	W	O.L
DC–	U	0.501 V	U	DC–	O.L
DC–	V	0.501 V	V	DC–	O.L
DC–	W	0.501 V	W	DC–	O.L

Are the test results OK?	Action
Yes	Power module is OK. Return to "Checking procedures" [▶ 106] of the main PCB and continue with the next procedure.
No	Replace the main PCB, see "Repair procedures" [▶ 111].

Problem solved?

After all checking procedures listed above have been performed:

Is the problem solved?	Action
Yes	No further actions required.
No	Return to the troubleshooting of the specific error and continue with the next procedure.

Repair procedures

To remove the main PCB

Prerequisite: Stop the unit operation via the user interface.

Prerequisite: Turn OFF the respective circuit breaker.

Prerequisite: Remove the required plate work, see "3.10 Plate work" [▶ 124].

1 Disconnect the power supply wires from the main power supply terminal X1M.

2 Remove the ferrite core (for power supply wires) from the switch box (unplug fixation plug).

3 Cut the tie strap that fixes the power supply wires to the switch box.

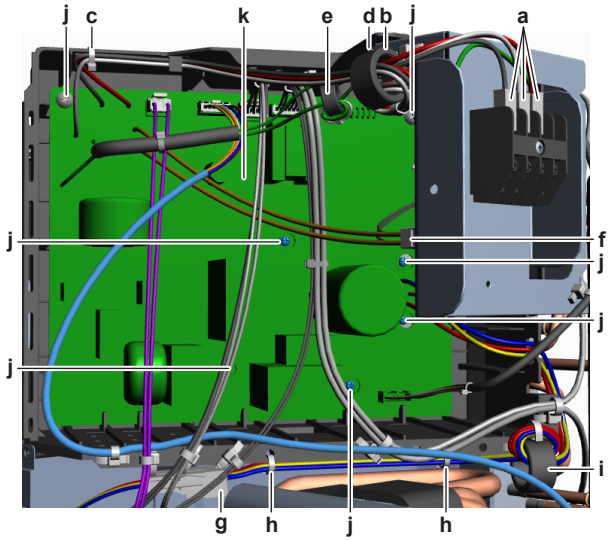

- **a** Power supply wires from X1M
- **b** Ferrite core (power supply wires)
- **c** Tie strap (power supply wires)
- **d** Screw (ground wiring)
- **e** Ferrite core (ground wiring)
- **f** Connector X12A
- **g** Compressor connector
- **h** Tie strap (compressor harness)
- **i** Ferrite core (compressor harness)
- **j** Screw
- **k** Main PCB

4 Remove the screw and remove the ground wiring from the switch box.

5 If applicable: Disconnect the connector X12A.

6 Disconnect the compressor connector.

7 Cut the tie straps that fix the compressor harness to the switch box.

8 Remove the ferrite core (for compressor harness) from the switch box (unplug fixation plug).

9 Disconnect all other connectors from the main PCB.

10 Remove the screws from the main PCB.

11 Remove the main PCB from the unit.

12 To install the main PCB, see "Repair procedures" [▶ 111].

To install the main PCB

1 Apply grease to the PCB contact surface of the heat sink. Distribute the grease as evenly as possible.

> **CAUTION**
>
> ALWAYS apply new grease on the PCB heat sink. NOT doing so may cause the PCB to fail due to insufficient cooling.

2 Install the main PCB in the correct location in the switch box.

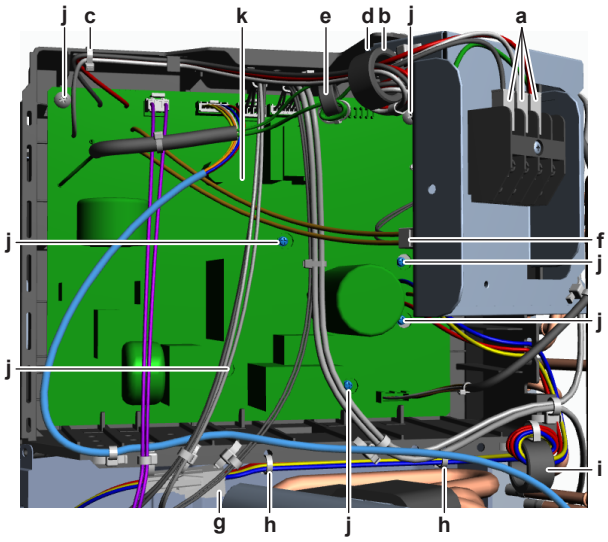

- **a** Power supply wires from X1M
- **b** Ferrite core (power supply wires)
- **c** Tie strap (power supply wires)
- **d** Screw (ground wiring)
- **e** Ferrite core (ground wiring)
- **f** Connector X12A
- **g** Compressor connector
- **h** Tie strap (compressor harness)
- **i** Ferrite core (compressor harness)
- **j** Screw
- **k** Main PCB

3 Install and tighten the screws.

4 Fix the ferrite core (for compressor harness) to the switch box (fixation plug).

5 Install new tie straps to fix the compressor harness to the switch box.

6 Install the ground wiring on the switch box and fix using the screw.

7 If applicable: Connect the connector X12A.

8 Fix the ferrite core (for power supply wiring) to the switch box (fixation plug).

9 Connect the power supply wiring to the main power supply terminal X1M.

10 Fix the power supply wiring to the switch box using a new tie strap.

11 Connect all other connectors to the main PCB.

INFORMATION

Use the wiring diagram and connection diagram for correct installation of the connectors, see "6.2 Wiring diagram" [▶ 169].

Is the problem solved?	Action
Yes	No further actions required.
No	Return to "Checking procedures" [▶ 106] of the PCB and continue with the next procedure.

3.9 Outdoor unit fan motor

3.9.1 Class 20~42 units

Checking procedures

> **INFORMATION**
> It is recommended to perform the checks in the listed order.

To perform a mechanical check of the propeller fan blade assembly

Prerequisite: Stop the unit operation via the user interface.

Prerequisite: Turn OFF the respective circuit breaker.

Prerequisite: Remove the required plate work, see "3.10 Plate work" [▸ 124].

1. If propeller fan blade touches the bell mounth, check if the fan motor is correctly mounted on its base, see "Repair procedures" [▸ 117].
2. Check the state of the propeller fan blade assembly for damage, deformations and cracks.

Is the propeller fan blade assembly damaged?	Action
Yes	Replace the propeller fan blade assembly, see "Repair procedures" [▸ 117].
No	Perform a mechanical check of the DC fan motor assembly, see "Checking procedures" [▸ 114].

To perform a mechanical check of the DC fan motor assembly

Prerequisite: First perform a mechanical check of the propeller fan blade assembly, see "Checking procedures" [▸ 114].

1. Visually check:
   - For any burnt-out part or wire. If found, replace the fan motor, see "Repair procedures" [▸ 117].
   - That fan motor fixation bolts are correctly installed and fixed. Correct as needed.
2. Manually rotate the fan motor shaft. Check that it rotates smoothly.
3. Check the friction of the DC fan motor shaft bearing.

Is the DC fan motor shaft friction normal?	Action
Yes	Perform an electrical check of the DC fan motor assembly, see "Checking procedures" [▸ 114].
No	Replace the DC fan motor assembly, see "Repair procedures" [▸ 117].

To perform an electrical check of the DC fan motor assembly

(A)RXF20~35A + RXF20+25B + (A)RXF20~42C + (A)RXF42D units

1. First perform a mechanical check of the DC fan motor assembly, see "Checking procedures" [▸ 114].

INFORMATION

Check the DC fan motor power supply (voltage) circuit on the PCB.

2 Turn ON the power of the unit.

3 Activate `Cooling` or `Heating` operation via the user interface.

4 Check the functioning of the outdoor unit fan.

Outdoor unit fan ...	Action
Rotates continuously (without interruption)	DC fan motor assembly is OK. Return to the troubleshooting of the specific error and continue with the next procedure.
Does not rotate or rotates for a short time	Continue with the next step.

5 Turn OFF the unit via the user interface.

6 Turn OFF the respective circuit breaker.

DANGER: RISK OF ELECTROCUTION

Wait for at least 10 minutes after the circuit breaker has been turned OFF, to be sure the rectifier voltage is below 10 V DC before proceeding.

7 Check that the DC fan motor connector is properly connected to the PCB.

8 Unplug the DC fan motor connector and measure the resistance on the connector pins shown below. The measured resistance MUST be:

VDC	Comm	Resistance
1	4	71~79 Ω
1	7	
4	7	
10 (GND)	1	OL
	4	
	7	
	11	1.96 kΩ
	12	10.9 kΩ
	13	

INFORMATION

The measured resistance values may deviate from the listed values due to instability during the measurements.

Are the measured resistance values correct?	Action
Yes	Continue with the next step.
No	Replace the DC fan motor, see "Repair procedures" [▸ 117].

9 Turn ON the power of the unit.

10 With the DC fan motor connector S71 disconnected from the main PCB, measure the voltage on the connector pins 10-11 (= fan motor control) on the inverter PCB.

Result: The voltage MUST be 15±10% V DC.

Is the measured voltage correct?	Action
Yes	Continue with the next step.
No	Perform a check of the main PCB, see "Checking procedures" [▸ 89].

11 Connect the DC fan motor connector to the PCB. Remove the plastic insert from the connector for easier measurement.

> **CAUTION**
> Ensure that the system CANNOT start the fan. Disable all modes (heating, cooling, ...) on the unit. The unit MUST be kept powered.

12 Manually (slowly) rotate the fan blade propeller 1 turn and measure the voltage on the DC fan motor connector pins 10-12.

Result: 4 pulses MUST be measured.

13 Repeat the previous step and measure the voltage on the DC fan motor connector pins 10-13.

Result: 4 pulses MUST be measured.

Pulses are measured during fan blade propeller rotation?	Action
Yes	Perform a check of the main PCB, see "Checking procedures" [▸ 89].
No	Replace the DC fan motor, see "Repair procedures" [▸ 117].

(A)RXF20~35D + (A)RXF20~42E units

1 First perform a mechanical check of the DC fan motor assembly, see "Checking procedures" [▸ 114].

> **INFORMATION**
> Check the DC fan motor power supply (voltage) circuit on the PCB.

2 Turn ON the power of the unit.

3 Activate `Cooling` or `Heating` operation via the user interface.

4 Check the functioning of the outdoor unit fan.

Outdoor unit fan ...	Action
Rotates continuously (without interruption)	DC fan motor assembly is OK. Return to the troubleshooting of the specific error and continue with the next procedure.
Does not rotate or rotates for a short time	Continue with the next step.

5 Turn OFF the unit via the user interface.

6 Turn OFF the respective circuit breaker.

DANGER: RISK OF ELECTROCUTION

Wait for at least 10 minutes after the circuit breaker has been turned OFF, to be sure the rectifier voltage is below 10 V DC before proceeding.

7 Check that the DC fan motor connector is properly connected to the PCB.

8 Unplug the DC fan motor connector and measure the resistance between the pins 1-3, 1-5, and 3-5 of the DC fan motor connector.

Result: All measurements MUST be 83.2~92 Ω.

INFORMATION

Winding resistance values above are given for reference. You should NOT be reading a value in kΩ or a short-circuit. Make sure that the propeller fan blade does NOT rotate, as this could affect resistance measurements.

9 Set the Megger voltage to 500 V DC or 1000 V DC.

10 Measure the insulation resistance for the motor terminals. Measurements between each phase and fan motor body (e.g. axle) MUST be >1000 MΩ.

Are the measured resistance values correct?	Action
Yes	Perform a check of the main PCB, see "Checking procedures" [▸ 89].
No	Replace the DC fan motor, see "Repair procedures" [▸ 117].

Problem solved?

After all checking procedures listed above have been performed:

Is the problem solved?	Action
Yes	No further actions required.
No	Return to the troubleshooting of the specific error and continue with the next procedure.

Repair procedures

To remove the propeller fan blade assembly

Prerequisite: Stop the unit operation via the user interface.

Prerequisite: Turn OFF the respective circuit breaker.

1 Remove the required plate work, see "3.10 Plate work" [▸ 124].

2 Remove the nut that fixes the propeller fan blade assembly.

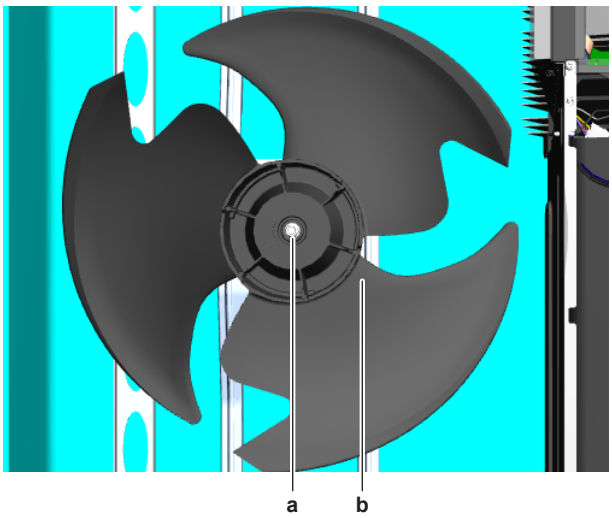

a Nut
b Propeller fan blade assembly

3 Pull and remove the propeller fan blade assembly from the DC fan motor assembly.

> **INFORMATION**
> Use a pulley remover if the propeller cannot be removed manually.

4 To install the propeller fan blade assembly, see "Repair procedures" [▸ 117].

To remove the DC fan motor assembly

1 Remove the propeller fan blade assembly from the DC fan motor assembly, see "Repair procedures" [▸ 117].
2 Disconnect the DC fan motor connector from the main PCB.
3 Unlock the ferrite bead (if applicable).
4 Cut the tie strap.
5 Detach the DC fan motor harness from the switch box.
6 Slightly bend the harness retainers to detach the DC fan motor harness.
7 Remove the 4 screws that fix the DC fan motor assembly.
8 Remove the DC fan motor assembly from the unit.
9 To install the DC fan motor assembly, see "Repair procedures" [▸ 117].

To install the DC fan motor assembly

1 Install the DC fan motor assembly in the correct location.
2 Fix the DC fan motor assembly to the unit by tightening the screws.
3 Route the DC fan motor harness through the harness retainers and bend the harness retainers to attach the DC fan motor harness.
4 Attach the DC fan motor harness to the switch box.
5 Install a new tie strap to fix the DC fan motor harness to the switch box.
6 Connect the DC fan motor connector to the connector on the main PCB.
7 Lock the ferrite bead (if applicable).
8 Install the propeller fan blade assembly, see "Repair procedures" [▸ 117].

To install the propeller fan blade assembly

1 Install the propeller fan blade assembly on the DC fan motor assembly.

CAUTION

Do NOT install a damaged propeller fan blade assembly.

2 Install and tighten the nut to fix the propeller fan blade assembly.

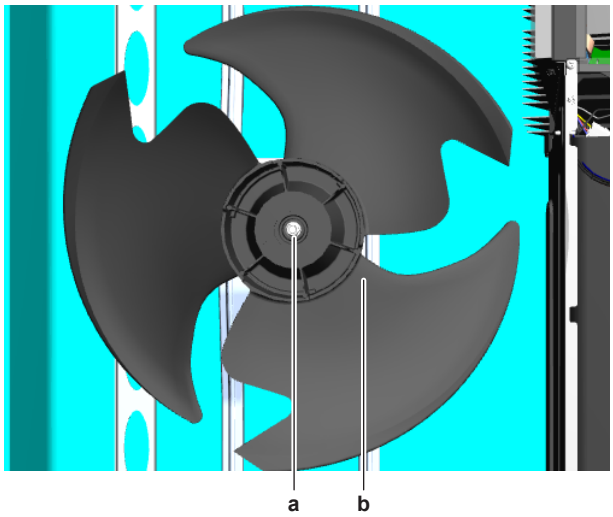

a Nut
b Propeller fan blade assembly

Is the problem solved?	Action
Yes	No further actions required.
No	Return to "Checking procedures" [▸ 114] of the outdoor unit fan motor and continue with the next procedure.

3.9.2 Class 50~71 units

Checking procedures

INFORMATION

It is recommended to perform the checks in the listed order.

To perform a mechanical check of the propeller fan blade assembly

Prerequisite: Stop the unit operation via the user interface.

Prerequisite: Turn OFF the respective circuit breaker.

Prerequisite: Remove the required plate work, see "3.10 Plate work" [▸ 124].

1 If propeller fan blade touches the bell mounth, check if the fan motor is correctly mounted on its base, see "Repair procedures" [▸ 122].

2 Check the state of the propeller fan blade assembly for damage, deformations and cracks.

Is the propeller fan blade assembly damaged?	Action
Yes	Replace the propeller fan blade assembly, see "Repair procedures" [▸ 122].

Is the propeller fan blade assembly damaged?	Action
No	Perform a mechanical check of the DC fan motor assembly, see "Checking procedures" [▸ 119].

To perform a mechanical check of the DC fan motor assembly

Prerequisite: First perform a mechanical check of the propeller fan blade assembly, see "Checking procedures" [▸ 119].

1 Visually check:
   - For any burnt-out part or wire. If found, replace the fan motor, see "Repair procedures" [▸ 122].
   - That fan motor fixation bolts are correctly installed and fixed. Correct as needed.

2 Manually rotate the fan motor shaft. Check that it rotates smoothly.

3 Check the friction of the DC fan motor shaft bearing.

Is the DC fan motor shaft friction normal?	Action
Yes	Perform an electrical check of the DC fan motor assembly, see "Checking procedures" [▸ 119].
No	Replace the DC fan motor assembly, see "Repair procedures" [▸ 122].

To perform an electrical check of the DC fan motor assembly

1 First perform a mechanical check of the DC fan motor assembly, see "Checking procedures" [▸ 119].

> **INFORMATION**
> Check the DC fan motor power supply (voltage) circuit on the PCB.

2 Turn ON the power of the unit.

3 Activate `Cooling` or `Heating` operation via the user interface.

4 Check the functioning of the outdoor unit fan.

Outdoor unit fan ...	Action
Rotates continuously (without interruption)	DC fan motor assembly is OK. Return to the troubleshooting of the specific error and continue with the next procedure.
Does not rotate or rotates for a short time	Continue with the next step.

> **INFORMATION**
> The DC fan motor connector MUST be plugged into the appropriate PCB.

5 Confirm via the service monitoring tool that the DC fan motor assembly receives an ON signal.

6 Turn OFF the unit via the user interface.

7 Turn OFF the respective circuit breaker.

DANGER: RISK OF ELECTROCUTION

Wait for at least 10 minutes after the circuit breaker has been turned OFF, to be sure the rectifier voltage is below 10 V DC before proceeding.

8 Disconnect the DC fan motor connector S70 and measure the resistance on the connector pins shown below. The measured resistance MUST be:

VDC	Comm	Resistance
1	4	>1 MΩ
2	4	>100 kΩ
3	4	>100 Ω
7	4	>100 kΩ

INFORMATION

The measured resistance values may deviate from the listed values due to instability during the measurements.

DC fan motor resistance measurements are correct?	Action
Yes	Continue with the next step.
No	Replace the DC fan motor, see "Repair procedures" [▶ 122].

9 Turn ON the power of the unit.

10 With the DC fan motor connector S70 disconnected from the main PCB, measure the voltage on the connector pins 4-7 (= fan motor power supply) on the main PCB.

Result: The voltage MUST be 200~390 V DC.

11 Measure the voltage on the connector pins 4-3 (= fan motor control) on the main PCB.

Result: The voltage MUST be 15±10% V DC.

Are both measured voltages correct?	Action
Yes	Continue with the next step.
No	Perform a check of the main PCB, see "Checking procedures" [▶ 89].

12 Measure the voltage on the DC fan motor connector S70 pins 2-4 (= rotation command) on the PCB.

Result: The measured voltage should be 0~7 V DC. It should NOT be 0 V DC.

Is the measured voltage 0 V DC?	Action
Yes	Perform a check of the main PCB, see "Checking procedures" [▶ 89].
No	Continue with the next step.

13 Connect the DC fan motor connector to the PCB. Remove the plastic insert from the connector for easier measurement.

CAUTION

Ensure that the system CANNOT start the fan. Disable all modes (heating, cooling, ...) on the unit. The unit MUST be kept powered.

14 Manually (slowly) rotate the fan blade propeller 1 turn and measure the voltage on the DC fan motor connector pins 1-4.

Result: 4 pulses MUST be measured.

Pulses are measured during fan blade propeller rotation?	Action
Yes	Perform a check of the main PCB, see "Checking procedures" [▸ 89].
No	Replace the DC fan motor, see "Repair procedures" [▸ 122].

Problem solved?

After all checking procedures listed above have been performed:

Is the problem solved?	Action
Yes	No further actions required.
No	Return to the troubleshooting of the specific error and continue with the next procedure.

Repair procedures

To remove the propeller fan blade assembly

Prerequisite: Stop the unit operation via the user interface.

Prerequisite: Turn OFF the respective circuit breaker.

1 Remove the required plate work, see "3.10 Plate work" [▸ 124].

2 Remove the nut that fixes the propeller fan blade assembly.

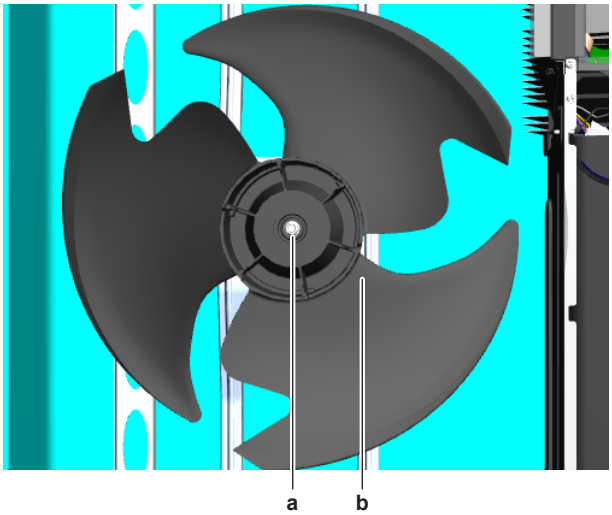

a Nut
b Propeller fan blade assembly

3 Pull and remove the propeller fan blade assembly from the DC fan motor assembly.

INFORMATION

Use a pulley remover if the propeller cannot be removed manually.

4 To install the propeller fan blade assembly, see "Repair procedures" [▶ 122].

To remove the DC fan motor assembly

1 Remove the propeller fan blade assembly from the DC fan motor assembly, see "Repair procedures" [▶ 122].

DANGER: RISK OF ELECTROCUTION

Wait for at least 10 minutes after the circuit breaker has been turned OFF, to be sure the rectifier voltage is below 10 V DC before proceeding.

2 Disconnect the DC fan motor connector from the main PCB.

3 Unlock the ferrite bead (if applicable).

4 Cut the tie strap.

5 Detach the DC fan motor harness from the switch box.

6 Slightly bend the harness retainers to detach the DC fan motor harness.

7 Remove the 4 screws that fix the DC fan motor assembly.

8 Remove the DC fan motor assembly from the unit.

9 To install the DC fan motor assembly, see "Repair procedures" [▶ 122].

To install the DC fan motor assembly

1 Install the DC fan motor assembly in the correct location.

2 Fix the DC fan motor assembly to the unit by tightening the screws.

3 Route the DC fan motor harness through the harness retainers and bend the harness retainers to attach the DC fan motor harness.

4 Attach the DC fan motor harness to the switch box.

5 Install a new tie strap to fix the DC fan motor harness to the switch box.

6 Connect the DC fan motor connector to the connector on the main PCB.

7 Lock the ferrite bead (if applicable).

8 Install the propeller fan blade assembly, see "Repair procedures" [▶ 122].

To install the propeller fan blade assembly

1 Install the propeller fan blade assembly on the DC fan motor assembly.

CAUTION

Do NOT install a damaged propeller fan blade assembly.

2 Install and tighten the nut to fix the propeller fan blade assembly.

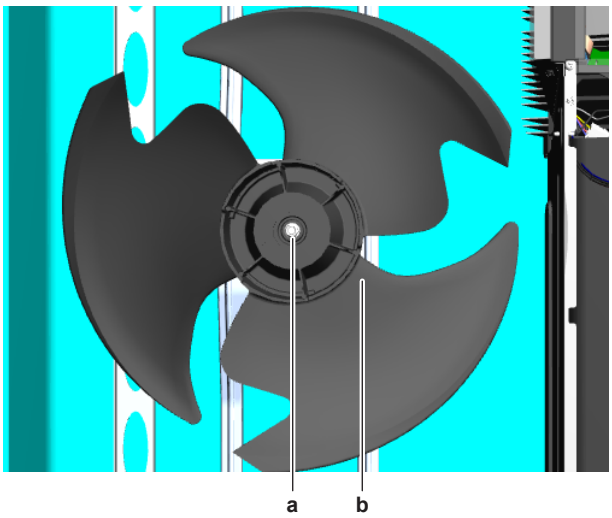

a Nut
b Propeller fan blade assembly

Is the problem solved?	Action
Yes	No further actions required.
No	Return to "Checking procedures" [▸ 119] of the outdoor unit fan motor and continue with the next procedure.

3.10 Plate work

3.10.1 Outdoor unit

To remove the refrigerant connection cover

DANGER: RISK OF ELECTROCUTION

DANGER: RISK OF BURNING/SCALDING

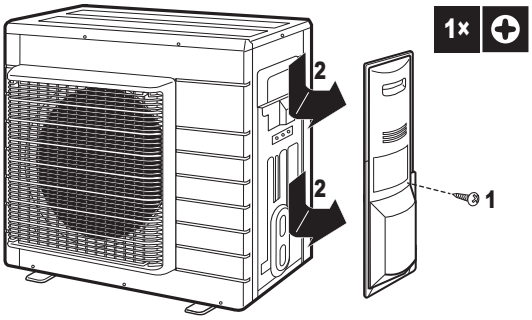

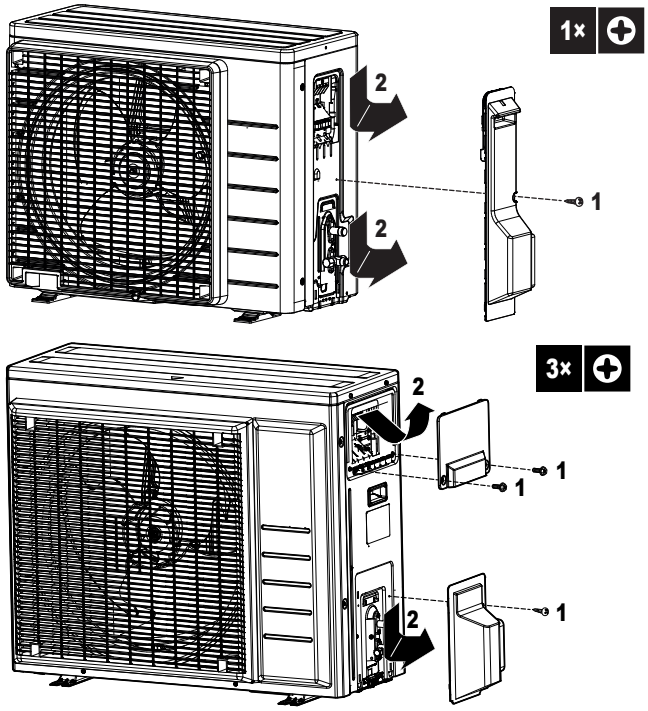

To remove the top plate

> **INFORMATION**
> This procedure is just an example and may differ on some details for your actual unit.

Prerequisite: Stop the unit operation via the user interface.

1 Turn OFF the respective circuit breaker.

> **DANGER: RISK OF ELECTROCUTION**
> Wait for at least 10 minutes after the circuit breaker has been turned OFF, to be sure the rectifier voltage is below 10 V DC before proceeding.

2 Loosen and remove the screws that fix the top plate.

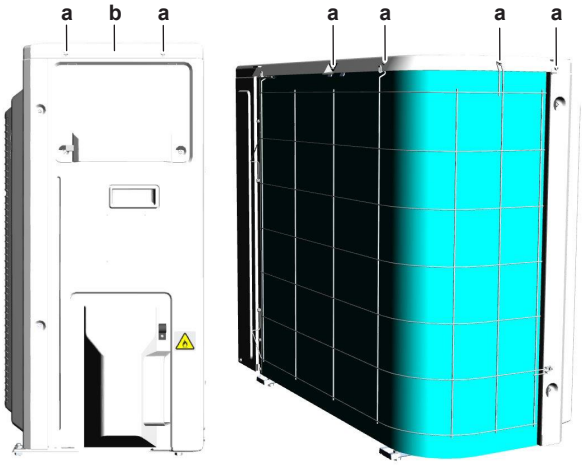

a Screw
b Top plate

3 Remove the top plate.

To remove the front plate

> **INFORMATION**
> This procedure is just an example and may differ on some details for your actual unit.

Prerequisite: Remove the top plate, see "3.10 Plate work" [▸ 124].

1 Loosen and remove the screws that fix the front plate.

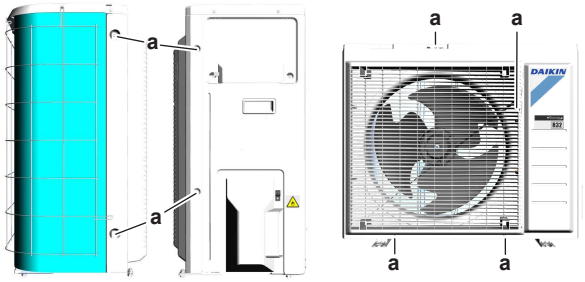

a Screw
b Front plate

2 Remove the front plate.

To remove the compressor sound insulation

> **INFORMATION**
> This procedure is just an example and may differ on some details for your actual unit.

Prerequisite: Remove the front plate, see "3.10 Plate work" [▸ 124].

1 Untwist the cord and remove the compressor sound insulation.

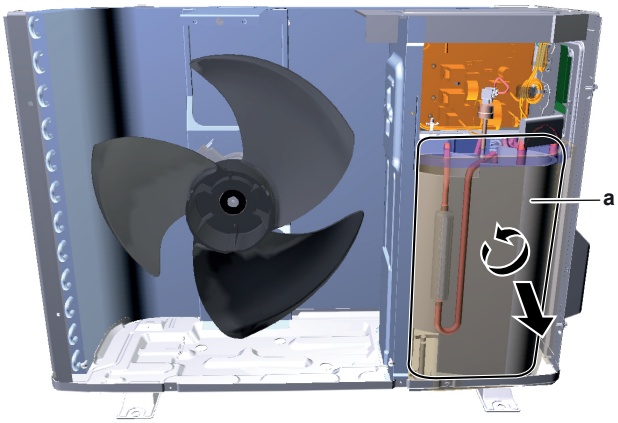

a Compressor sound insulation

To remove the switch box

> **INFORMATION**
> This procedure is just an example and may differ on some details for your actual unit.

Prerequisite: Stop the unit operation via the user interface.

Prerequisite: Turn OFF the respective circuit breaker.

Prerequisite: Remove the required plate work, see "3.10 Plate work" [▸ 124].

1 Remove the insulation on the upper side of the switch box.

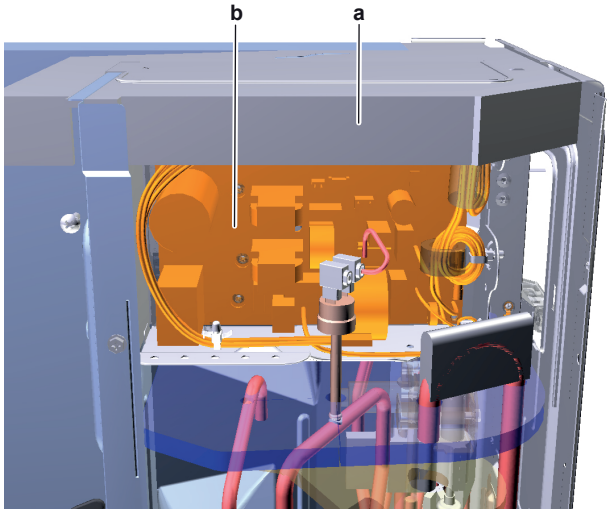

a Insulation
b Main PCB

2 Disconnect all connectors from the main PCB.

3 Disconnect the electrical power supply wiring from the wire terminals.

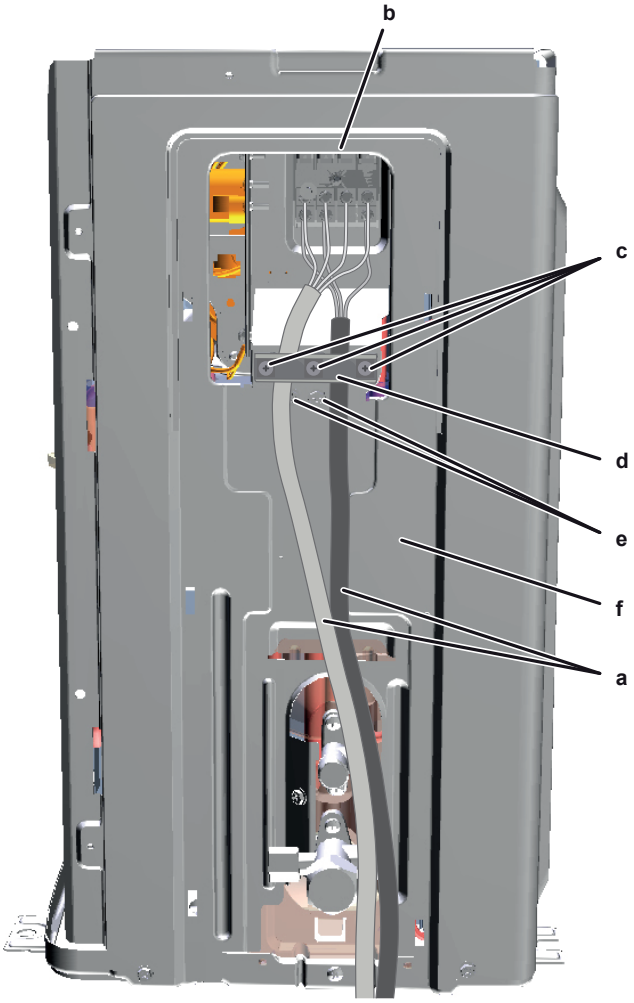

a Electrical power supply wiring
b Wire terminals
c Screws
d Wire clamp
e Screws
f Right side plate assembly

4 Remove the screws that fix the wire clamp.

5 Remove the wire clamp.

6 Remove the screws that fix the right side plate assembly.

7 Cut the cable tie.

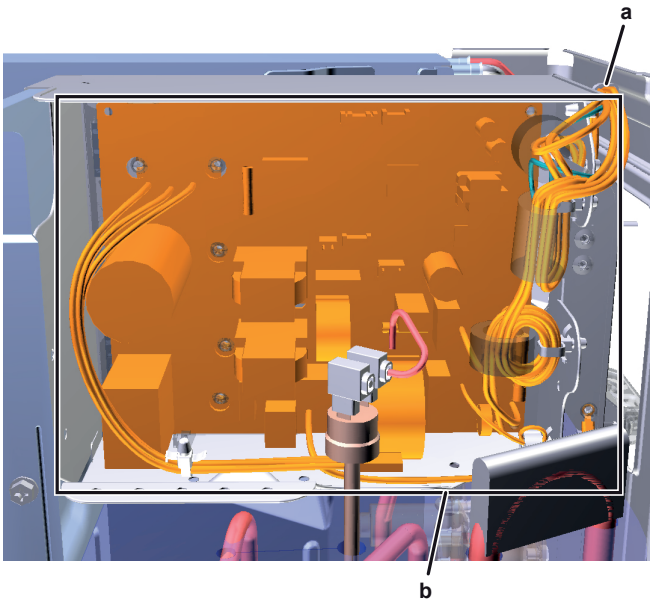

a Cable tie
b Switch box

8 Lift and remove the switch box from the outdoor unit.

9 To install the switch box, see "3.10 Plate work" [▸ 124].

To install the switch box

> **INFORMATION**
> This procedure is just an example and may differ on some details for your actual unit.

1 Install the switch box on the correct location in the outdoor unit.

2 Install the right side plate assembly on the outdoor unit and fix it using the screws.

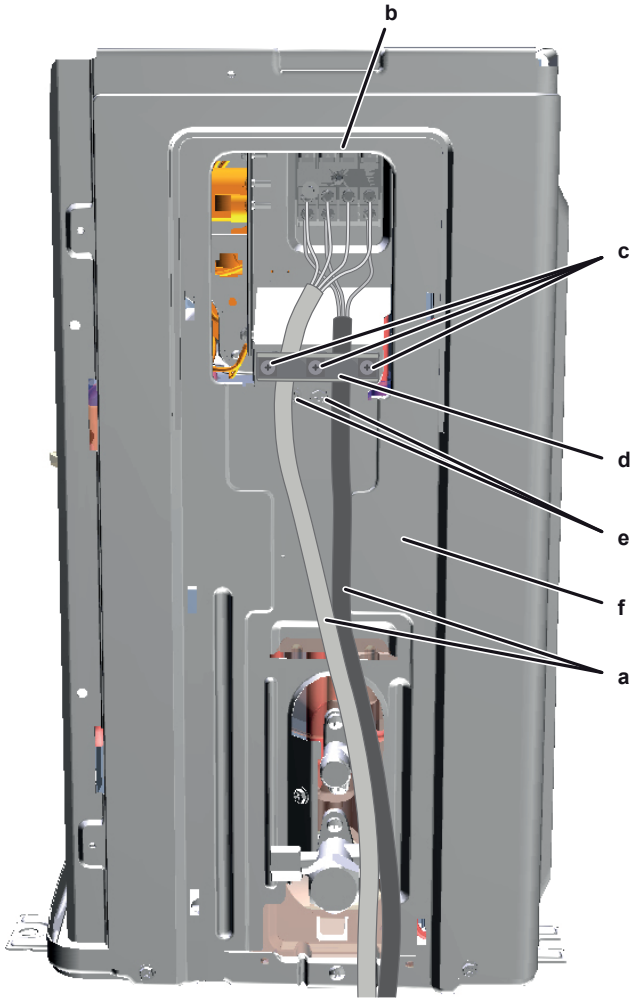

a Electrical power supply wiring
b Wire terminals
c Screws
d Wire clamp
e Screws
f Right side plate assembly

3 Connect the electrical power supply wiring to the wire terminals.

4 Install the wire clamp and fix it using the screws.

5 Connect all connectors to the main PCB.

INFORMATION

Use the wiring diagram and connection diagram for correct installation of the connectors, see "6.2 Wiring diagram" [▶ 169].

WARNING

When reconnecting a connector to the PCB, make sure to connect it on the correct location and do NOT apply force, as this may damage the connector or connector pins of the PCB.

6 Fix the wiring to the switch box using a new cable tie.

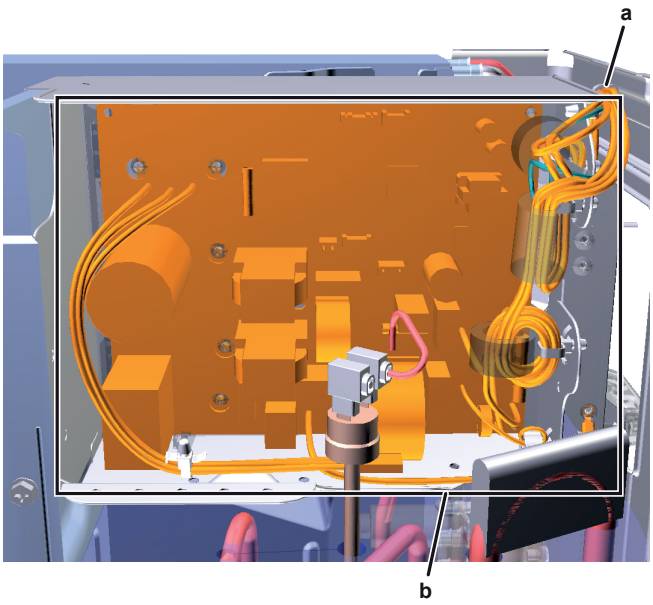

a Cable tie
b Switch box

7 Install the insulation on the upper side of the switch box.

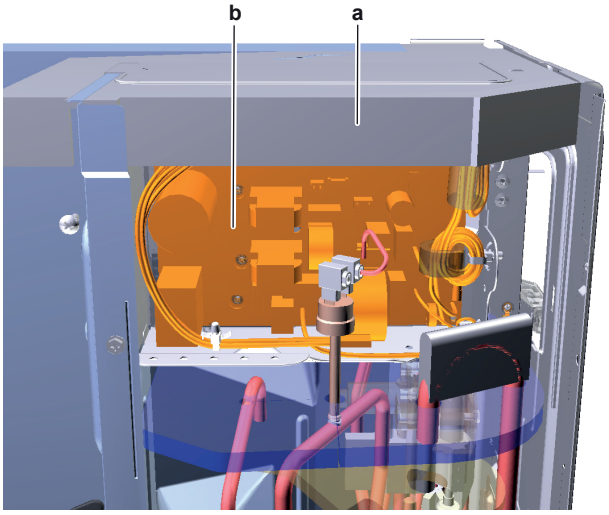

a Insulation
b Main PCB

3.10.2 Indoor unit

To open the front panel

1 Hold the front panel by the panel tabs on both sides and open it.

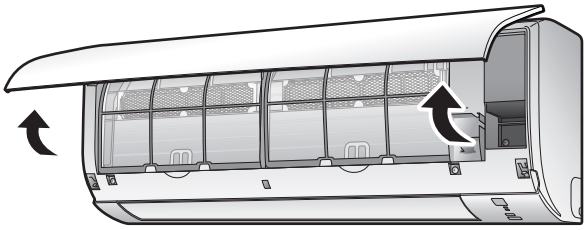

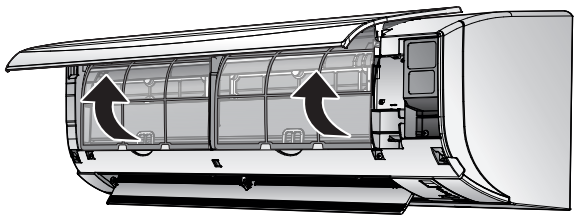

To close the front panel

1. Set the filters as they were.
2. Gently press the front panel at both sides and at the center until it clicks.

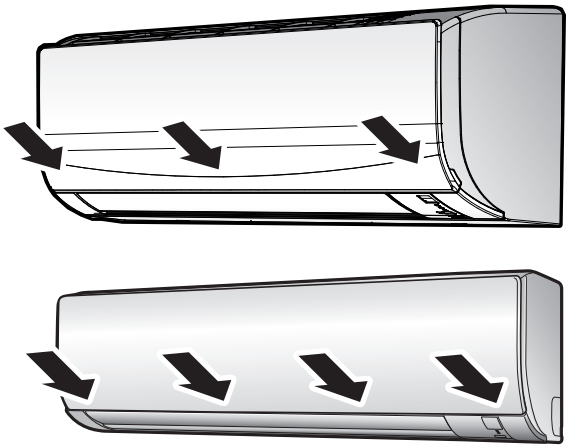

To remove the front panel

1. Open the front panel, see "3.10 Plate work" [▸ 124].
2. Remove the front panel by sliding it to the left or the right and pulling it toward you.

   Result: The front panel shaft on 1 side will be disconnected.
3. Disconnect the front panel shaft on the other side in the same manner.

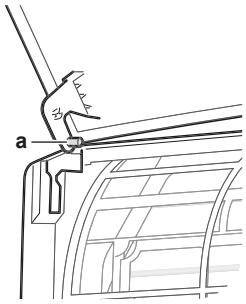

a Front panel shaft

To remove the front grille

> **CAUTION**
> Wear adequate personal protective equipment (protective gloves, safety glasses,...) when installing, maintaining or servicing the system.

1. Remove the front panel to remove the air filter.
2. Remove 2 screws (class 20~42) or 3 screws (class 50~71) from the front grille.
3. Push down the 3 upper hooks marked with a symbol with 3 circles.

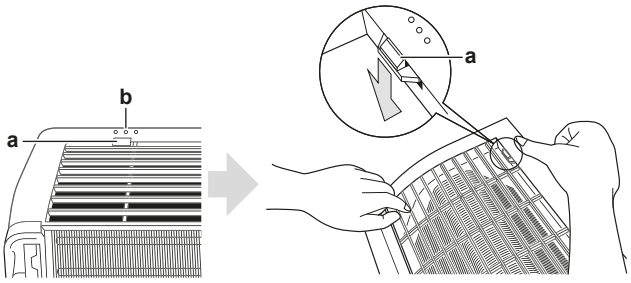

a Upper hook
b Symbol with 3 circles

4 We recommend opening the flap before removing the front grille.

5 Place both hands under the centre of the front grille, push it up and then toward you.

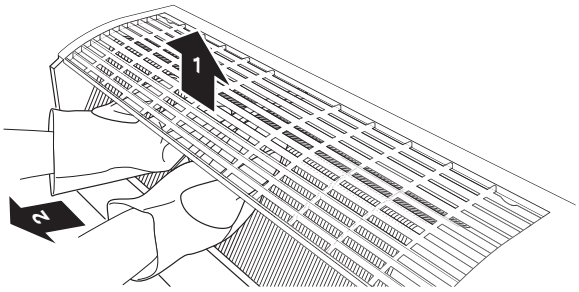

To remove the electrical wiring box cover

TO OPEN THE SERVICE COVER

1 Remove 1 screw from the service cover.

2 Pull out the service cover horizontally away from the unit.

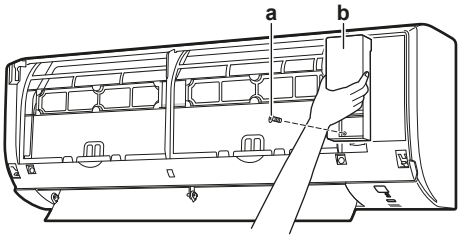

a Service cover screw
b Service cover

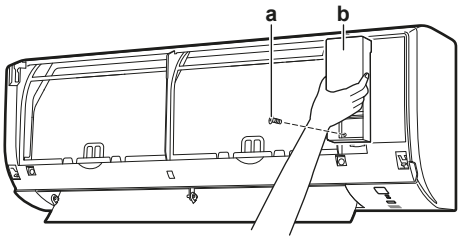

a Service cover screw
b Service cover

> **NOTICE**
>
> When closing the service cover, make sure that the tightening torque does NOT exceed 1.4 (±0.2) N•m.

TO REMOVE THE ELECTRICAL WIRING BOX COVER

Prerequisite: Remove the front grille.

1 Remove 1 screw from the electrical wiring box.

2 Open the electrical wiring box cover by pulling the protruding part on the top of the cover.

3 Unhook the tab(s) on the bottom and remove the electrical wiring box cover.

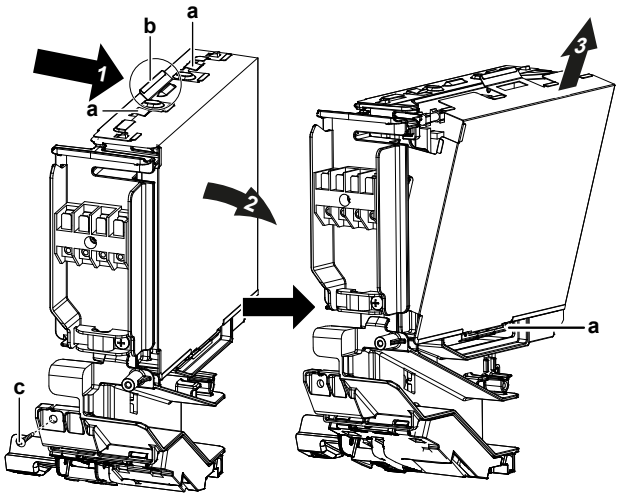

a Tab
b Protruding part on the top of the cover
c Screw

To remove the switch box

Prerequisite: Stop the unit operation via the user interface.

Prerequisite: Turn OFF the respective circuit breaker.

Prerequisite: Remove the required plate work, see "3.10 Plate work" [▶ 124].

1 Disconnect the power supply wiring from the power supply terminal X1M.

2 Remove the screw and power supply wiring bracket.

3 Pull the clip and remove the heat exchanger thermistor from its holder.

4 Remove the screws to disconnect the grounding wires from the heat exchanger.

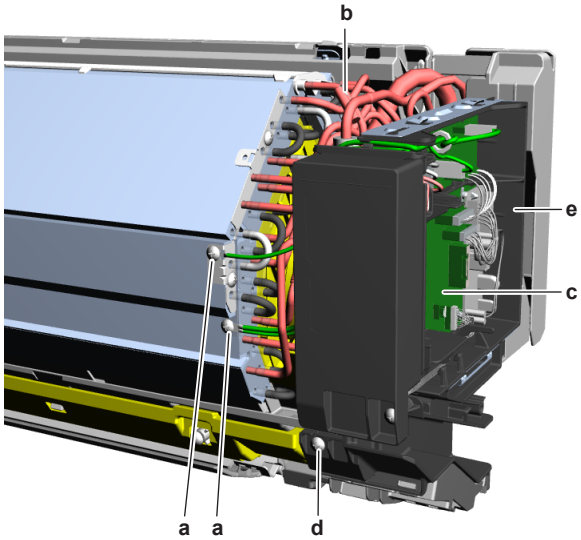

a Grouding wire screw
b Heat exchanger thermistor
c Indoor unit PCB
d Switch box screw
e Switch box

5 Disconnect the connectors of the indoor unit fan motor, the swing flap motor and the swing raster motor (if equipped) from the indoor unit PCB.

6 Remove the screw and remove the switch box from the indoor unit.

7 To install the switch box, see "3.10 Plate work" [▶ 124].

To install the switch box

1 install the switch box in the correct location on the indoor unit.

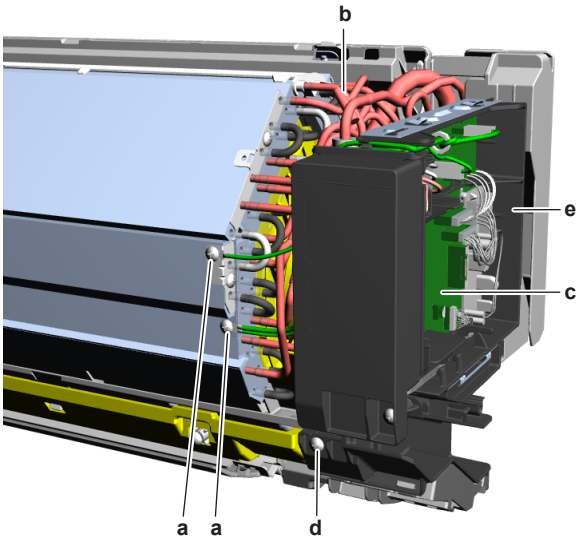

a Grouding wire screw
b Heat exchanger thermistor
c Indoor unit PCB
d Switch box screw
e Switch box

2 Route the connectors of the indoor unit fan motor, swing flap motor and swing raster motor (if equipped) inside the switch box and connect them to the indoor unit PCB.

3 Install and tighten the screw to secure the switch box.

4 Install the heat exchanger thermistor in its holder.

5 Connect the grounding wires to the heat exchanger using the screws.

6 Connect the power supply wiring to the power supply terminal X1M.

7 Install the power supply wiring bracket. Install and tighten the screw.

To re-install the front grille

1 Install the front grille and firmly engage the 3 upper hooks.

2 Install 2 screws (class 20~42) or 3 screws (class 50~71) back on the front grille.

3 Install the air filter and then mount the front panel.

To re-install the front panel

1 Attach the front panel. Align the shafts with the slots and push them all the way in.

2 Close the front panel, see "3.10 Plate work" [▶ 124].

3.11 Reactor

3.11.1 Checking procedures

To perform an electrical check of the reactor

Prerequisite: Stop the unit operation via the user interface.

Prerequisite: Turn OFF the respective circuit breaker.

1 Remove the required plate work, see "3.10 Plate work" [▶ 124].

> **DANGER: RISK OF ELECTROCUTION**
>
> Wait for at least 10 minutes after the circuit breaker has been turned OFF, to be sure the rectifier voltage is below 10 V DC before proceeding.

2 Visually check the reactor for any damage or burnt-out components. If any damage is found, replace the reactor, see "3.11.2 Repair procedures" [▶ 137].

Class 20~42 units

1 Check the connections of the reactor on the main PCB and check continuity of the wires, see "6.2 Wiring diagram" [▶ 169].

2 Remove the Faston connectors from the reactor.

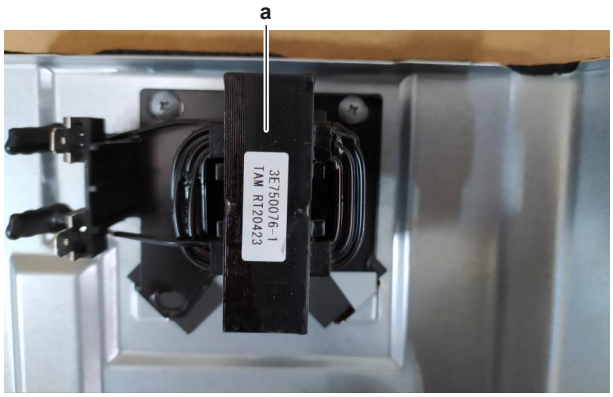

a Reactor

3 Using a megger device of 500 V DC, check the insulation resistance. Make sure there is no earth leakage.

Is the measured insulation resistance correct?	Action
Yes	Continue with the next step.
No	Replace the reactor, see "3.11.2 Repair procedures" [▶ 137].

4 Measure the resistance of the reactor.

Result: The measured resistance MUST be 105.3~128.7 mΩ.

Is the resistance measurement correct?	Action
Yes	Return to the troubleshooting of the specific error and continue with the next step.
No	Replace the reactor, see "3.11.2 Repair procedures" [▶ 137].

Class 50~71 units

1 Check that the reactors are firmly installed on the main PCB.

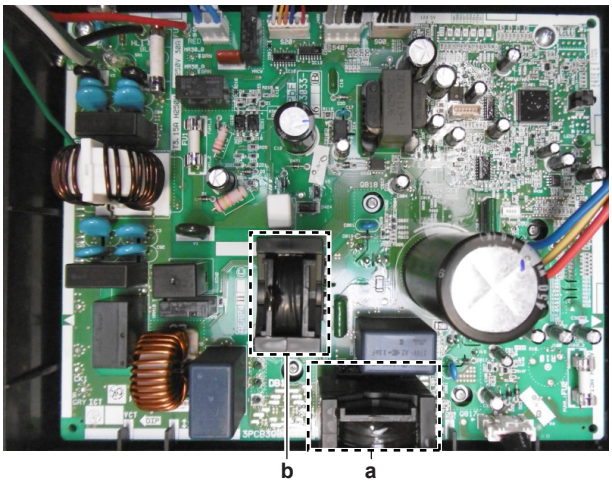

a Reactor L803
b Reactor L804

2 Remove the main PCB, see "Repair procedures" [▶ 111]. The reactor measuring points are ONLY reachable on the back side of the main PCB.

3 Measure the resistance of the reactor using a low ohm multi meter.

Result: The resistance MUST be as follows:

Measuring points	Resistance
c-d	20~30 mΩ
e	152~228 mΩ

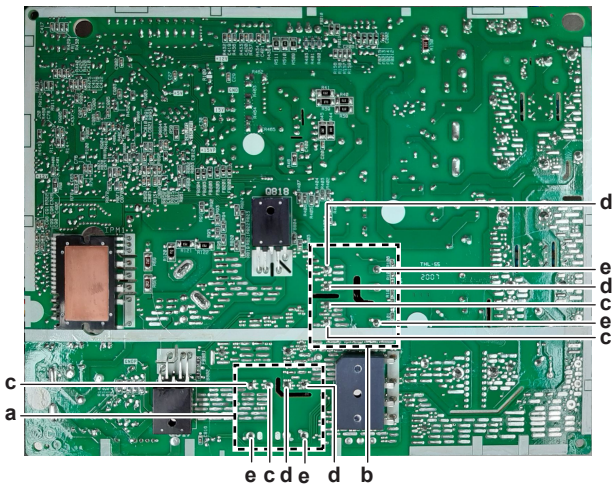

a L803
b L804
c Measuring point
d Measuring point
e Measuring point

Is the resistance measurement correct?	Action
Yes	Proceed with the next step.
No	Replace the reactor, see "3.11.2 Repair procedures" [▶ 137].

4 Measure the inductance of the reactor using an LCR meter.

Result: The inductance MUST be as follows:

Measuring points	Resistance
c-d	88.5~101.5 µH

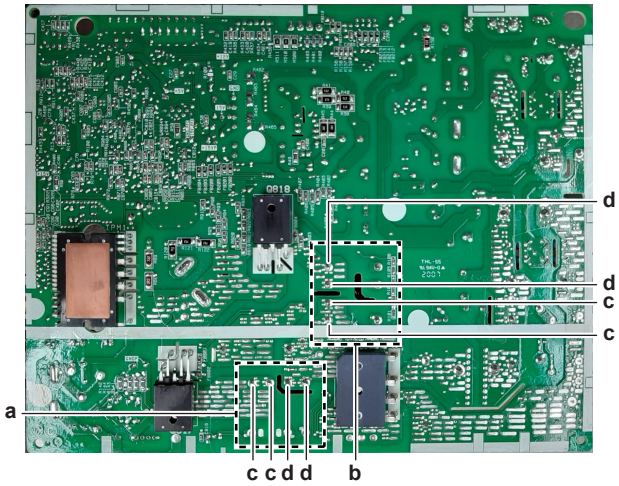

a L803
b L804
c Measuring point
d Measuring point

Is the inductance measurement correct?	Action
Yes	Return to the troubleshooting of the specific error and continue with the next step.
No	Replace the reactor, see "3.11.2 Repair procedures" [▸ 137].

3.11.2 Repair procedures

For class 20~42 units

See procedures below.

For class 50~71 units

As the reactors are part of the main PCB, replace the complete main PCB. See "Repair procedures" [▸ 101].

To remove the reactor

Prerequisite: Stop the unit operation via the user interface.

Prerequisite: Turn OFF the respective circuit breaker.

1 Remove the required plate work, see "3.10 Plate work" [▸ 124].

> **DANGER: RISK OF ELECTROCUTION**
>
> Wait for at least 10 minutes after the circuit breaker has been turned OFF, to be sure the rectifier voltage is below 10 V DC before proceeding.

2 Remove the Faston connectors to disconnect the wires from the reactor.

3 Remove the 2 screws that fix the reactor to the switch box.

4 Remove the reactor.

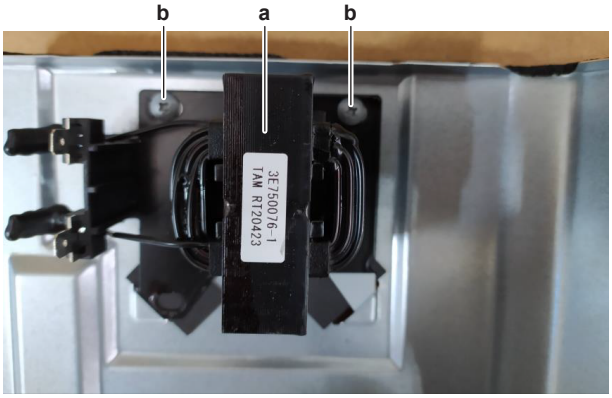

a Reactor
b Screw

5 To install the reactor, see "3.11.2 Repair procedures" [▶ 137].

To install the reactor

1 Install the reactor on the correct location on the switch box.

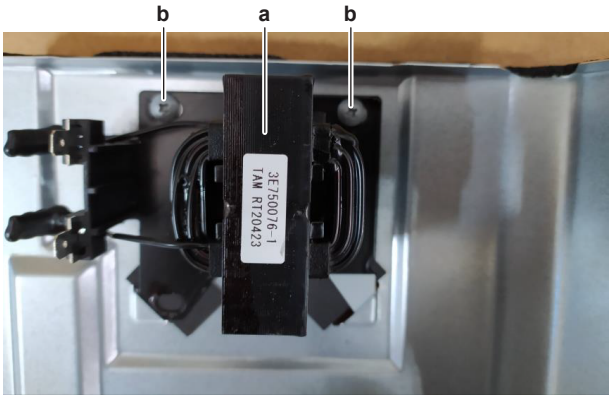

a Reactor
b Screw

2 Install the 2 screws that fix the reactor to the switch box.

3 Connect the Faston connectors to the reactor.

Is the problem solved?	Action
Yes	No further actions required.
No	Return to the troubleshooting of the specific error and continue with the next procedure.

3.12 Swing flap motor

3.12.1 Checking procedures

To perform an electrical check of the swing flap motor

Prerequisite: Stop the unit operation via the user interface.

Prerequisite: Turn OFF the respective circuit breaker.

Prerequisite: Remove the required plate work, see "3.10 Plate work" [▶ 124].

1 Disconnect the swing flap motor connector from the indoor unit main PCB.

2 Measure the resistance between the following pins of the motor connector.

Result: The measurements MUST be as shown in the table below.

Pins	Measured resistance (Ω)
1-2	232.5~267.5
1-3	
1-4	
1-5	
2-3	465~535
2-4	
2-5	
3-4	
3-5	
4-5	

Swing flap motor resistance measurements are correct?	Action
Yes	Return to the troubleshooting of the specific error and continue with the next procedure.
No	Replace the swing flap motor, see "3.12.2 Repair procedures" [▶ 139].

3.12.2 Repair procedures

To remove the swing flap motor

Prerequisite: Stop the unit operation via the user interface.

Prerequisite: Turn OFF the respective circuit breaker.

Prerequisite: Remove the required plate work, see "3.10 Plate work" [▶ 124].

1 Remove both swing flaps from the indoor unit (by clicking it out).

2 Remove the cover.

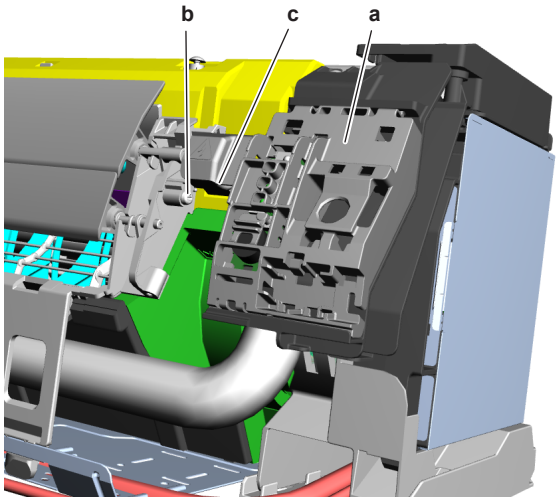

a Cover
b Screw
c Swing flap motor

3 Disconnect the connector from the swing flap motor.

4 Remove the screw from the swing flap motor.

5 Remove the swing flap motor from the coupling piece.

6 To install the swing flap motor, see "3.12.2 Repair procedures" [▸ 139].

To install the swing flap motor

1 Install the swing flap motor in the correct location on the indoor unit. Make sure the swing flap motor shaft is correctly inserted in the coupling piece.

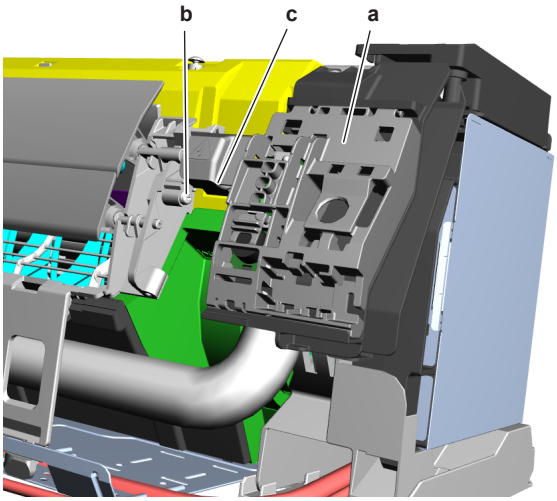

a Cover
b Screw
c Swing flap motor

2 Install and tighten the screw to fix the swing flap motor.

3 Connect the connector to the swing flap motor.

4 Install the cover.

5 Install both swing flaps in the indoor unit (by clicking it on).

Is the problem solved?	Action
Yes	No further actions required.
No	Return to the troubleshooting of the specific error and continue with the next procedure.

3.13 Thermistors

3.13.1 Refrigerant side thermistors

Checking procedures

> **INFORMATION**
> It is recommended to perform the checks in the listed order.

To perform a mechanical check of the specific thermistor

Prerequisite: Stop the unit operation via the user interface.

Prerequisite: Turn OFF the respective circuit breaker.

Prerequisite: Remove the required plate work, see "3.10 Plate work" [▸ 124].

1 Locate the thermistor and remove the insulation if needed. Check that the thermistor is correctly installed and that there is thermal contact between the thermistor and the piping or ambient (for air thermistor).

Is the thermistor correctly installed (thermal contact between the thermistor and the piping)?	Action
Yes	Perform an electrical check of the specific thermistor, see "Checking procedures" [▶ 140].
No	Correctly install the thermistor, see "Repair procedures" [▶ 144].

To perform an electrical check of the specific thermistor

1 First perform a mechanical check of the thermistor, see "Checking procedures" [▶ 140].

2 Locate the thermistor.

> **INFORMATION**
> Remove the thermistor from its holder if not reachable with a contact thermometer.

3 Measure the temperature using a contact thermometer.

Name	Symbol	Location (PCB)	Connector (pins)	Inter-mediate connector (pins)	Referen ce (table)
Air thermistor	R1T	Main (O/U)	S90:1-2	-	A
Heat exchanger thermistor	R2T	Main (O/U)	S90:3-4	-	A
Discharge pipe thermistor	R3T	Main (O/U)	S90:5-6	-	A
Indoor unit air (room) thermistor	R1T	Display PCB on main PCB (I/U)	S26:1-2	S27:1-2 (on display PCB)	B
Heat exchanger thermistor	R2T	Main (I/U)	S32:1-2	-	A

4 Determine the thermistor resistance that matches the measured temperature.

Thermistor – Table A

T °C	kΩ	T °C	kΩ	T °C	kΩ	T °C	kΩ
–20	197.81	10	39.96	40	10.63	70	3.44

T °C	kΩ	T °C	kΩ	T °C	kΩ	T °C	kΩ
–19	186.53	11	38.08	41	10.21	71	3.32
–18	175.97	12	36.30	42	9.81	72	3.21
–17	166.07	13	34.62	43	9.42	73	3.11
–16	156.80	14	33.02	44	9.06	74	3.01
–15	148.10	15	31.50	45	8.71	75	2.91
–14	139.94	16	30.06	46	8.37	76	2.82
–13	132.28	17	28.70	47	8.05	77	2.72
–12	125.09	18	27.41	48	7.75	78	2.64
–11	118.34	19	26.18	49	7.46	79	2.55
–10	111.99	20	25.01	50	7.18	80	2.47
–9	106.03	21	23.91	51	6.91		
–8	100.41	22	22.85	52	6.65		
–7	95.14	23	21.85	53	6.41		
–6	90.17	24	20.90	54	6.65		
–5	85.49	25	20.00	55	6.41		
–4	81.08	26	19.14	56	6.18		
–3	76.93	27	18.32	57	5.95		
–2	73.01	28	17.54	58	5.74		
–1	69.32	29	16.80	59	5.14		
0	65.84	30	16.10	60	4.87		
1	62.54	31	15.43	61	4.70		
2	59.43	32	14.79	62	4.54		
3	56.49	33	14.18	63	4.38		
4	53.71	34	13.59	64	4.23		
5	51.09	35	13.04	65	4.08		
6	48.61	36	12.51	66	3.94		
7	46.26	37	12.01	67	3.81		
8	44.05	38	11.52	68	3.68		
9	41.95	39	11.06	69	3.56		

Thermistor – Table B

T °C	kΩ	T °C	kΩ	T °C	kΩ	T °C	kΩ
–30	200.20	5	25.9	40	5.3	75	1.5
–25	144.32	10	20.2	45	4.3	80	1.3
–20	105.38	15	15.8	50	3.6	85	1.1
–15	77.90	20	12.5	55	3.0	90	0.9
–10	58.25	25	10.0	60	2.5	95	0.8
–5	44.0	30	8.0	65	2.1		
0	33.6	35	6.5	70	1.8		

5 Disconnect the thermistor connector from the appropriate PCB.

6 Measure the resistance between the appropriate pins of the thermistor connector.

7 Check that the measured resistance value matches the resistance determined through the measured temperature (earlier step in the procedure).

- E.g. R1T thermistor:
- Measured temperature with contact thermometer: 23.1°C,
- Resistance value determined through temperature (using the thermistor table A):
  Resistance at 23°C: 21.85 kΩ,
  Resistance at 24°C: 20.90 kΩ,
- Disconnect connector and measure resistance between S90 pin 1-2:
  Measured resistance: 21.80 kΩ,
- Measured resistance value is inside the range. R1T thermistor passes the check.

INFORMATION

All thermistors have a resistance tolerance of 3%.

INFORMATION

In most cases, the user interface allows to monitor the thermistors.

If the measured resistance value matches the resistance determined through the measured temperature, but the temperature for the corresponding thermistor is NOT correct on the user interface display, replace the applicable PCB.

INFORMATION

See the overview of the thermistors at the start of the procedure and the "6.2 Wiring diagram" [▶ 169] to determine if the specific thermistor is either:

- Directly connected to the PCB
- Connected to an intermediate connector which is connected to the PCB

For thermistors directly connected to the PCB

Does the measured resistance of the thermistor match with the temperature determined resistance?	Action
Yes	Thermistor is OK. Return to the troubleshooting of the specific error and continue with the next procedure.
No	Replace the specific thermistor, see "Repair procedures" [▶ 144].

For thermistors connected to an intermediate connector

Does the measured resistance of the thermistor match with the temperature determined resistance?	Action
Yes	Thermistor is OK. Return to the troubleshooting of the specific error and continue with the next procedure.
No	Continue with the next step.

8 Disconnect the thermistor from the intermediate connector and measure the resistance of the thermistor (between the appropriate pins of the connector).

Does the measured resistance of the thermistor match with the temperature determined resistance?	Action
Yes	Correct the wiring between the thermistor connector on the PCB and the intermediate connector, see "6.2 Wiring diagram" [▶ 169].
No	Replace the specific thermistor, see "Repair procedures" [▶ 144].

Repair procedures

To remove the thermistor

Indoor unit air (room) thermistor

As the indoor unit air (room) thermistor is located on the display PCB, remove the display PCB as described in the steps below:

Prerequisite: Stop the unit operation via the user interface.

Prerequisite: Turn OFF the respective circuit breaker.

Prerequisite: Remove the required plate work, see "3.10 Plate work" [▶ 124].

1 Disconnect the connector from the display PCB.

2 Press the latches to unlock and remove the display PCB from the unit.

3 To install the indoor unit air (room) thermistor, see "Repair procedures" [▶ 144].

Other refrigerant side thermistors

Prerequisite: Stop the unit operation via the user interface.

Prerequisite: Turn OFF the respective circuit breaker.

Prerequisite: Remove the required plate work, see "3.10 Plate work" [▶ 124].

1 Locate the thermistor that needs to be removed.

2 Remove the thermistor as follows:

- For outdoor unit air (ambient) thermistor:
  Remove the thermistor from the heat exchanger grille recess.
  Remove the protection tube.
- For refrigerant piping thermistors:
  - Cut the tie straps that fix the insulation and the thermistor wire.
  - Cut and remove the insulation.
  - Pull the clip that fixes the thermistor.
  - Remove the thermistor from the thermistor holder.

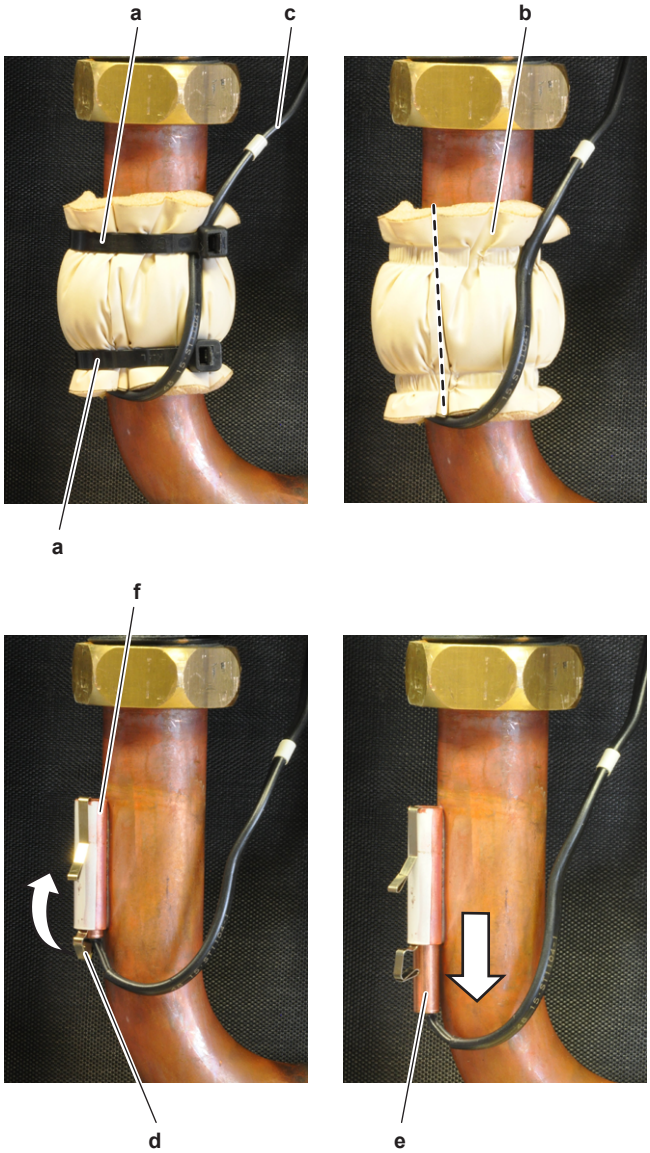

a Tie strap
b Insulation
c Thermistor wire
d Clip
e Thermistor
f Thermistor holder

3 Cut all tie straps that fix the thermistor harness.

4 Disconnect the thermistor connector from the appropriate PCB and remove the thermistor.

> **INFORMATION**
>
> Some of the thermistors are wired to the same connector. See connector and pin information of the thermistors at the start of the electrical check procedure and "6.2 Wiring diagram" [▸ 169]. ALWAYS replace the complete set of thermistors wired to the same connector.

5 When removing the complete set of thermistors wired to the same connector:

- Remove all other thermistors wired to the connector from their thermistor holder,
- Disconnect the thermistor connector,
- Remove the complete set of thermistors.

6 To install the thermistor, see "Repair procedures" [▸ 144].

To install the thermistor

Indoor unit air (room) thermistor

As the indoor unit air (room) thermistor is located on the display PCB, install the display PCB as described in the steps below:

1. Install the display PCB in the correct location on the unit.
2. Connect the connector to the display PCB.

Other refrigerant side thermistors

1. Install the thermistor as follows:
   - For outdoor unit air (ambient) thermistor:
     Insert the thermistor in the protection tube.
     Correctly install the thermistor in the heat exchanger grille recess.
   - For refrigerant piping thermistors:
     Pull the clip and install the thermistor in the specific thermistor holder. Make sure the clip is in the correct position (blocking the thermistor).

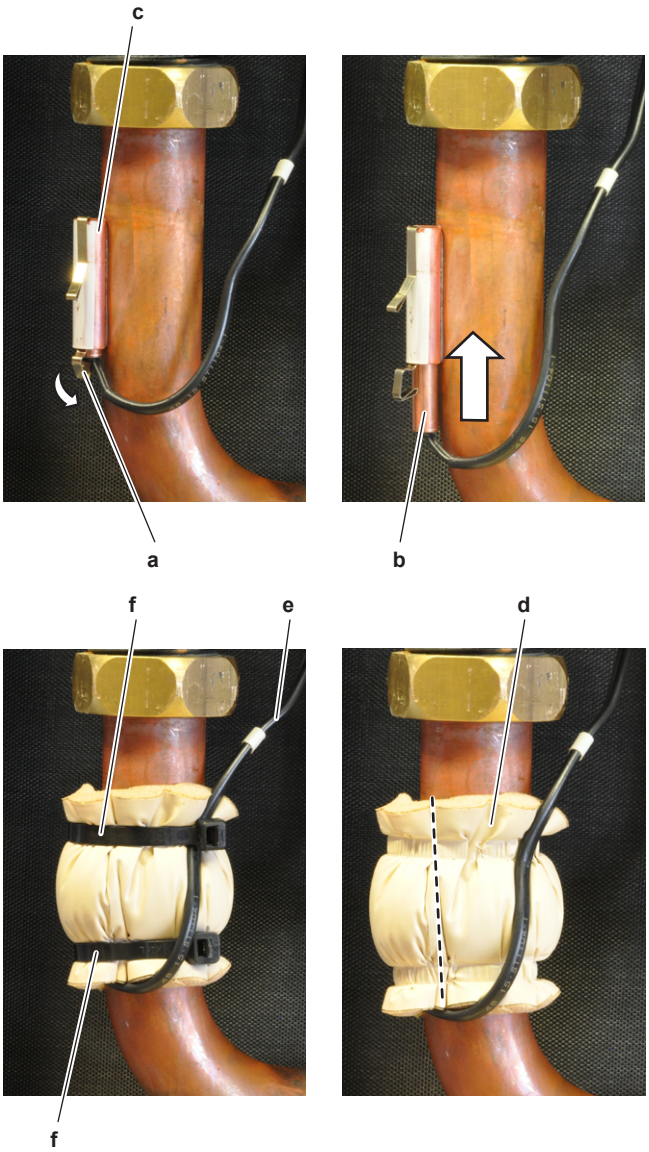

a Clip
b Thermistor
c Thermistor holder
d Insulation
e Thermistor wire

f Tie strap

2 Route the thermistor harness towards the appropriate PCB.

3 Connect the thermistor connector to the appropriate PCB.

INFORMATION

Some of the thermistors are wired to the same connector. See connector and pin information of the thermistors at the start of the electrical check procedure and "6.2 Wiring diagram" [▶ 169]. ALWAYS replace the complete set of thermistors wired to the same connector.

4 When installing the complete set of thermistors wired to the same connector:

- Install all other thermistors wired to the connector in their thermistor holder,
- Route the thermistor harness of all thermistors towards the appropriate PCB or intermediate connector,
- Connect the thermistor connector.

WARNING

When reconnecting a connector to the PCB, make sure to connect it on the correct location and do NOT apply force, as this may damage the connector or connector pins of the PCB.

5 Fix the thermistor harness using new tie straps

6 Install the insulation around the thermistor.

7 Fix the insulation and the thermistor wire using new tie straps.

Is the problem solved?	Action
Yes	No further actions required.
No	Return to the troubleshooting of the specific error and continue with the next procedure.

3.13.2 Other thermistors

Checking procedures

To perform an electrical check of the fin thermistor

Prerequisite: Stop the unit operation via the user interface.

Prerequisite: Turn OFF the respective circuit breaker.

Prerequisite: Remove the required plate work, see "3.10 Plate work" [▶ 124].

1 Locate the thermistor on the appropriate PCB.

2 Measure the temperature using a contact thermometer.

INFORMATION

The thermistors may vary according to the specific unit.

3 Determine the thermistor resistance that matches the measured temperature.

Thermistor – Table A

T °C	kΩ	T °C	kΩ	T °C	kΩ	T °C	kΩ
–20	197.81	10	39.96	40	10.63	70	3.44
–19	186.53	11	38.08	41	10.21	71	3.32
–18	175.97	12	36.30	42	9.81	72	3.21
–17	166.07	13	34.62	43	9.42	73	3.11
–16	156.80	14	33.02	44	9.06	74	3.01
–15	148.10	15	31.50	45	8.71	75	2.91
–14	139.94	16	30.06	46	8.37	76	2.82
–13	132.28	17	28.70	47	8.05	77	2.72
–12	125.09	18	27.41	48	7.75	78	2.64
–11	118.34	19	26.18	49	7.46	79	2.55
–10	111.99	20	25.01	50	7.18	80	2.47
–9	106.03	21	23.91	51	6.91		
–8	100.41	22	22.85	52	6.65		
–7	95.14	23	21.85	53	6.41		
–6	90.17	24	20.90	54	6.65		
–5	85.49	25	20.00	55	6.41		
–4	81.08	26	19.14	56	6.18		
–3	76.93	27	18.32	57	5.95		
–2	73.01	28	17.54	58	5.74		
–1	69.32	29	16.80	59	5.14		
0	65.84	30	16.10	60	4.87		
1	62.54	31	15.43	61	4.70		
2	59.43	32	14.79	62	4.54		
3	56.49	33	14.18	63	4.38		
4	53.71	34	13.59	64	4.23		
5	51.09	35	13.04	65	4.08		
6	48.61	36	12.51	66	3.94		
7	46.26	37	12.01	67	3.81		
8	44.05	38	11.52	68	3.68		
9	41.95	39	11.06	69	3.56		

4 Measure the resistance between the appropriate connection points of the thermistor.

5 Check that the measured resistance value matches the resistance determined through the measured temperature (earlier step in the procedure). E.g:

- Measured temperature with contact thermometer: 23.1°C,
- Resistance value determined through temperature (using the thermistor table A):
  Resistance at 20°C: 24.3 kΩ,
  Resistance at 25°C: 19.4 kΩ,
- Measure resistance between pin 1-2:
  Measured resistance: 21.86 kΩ,
- Measured resistance value is inside the range. Thermistor passes the check.

INFORMATION

All thermistors have a resistance tolerance of 3%.

Does the measured resistance of the thermistor match with the temperature determined resistance?	Action
Yes	Thermistor is OK. Return to the troubleshooting of the specific error and continue with the next procedure.
No	Replace the specific PCB, see "3 Components" [▶ 47].

3.14 Wifi control PCB

ONECTA App adapter BRP069C47 Wifi Control PCB is an optional accessory. The unit does NOT have this PCB by default.

3.14.1 Checking procedures

To perform a power check of the wifi control PCB

Prerequisite: Stop the unit operation via the user interface.

Prerequisite: Turn OFF the respective circuit breaker.

1. Remove the required plate work, see "3.10 Plate work" [▶ 124].
2. Turn ON the power of the unit.
3. Measure the power supply voltage between the pins 4-5 on the wifi control PCB connector.

   Result: The measured voltage MUST be 10~16 V DC.

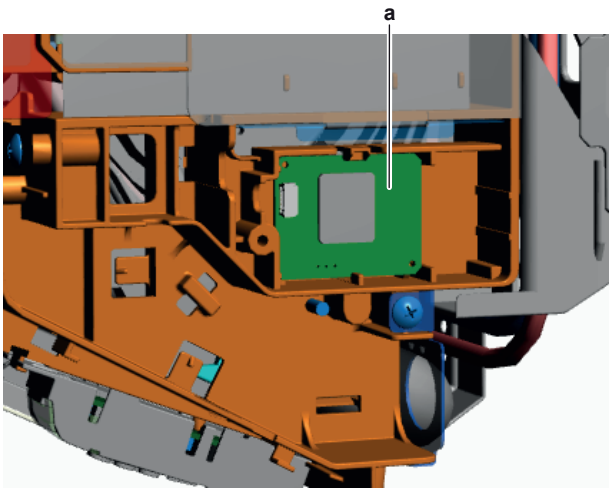

a Wifi control PCB assembly

Is the measured power supply voltage correct?	Action
Yes	Skip the next step..
No	Continue with the next step.

4 Measure the output voltage between between the pins 4-5 on the connector S801 on the indoor unit main PCB.

Result: The measured voltage MUST be 10~16 V DC.

Is the output voltage on the indoor unit main PCB correct?	Action
Yes	Replace the wifi control PCB wiring harness, see "3.14.2 Repair procedures" [▶ 150].
No	Perform a check of the indoor unit main PCB, see "3.7.1 Checking procedures" [▶ 84].

5 As there are no further check procedures for this component, perform a check of the indoor unit main PCB to check if the wifi control PCB needs to be replaced. See "3.7.1 Checking procedures" [▶ 84].

After complete check of the indoor unit main PCB, is the problem solved?	Action
Yes	No further actions required.
No	Replace the wifi control PCB, see "3.14.2 Repair procedures" [▶ 150].

3.14.2 Repair procedures

To remove the wifi control PCB

Prerequisite: Stop the unit operation via the user interface.

Prerequisite: Turn OFF the respective circuit breaker.

Prerequisite: Remove the required plate work, see "3.10 Plate work" [▶ 124].

1 Disconnect the connector from the wifi control PCB.

2 Carefully click the complete wifi control PCB assembly out of the indoor unit.

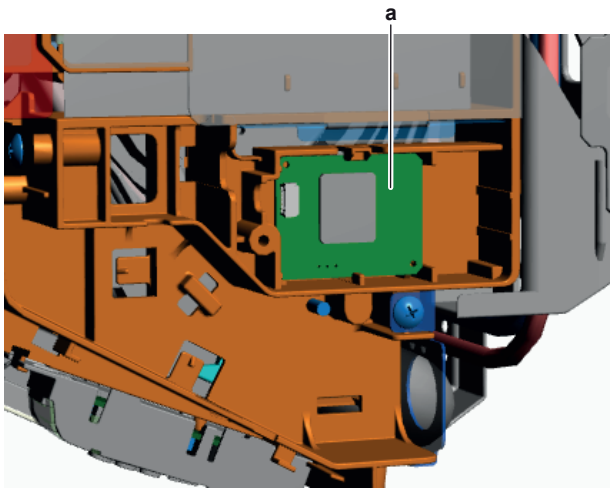

a Wifi control PCB assembly

3 To install the wifi control PCB assembly, see "3.14.2 Repair procedures" [▸ 150].

To install the wifi control PCB

1 Click the wifi control PCB assembly on the indoor unit.

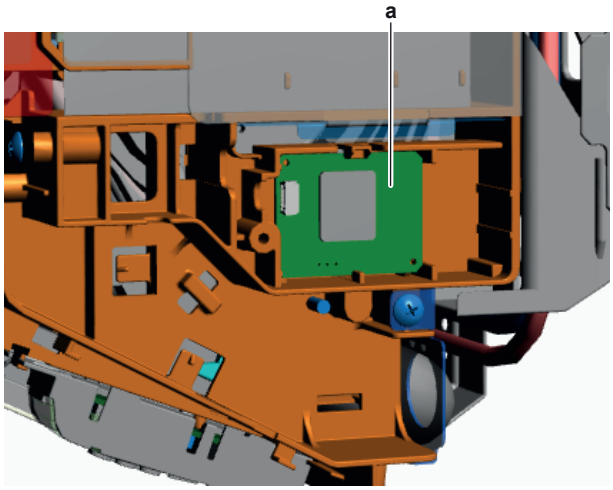

a Wifi control PCB assembly

2 Connect the harness to the wifi control PCB assembly.

Is the problem solved?	Action
Yes	No further actions required.
No	Return to the troubleshooting of the specific error and continue with the next procedure.

To remove the wifi control PCB wiring harness

Prerequisite: Stop the unit operation via the user interface.

Prerequisite: Turn OFF the respective circuit breaker.

Prerequisite: Remove the required plate work, see "3.10 Plate work" [▸ 124].

1 Disconnect the wiring harness from the wifi control PCB.

2 Disconnect the wiring harness connector from the indoor unit main PCB.

3 Cut all tie straps (if any) that fix the wiring harness.

4 Route the wiring harness out of the harness retainers and remove the wifi control PCB wiring harness.

5 To install the wifi control PCB wiring harness, see "3.14.2 Repair procedures" [▶ 150].

To install the wifi control PCB wiring harness

1 Connect the wiring harness connector to the indoor unit main PCB.

> **WARNING**
> When reconnecting a connector to the PCB, make sure to connect it on the correct location and do NOT apply force, as this may damage the connector or connector pins of the PCB.

2 Route the wiring harness through the appropriate harness retainers towards the wifi control PCB.

3 Connect the wiring harness to the wifi control PCB.

4 Fix the wiring harness using new tie straps (if needed).

Is the problem solved?	Action
Yes	No further actions required.
No	Return to the troubleshooting of the specific error and continue with the next procedure.

4 Third party components

4.1 Electrical circuit

4.1.1 Checking procedures

To check the power supply of the unit

Prerequisite: Stop the unit operation via the user interface.

Prerequisite: Turn OFF the respective circuit breaker.

Prerequisite: Remove the required plate work, see "3.10 Plate work" [▶ 124].

1. Check that the power supply cables and earth connection are firmly fixed to the power supply terminal X1M.
2. Measure the insulation resistance between each power supply terminal and the ground using a megger device of 500 V DC. All measurements MUST be >1MΩ. If insulation resistance is <1MΩ, earth leakage is present.
3. Turn ON the power of the unit.
4. Measure the voltage between L and N on the power supply terminal X1M.

   Result: The voltage MUST be 230 V AC ± 10%.
5. Unbalance between the phases MUST NOT exceed 2%.

Is the measured voltage (power supply) correct?	Action
Yes	Return to the troubleshooting of the specific error and continue with the next procedure.
No	Adjust the power supply, see "4.1.2 Repair procedures" [▶ 154].

To check the power supply to the indoor unit

Prerequisite: Stop the unit operation via the user interface.

Prerequisite: Turn OFF the respective circuit breaker.

1. Remove the required plate work, see "3.10 Plate work" [▶ 124].
2. Check that the power supply cables and earth connection are firmly fixed to the indoor unit power supply terminal X1M.
3. Measure the insulation resistance between each power supply terminal and the ground using a megger device of 500 V DC. All measurements MUST be >1MΩ. If insulation resistance is <1MΩ, earth leakage is present.
4. Turn ON the power using the respective circuit breaker.
5. Measure the voltage between L and N on the indoor unit power supply terminal X1M.

   Result: The voltage MUST be 230 V AC ± 10%.

Is the measured voltage (power supply) correct?	Action
Yes	Return to the troubleshooting of the specific error and continue with the next procedure.

Is the measured voltage (power supply) correct?	Action
No	Continue with the next step.

6 Check the power supply to the unit, see "4.1.1 Checking procedures" [▶ 153].

Does the unit receive power?	Action
Yes	Correct the wiring from the main power supply terminal to the indoor unit power supply terminal, see "4.1.2 Repair procedures" [▶ 154].
No	Adjust the power supply to the unit, see "4.1.2 Repair procedures" [▶ 154].

To check the wiring between the outdoor unit and the indoor unit

1 Check that all wires are properly connected and that all connectors are fully plugged-in.

2 Check that no connectors or wires are damaged.

3 Check that the wiring corresponds with the wiring diagram, see "6.2 Wiring diagram" [▶ 169].

INFORMATION

Correct the wiring as needed.

Is the problem solved?	Action
Yes	No further actions required.
No	Return to the troubleshooting of the specific error and continue with the next procedure.

4.1.2 Repair procedures

To adjust the power supply

1 Make sure that the power source is in line with the requirements described in the databook.

2 Adjust the power supply within 50 Hz ± 3%.

Is the problem solved?	Action
Yes	No further actions required.
No	Return to the troubleshooting of the specific error and continue with the next procedure.

To correct the wiring from the main power supply terminal to the indoor unit power supply terminal

Prerequisite: Stop the unit operation via the user interface.

Prerequisite: Turn OFF the respective circuit breaker.

Prerequisite: Remove the required plate work, see "3.10 Plate work" [▶ 124].

1 Make sure that all wires are firmly and correctly connected, see "6.2 Wiring diagram" [▶ 169].

2 Check the continuity of all wires.

3 Replace any damaged or broken wires.

> **INFORMATION**
> If applicable, also check the electrical components between the main power supply terminal and the indoor unit power supply terminal (e.g. intermediate terminal, noise filter, fuse, ...).

Is the problem solved?	Action
Yes	No further actions required.
No	Return to the troubleshooting of the specific error and continue with the next procedure.

4.2 Refrigerant circuit

4.2.1 Checking procedures

> **INFORMATION**
> It is recommended to perform the checks in the listed order.

To check if the stop valves are open

Prerequisite: Remove the required plate work, see "3.10 Plate work" [▶ 124].

1 Remove the caps.

a Liquid stop valve
b Gas stop valve

2 Check if the stop valves are completely open.

The refrigerant circuit stop valves are open?	Action
Yes	Return to the troubleshooting of the specific error and continue with the next procedure.

The refrigerant circuit stop valves are open?	Action
No	Open the stop valves of the refrigerant circuit, see "4.2.2 Repair procedures" [▶ 159].

To check if the refrigerant circuit is clogged

Prerequisite: Stop the unit operation via the user interface.

Prerequisite: Turn OFF the respective circuit breaker.

1. Wait for the refrigerant to reach the outdoor temperature.
2. Check that all field piping is done according to the refrigeration practice and installation manual:
   - Correct piping diameters
   - Piping distance limits are followed
   - NO pipes are squeezed
   - NO short radius bends
3. Connect a manometer to the service port.
4. Turn ON the power of the unit.
5. Activate `Heating` operation via the user interface.
6. Read the pressure on the pressure gauge. If, at the start of the unit operation, the pressure is high or very low, the refrigerant circuit might be clogged.
7. On the refrigerant liquid piping (between the indoor unit heat exchanger and the outdoor unit heat exchanger (coil)), using a contact thermometer, measure the temperature before and after every restricting device. If a big temperature difference is measured (>2.5~4K), an internal pipe obstruction may be present at this location.

INFORMATION

Focus on positions with a potential risk for clogging such as:

- Filters
- Valves
- Brazing points
- ...

INFORMATION

A bigger temperature drop before and after the expansion valve can be normal, however excessive ice is indicating a malfunction of the expansion valve or internal obstruction of the valve (dirt or ice build up in case of humidity in the system).

Temperature drop found?	Action
Yes	Replace the clogged part, see "4.2.2 Repair procedures" [▶ 159].
No	Return to the troubleshooting of the specific error and continue with the next procedure.

To check if the refrigerant circuit is correctly charged

Due to the relationship to pressure control and electronic expansion valve control, the amount of refrigerant needs to be examined according to operating conditions.

Refer to the procedures shown below for correct examination.

Refrigerant overcharge diagnosis

1. High pressure rises. Consequently, overload control is conducted to cause insufficient cooling capacity.
2. The superheated degree of suction gas lowers (or the wet operation is performed). Consequently, the compressor consumes more power and is noisy (before over-current relay trips).
3. The subcooling degree of refrigerant in liquid form rises (values >4~5K are NOT normal).

Cooling

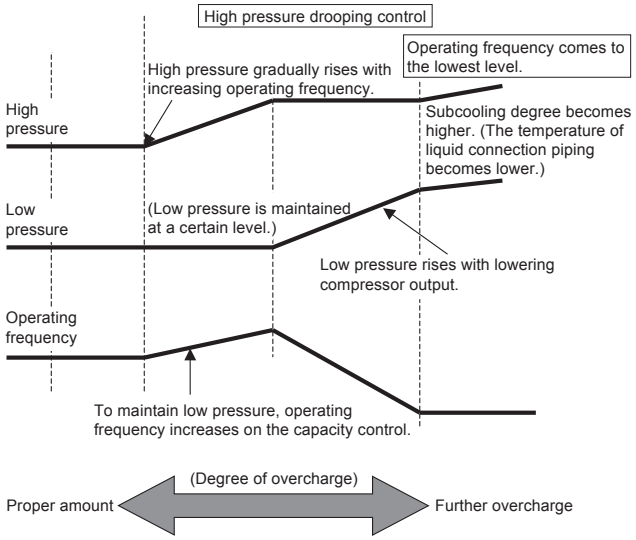

Heating

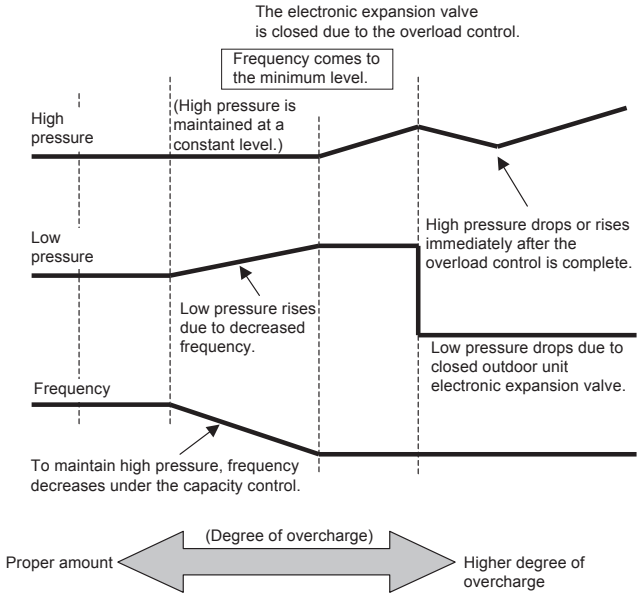

Refrigerant shortage diagnosis

1. The superheated degree of suction gas rises. Consequently, the compressor discharge gas temperature becomes higher than normal.
2. The superheated degree of suction gas rises. Consequently, the electronic expansion valve turns open more than normal or completely open for average output.

3 Low pressure drops to cause the unit not to reach cooling capacity (or heating capacity).

Cooling

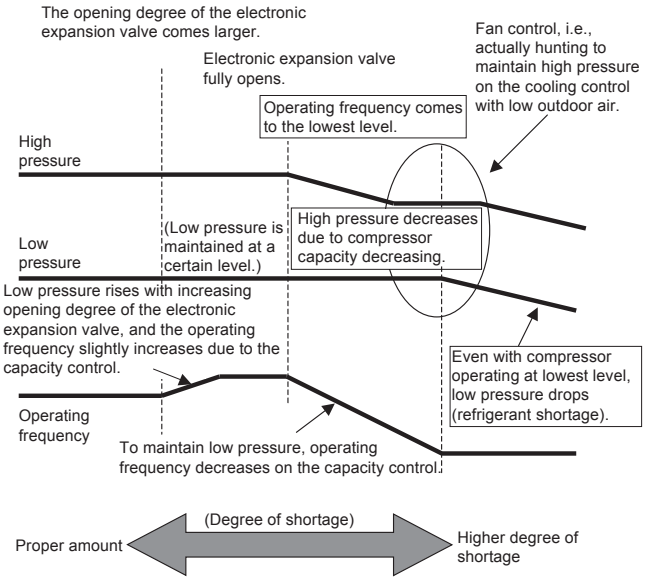

Heating

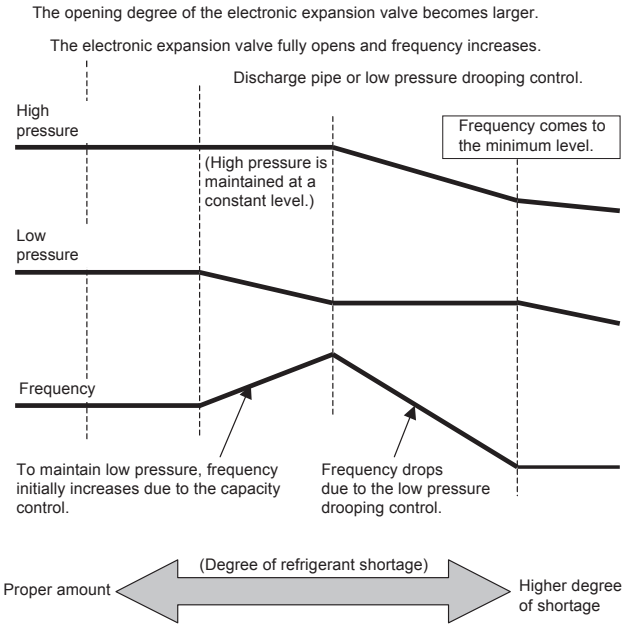

Is the refrigerant circuit charged correctly?	Action
Yes	Return to the troubleshooting of the specific error and continue with the next procedure.
No	Add or recuperate refrigerant until correctly charged, see "4.2.2 Repair procedures" [▶ 159].

To check for non-condensables in the refrigerant circuit

Prerequisite: Stop the unit operation via the user interface.

Prerequisite: Turn OFF the respective circuit breaker.

1 Wait for the refrigerant to reach the outdoor temperature.

2 Connect a manometer to the service port.

3 Measure the pressure of the refrigerant. The measured pressure converted into saturated temperature MUST be in line with the expected pressure / saturated temperature at current ambient temperature.

4 If the measured pressure is significantly higher (>5K), non-condensables gasses are most likely present in the refrigerant.

Any non-condensables found in the refrigerant circuit?	Action
Yes	To replace the refrigerant, see "4.2.2 Repair procedures" [▶ 159].
No	Return to the troubleshooting of the specific error and continue with the next procedure.

To perform a pressure test of the refrigerant circuit

1 Perform a pressure test in line with local legislation.

Is the pressure in the refrigerant circuit correct?	Action
Yes	Return to the troubleshooting of the specific error and continue with the next procedure.
No	Replace the leaking part of the refrigerant circuit, see "4.2.2 Repair procedures" [▶ 159].

4.2.2 Repair procedures

To open the stop valves of the refrigerant circuit

Prerequisite: Remove the required plate work, see "3.10 Plate work" [▶ 124].

1 Remove the caps.

a Liquid stop valve
b Gas stop valve

2 Completely open the stop valves by screwing the stop valve screw counterclockwise.

Is the problem solved?	Action
Yes	No further actions required.
No	Return to the troubleshooting of the specific error and continue with the next procedure.

To replace the clogged/leaking part of the refrigerant circuit

1 See the correct procedure for the component that needs to be repaired. See also "Repair information" [▶ 161] for more details.

Is the problem solved?	Action
Yes	No further actions required.
No	Return to the troubleshooting of the specific error and continue with the next procedure.

To recuperate the refrigerant

Prerequisite: Stop the unit operation via the user interface.

1 Manually open all expansion valves.

2 Connect the vacuum pump, manifold, recovery unit, and refrigerant bottle to the service port of the refrigerant circuit as shown below.

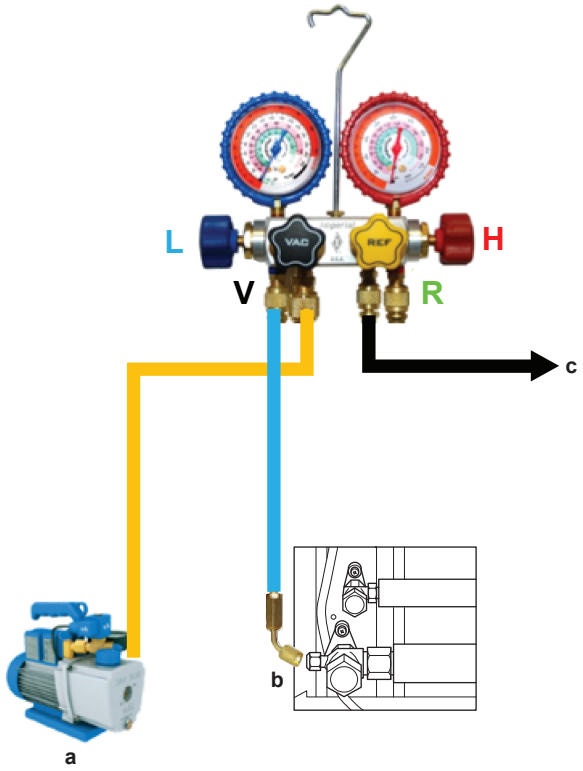

a Vacuum pump
b Connect flexible hose to service port
c To recovery pump
L Low pressure
H High pressure
V Vacuum
R Refrigerant

3 To add refrigerant, see "4.2.2 Repair procedures" [▶ 159].

Is the problem solved?	Action
Yes	No further actions required.
No	Return to the troubleshooting of the specific error and continue with the next procedure.

To add refrigerant

1 See the installer reference guide for the correct procedure.

Is the problem solved?	Action
Yes	No further actions required.
No	Return to troubleshooting of the specific error and continue with the next procedure.

Repair information

Refrigerant piping handling

- Make sure that the applied pressure is never higher than the unit design pressure indicated on the nameplate (PS).
- Work according to the F-gas regulation and/or local regulations.
- Make sure the correct amount of refrigerant is charged after repair according to the F-gas regulation label on the unit (factory + additional where required).
- Make sure to use the appropriate equipment and tools according to the refrigerant and unit type.
- R32 can be charged in gas phase.
- Make sure to use a digital scale (no charging cylinder).
- Execute correct vacuum drying procedure after repair:
  - When using an electronic vacuum gauge with an absolute pressure readout, a pressure of minimal 2000 micron / 2 Torr / 266 Pa MUST be reached. This pressure should stay stable for 30 minutes when vacuum pump is NOT running. If vacuum pressure CANNOT be held, most likely there is still moisture in the system. Again run the vacuum pump for 1~2 hours to a pressure (absolute pressure readout) lower than 2000 micron / 2 torr / 266 Pa. If target pressure CANNOT be reached, again check for leaks.
  - Connect the unit according to the available service ports.
  - Use related field setting where necessary to open expansion valve / solenoid valve.

To perform refrigerant pump down operation

The unit is equipped with an automatic pump down operation which will collect all refrigerant from the field piping and indoor unit in the outdoor unit. To protect the environment, make sure to perform the following pump down operation when relocating the unit.

DANGER: RISK OF EXPLOSION

Pump down – Refrigerant leakage. If you want to pump down the system, and there is a leak in the refrigerant circuit:

- Do NOT use the unit's automatic pump down function, with which you can collect all refrigerant from the system into the outdoor unit. **Possible consequence:** Self-combustion and explosion of the compressor because of air going into the operating compressor.
- Use a separate recovery system so that the unit's compressor does NOT have to operate.

CAUTION

Some outdoor units are equipped with a low pressure switch to protect the compressor by switching it off. NEVER short-circuit the low pressure switch during pump down operation.

1. Remove the refrigerant connection cover, see "3.10 Plate work" [▶ 124].
2. Remove the cap from the stop valves.
3. Perform pump down operation, see installer reference guide for the correct procedure.
4. After 5~10 minutes (after only 1~2 minutes in case temperature <–10°C), close the liquid stop valve using a hexagonal wrench.
5. Check the manifold if vacuum is reached. Close the gas stop valve and stop forced cooling operation.

Refrigerant piping repair

- Make sure to cover open pipe ends during repair so no dust or moisture can enter.
- Make sure to re-apply insulation removed during repair.
- Pipe expansion / flare making:
  - Remove any burrs on the cut surface using the correct tool such as reamer or scraper (note that excessive deburring can thin the pipe walls and cause cracking of the pipe).
  - Make sure the flare has the correct size (use a flare gauge).
  - Make sure no particles remain in the piping.
  - Apply just a drop of refrigerant oil on the inner surface of the flare.
  - Make sure the flare connection is tightened with the correct torque (torque values refer to installation manual).
- Brazing:
  - Use the correct brazing tool.
  - Use a phosphor copper filler metal (silver composition of 0 to 2%). Do not use flux material.
  - Flush the piping before brazing with nitrogen to avoid oxidation of the inside of the copper tubes (nitrogen purity ≥99.99%).

Refrigerant circuit vacuuming - general advice

The effectiveness of the vacuum drying depends on many factors. Besides following the correct procedures and using equipment that is well maintained, the ambient conditions at which the vacuum is done MUST be considered. If there is moisture in the refrigerant and the ambient temperature is lower, the vacuum pressure that MUST be reached to allow the evaporation of the moisture will need

to be lower. In some cases the vacuum pump may NOT be able to achieve these pressures. If possible, heat the locations where moisture is expected.

As a general target, the values below CAN be used as reference to achieve a proper vacuum on the unit:

- Absolute pressure below 270 Pa MUST be reached. The time needed for the pressure to lower is also depending on the moisture amount. If it takes very long or it is hard to reach the pressure, this MIGHT be an indication of moisture presence, so the vacuum pump will need to run longer.
- After stopping the vacuum pump, the absolute pressure MUST be kept below 270 Pa for at least 30 minutes, without a significant increase of pressure. If pressure increases significantly, this is an indication of the presence of moisture in the system.
- If multiple vacuum cycles need to be performed, break the vacuum between the cycles using dry nitrogen.

Depending on the site conditions, as mentioned above, lower pressure values MIGHT be needed to allow the boiling of the moisture in the system. The table below shows the boiling point of water for different absolute pressures.

Pressure (absolute)		Boiling point
Micron / Torr	**Mbar / Pa**	**°C**
760000 / 760	1013 / 101325	100
50000 / 50	66 / 6666	38
10000 / 10	13 / 1333	11
2000 / 2	2.6 / 266	−10
1000 / 1	1.33 / 133	−18
500 / 0.5	0.66 / 66	−24

4.3 External factors

4.3.1 Checking procedures

To check the outdoor temperature

1 The temperature ranges for the different operation modes of the unit can be found in the databook on Business Portal.

INFORMATION

If the outdoor temperature is outside the range of operation, the unit may NOT operate or may NOT deliver the required capacity.

Is the outdoor temperature within the operating range?	Action
Yes	Return to the troubleshooting of the specific error and continue with the next procedure.
No	Wait for the outdoor temperature to return within the operating range.

To check for objects that may block the airflow

1 Check for the presence of object(s) near the indoor unit that may block the airflow. Remove the object(s) as needed.

Is the problem solved?	Action
Yes	No further actions required.
No	Return to the troubleshooting of the specific error and continue with the next procedure.

5 Maintenance

NOTICE

General maintenance/inspection checklist. Next to the maintenance instructions in this chapter, a general maintenance/inspection checklist is also available on the Daikin Business Portal (authentication required).

The general maintenance/inspection checklist is complementary to the instructions in this chapter and can be used as a guideline and reporting template during maintenance.

5.1 To clean the outdoor unit heat exchanger

1. Straighten the hair fins.
2. Clear the outdoor unit heat exchanger from dust, leaves,... using a fin-comb or compressed air/N_2.

CAUTION

Avoid bending or damaging the hair fins of the outdoor unit heat exchanger during the cleaning process.

Do NOT use a high-pressure washer.

Is the problem solved?	Action
Yes	No further actions required.
No	Return to the troubleshooting of the specific error and continue with the next procedure.

5.2 To clean the indoor unit heat exchanger

1. Straighten the hair fins.
2. Clear the indoor unit heat exchanger from dust, ... using a fin-comb or compressed air/N_2.

CAUTION

Avoid bending or damaging the hair fins of the indoor unit heat exchanger during the cleaning process.

Is the problem solved?	Action
Yes	No further actions required.
No	Return to the troubleshooting of the specific error and continue with the next procedure.

5.3 To clean the indoor unit heat exchanger in extreme condition

When cleaning the indoor unit heat exchanger (contaminated by cooking oil, ...), make sure to:

- Use proper field supply cleaning agent which is suitable for cleaning heat exchangers and drain pans.
- Clearly follow the instructions of local supply cleaning agent and to NOT use household cleaning agents.
- Rinse the heat exchanger and drain pan with water after the cleaning process.

CAUTION

Rinse out the cleaning agent until there is NO cleaning agent left. Otherwise, the corrosion of heat exchanger and drain pan may occur. Pay attention to the cleaning agent that may also corrode other materials of the indoor unit (Aluminium, copper, plastic, ABS, ...).

Is the problem solved?	Action
Yes	No further actions required.
No	Return to the troubleshooting of the specific error and continue with the next procedure.

5.4 To clean the air filters

1 Push the tab at the centre of each air filter, then pull it down.

2 Pull out the air filters.

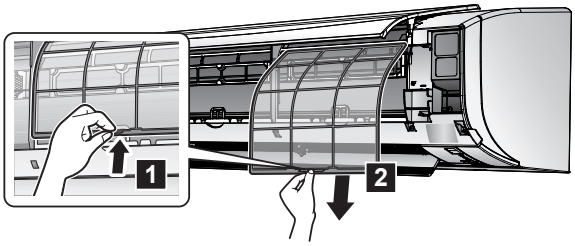

3 Wash the air filters with water or clean them with a vacuum cleaner.

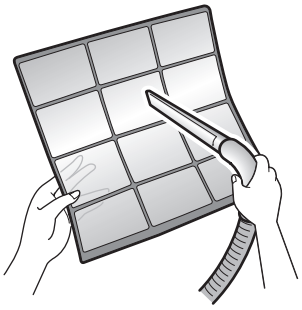

4 Soak in lukewarm water for about 10 to 15 minutes.

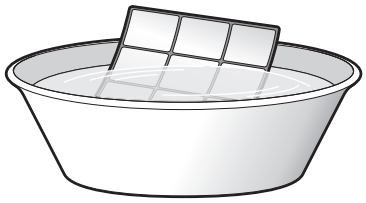

INFORMATION

- If the dust does NOT come off easily, wash them with a neutral detergent diluted in lukewarm water. Dry the air filters in the shade.
- It is recommended to clean the air filters every 2 weeks.

Is the problem solved?	Action
Yes	No further actions required.
No	Return to the troubleshooting of the specific error and continue with the next procedure.

6 Technical data

6.1 Detailed information setting mode

6.1.1 Detailed information setting mode: Indoor unit

See the installer reference guide on business portal for more information.

6.1.2 Detailed information setting mode: Outdoor unit

See the installer reference guide on business portal for more information.

6.1.3 Detailed information setting mode: Remote controller

See the installer reference guide on business portal for more information.

6.2 Wiring diagram

6.2.1 Wiring diagram: Indoor unit

The correct wiring diagram is delivered with the unit.

FTXF20~35A + FTXF20+25B + FTXF20~42C + FTXF20~42D + ATXF20~35A + ATXF20~42C + ATXF20~42D

(1) Wiring diagram

English	Translation
Wiring diagram	Wiring diagram
Indoor	Indoor
Outdoor	Outdoor
Transmission circuit	Transmission circuit
Signal receiver	Signal receiver
Wireless remote control	Wireless remote control
Horizontal	Horizontal
Vertical	Vertical

(2) Notes

English	Translation
⊸	Connection
X1M	Main terminal
- - - - - - -	Field supply
▭	PCB
⏚	Protective earth
Ⓐ	Rectifier
▬▬▬	Field wire

NOTES:

BLK : Black

BLU : Blue

BRN : Brown

GRN : Green

ORG : Orange

PNK : Pink

RED : Red

WHT : White

YLW : Yellow

Caution

When the main power is turned off and then back on again, operation will resume automatically.

(3) Legend

BZ	Buzzer
FG	Frame ground
FU1	Fuse
H*	Harness
IPM*	Intelligent power module
LED 1, LED 2	Light-emitting diode
M1F	Fan motor
M*S	Swing flap motor
MR*	Magnetic relay
PCB1, PCB2, PCB3	Printed circuit board
R1T	Room thermistor
R2T	Suction pipe thermistor
S6-S602	Connector
S1W	Operation switch
V2	Varistor
X1M	Terminal strip
Z*C	Ferrite core

Wiring diagram

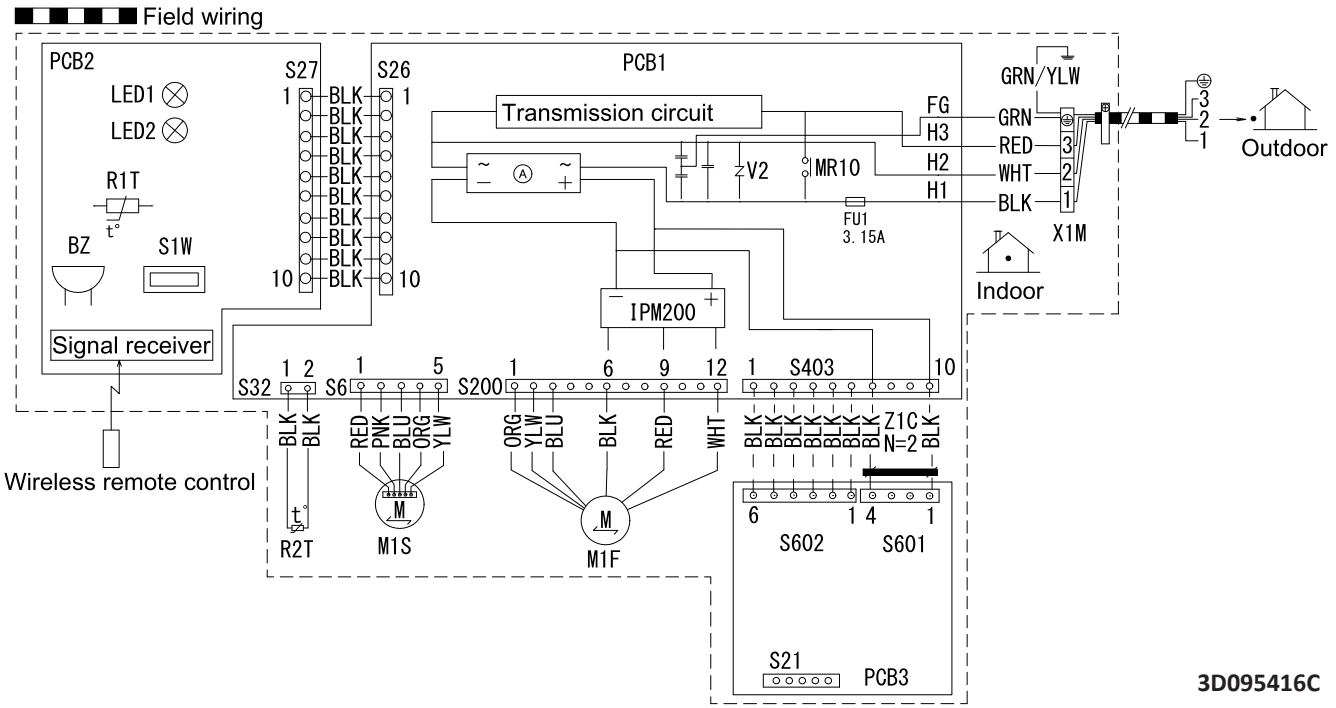

FTXF50~71A + ATXF50~71A

(1) Wiring diagram

English	Translation
Wiring diagram	Wiring diagram
Indoor	Indoor
Outdoor	Outdoor
Transmission circuit	Transmission circuit
Wireless remote control	Wireless remote control
Horizontal	Horizontal
Vertical	Vertical

(2) Notes

English	Translation
⊣	Connection
X1M	Main terminal
- - - - - - -	Field supply
▭	PCB
⏚	Protective earth
▬▬▬	Field wire

NOTES:

BLK : Black

RED : Red

BLU : Blue

WHT : White

GRN : Green

YLW : Yellow

ORG : Orange

Caution

When the main power is turned off and then back on again, operation will resume automatically.

(3) Legend

FG, HE, S6~S900	Connector
F1U (FU1)	Fuse
T1R (L301)	Transformer
M1F	Fan motor
M*S	Swing flap motor
K1R (MR10)	Magnetic relay
A*P	Printed circuit board

R1T, R2T	Thermistor
BS1 (S1W)	Operation switch
R2V (V2)	Varistor
X1M	Terminal strip
Z*C	Ferrite core
IPM*	Intelligent power module
H*P (LED*)	Pilot lamp
V1R (DB301)	Diode bridge
H1O (BZ)	Buzzer
C*	Capacitor
SR (WLU)	Signal receiver

Wiring diagram

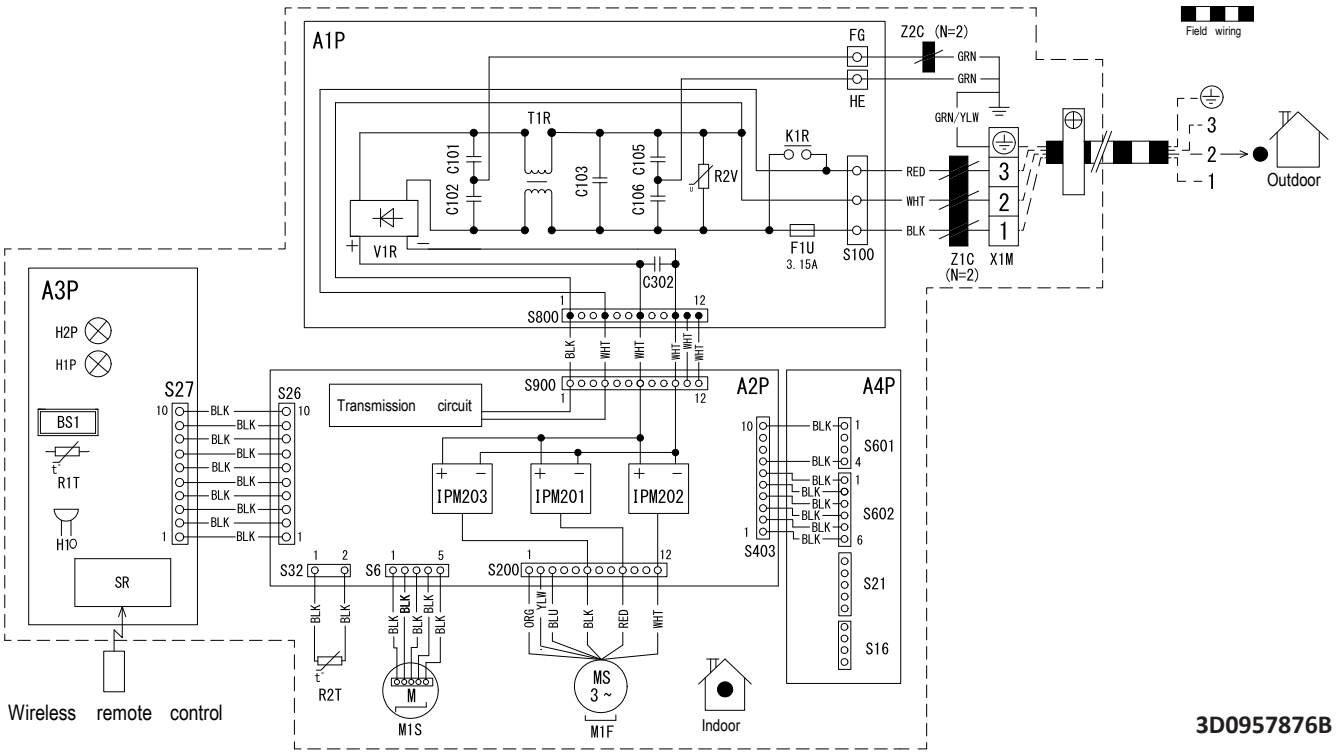

ATXF20~42E + FTXF20~42E

(1) Wiring diagram

English	Translation
Wiring diagram	Wiring diagram
Indoor	Indoor
Outdoor	Outdoor
Transmission circuit	Transmission circuit
Signal receiver	Signal receiver
Wireless remote control	Wireless remote control
Horizontal	Horizontal
Shield plate	Shield plate

(2) Notes

English	Translation
⊸	Connection
X1M	Main terminal
- - - - - - -	Field supply
▭	PCB
⏚	Protective earth
Ⓐ	Rectifier
▬▬▬	Field wire

NOTES:

BLK : Black

BLU : Blue

BRN : Brown

GRN : Green

ORG : Orange

PNK : Pink

RED : Red

WHT : White

YLW : Yellow

Caution

When the main power is turned off and then back on again, operation will resume automatically.

(3) Legend

A*P	Printed circuit board
BZ	Buzzer
FG	Frame ground
FU1	Fuse
IPM*	Intelligent power module
LED 1, LED 2	Light-emitting diode
M1F	Fan motor
M*S	Swing flap motor
MR*	Magnetic relay
R1T	Room thermistor
R2T	Suction pipe thermistor
S1~S800	Connector
S1W	Operation switch
V1	Varistor
X1M	Terminal strip
Z*C	Ferrite core

Wiring diagram

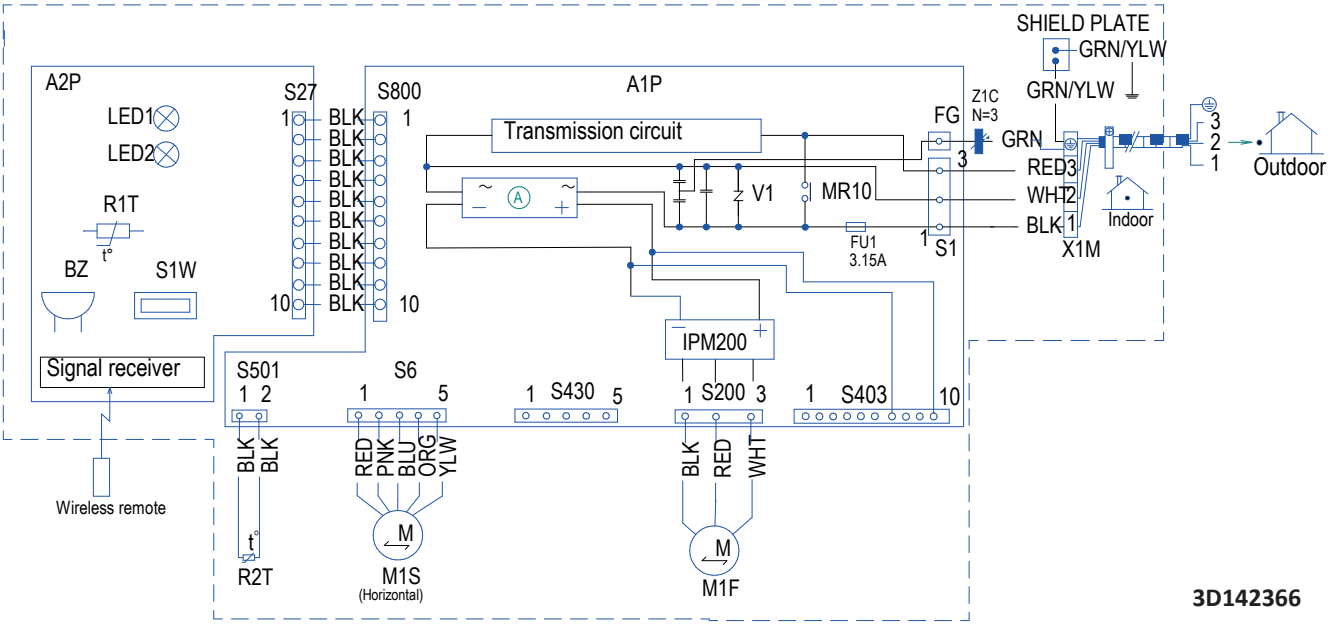

6.2.2 Wiring diagram: Outdoor unit

See the internal wiring diagram supplied with the unit (on the inside of the top plate). The abbreviations used are listed below.

RXF20~35A + RXF20+25B + RXF20~42C + RXF42D + ARXF20~35A + ARXF20~42C + ARXF42D

(1) Wiring diagram

English	Translation
Wiring diagram	Wiring diagram
Indoor	Indoor
Outdoor	Outdoor
Condenser	Condenser
Discharge	Discharge

(2) Notes

English	Translation
Note:	Note
⊕	Connection
X1M	Main terminal
- - - - - - -	Field supply
▭	PCB
⏚	Protective earth
⏚	Earth
▬▬▬	Field wire

NOTES:

BLK : Black

WHT : White

BRN : Brown

RED : Red

GRN : Green

YLW : Yellow

ORG : Orange

BLU : Blue

1 Refer to the nameplate for the power requirements.

(3) Legend

C*	Capacitor
D401, D402	Diode
DB1	Diode bridge
E1, E2, HL1, HN1, S, HR1, HR2	Connection

FU2, FU3	Fuse
IPM*	Intelligent power module
K30R, K10R, MR4	Magnetic relay
L1R	Reactor
M1C	Compressor motor
M1F	Fan motor
A1P	Printed circuit board
PS	Switching power supply
Q1L	Overload protector
R1T	Thermistor (air)
R2T	Thermistor (heat exchanger)
R3T	Thermistor (discharge)
SA*	Surge arrestor
S1PH	High pressure switch
S20-S90	Connector
V2, V3	Varistor
X1M	Terminal strip
Y1S	Reversing solenoid valve coil
PTC1	Thermistor
Y1E	Electronic expansion valve
Z*C	Noise filter (ferrite core)
Z*F	Noise filter

Wiring diagram

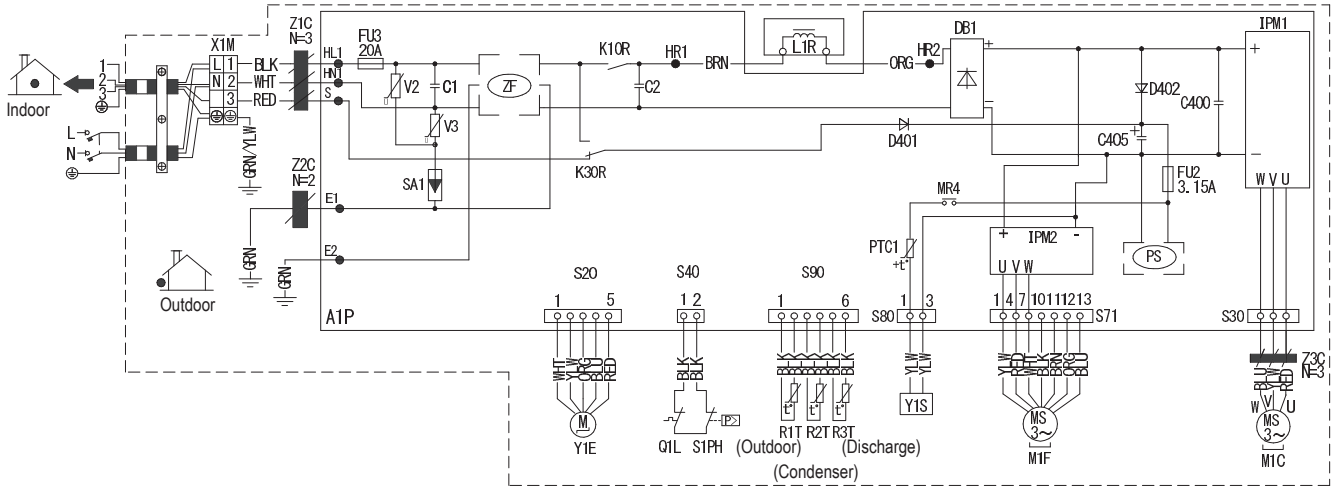

RXF20~35D + ARXF20~35D + RXF20~42E + ARXF20~42E

(1) Wiring diagram

English	Translation
Wiring diagram	Wiring diagram
Indoor	Indoor
Outdoor	Outdoor
Condenser	Condenser
Discharge	Discharge

(2) Notes

English	Translation
Note:	Note
⊕	Connection
X1M	Main terminal
- - - - - - -	Field supply
▭	PCB
⏚	Protective earth
⏚	Earth
▬▬▬	Field wire

NOTES:

BLK : Black

WHT : White

BRN : Brown

RED : Red

GRN : Green

YLW : Yellow

ORG : Orange

BLU : Blue

Refer to the nameplate for the power requirements.

(3) Legend

C*	Capacitor
D401, D402	Diode
DB1	Diode bridge
E1, S, HR1, HR2, X1A	Connector
FU2, FU3	Fuse
IPM*	Intelligent power module
K30R, K10R, MR4	Magnetic relay
L1R	Reactor

M1C	Compressor motor
M1F	Fan motor
A1P	Printed circuit board
PS	Switching power supply
Q1L	Overload protector
R1T	Thermistor (air)
R2T	Thermistor (heat exchanger)
R3T	Thermistor (discharge)
SA*	Surge arrestor
S10-S90	Connector
V2, V3	Varistor
X1M	Terminal strip
Y1S	Reversing solenoid valve coil
PTC1	Thermistor
Y1E	Electronic expansion valve coil
Z*C	Ferrite core
Z*F	Noise filter

Wiring diagram

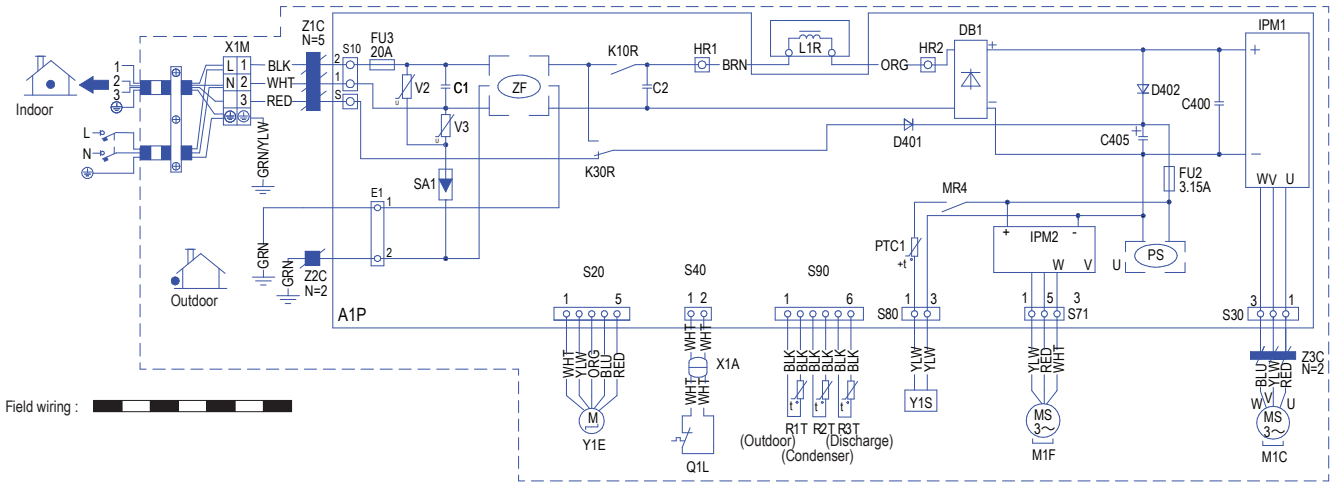

3D134368

RXF50A

(1) Wiring diagram

English	Translation
Wiring diagram	Wiring diagram
Indoor	Indoor
Outdoor	Outdoor
Condenser	Condenser
Discharge	Discharge

(2) Notes

English	Translation
⊸	Connection
X1M	Main terminal
- - - - - - -	Field supply
▭	PCB
⏚	Protective earth
⏚	Earth
▬▬▬	Field wire

NOTES:

BLK : Black

WHT : White

BRN : Brown

RED : Red

GRN : Green

YLW : Yellow

ORG : Orange

BLU : Blue

For the power requirements, refer to the nameplate.

(3) Legend

C*	Capacitor
DB1	Diode bridge
E1, E2, HL1, HN1, S	Connector
FU1, FU2, FU3	Fuse
IPM*	Intelligent power module
L	Live
M1C	Compressor motor
M1F	Fan motor
MR*	Magnetic relay

N	Neutral
PAM	Pulse-amplitude modulation
PCB	Printed circuit board
PS	Switching power supply
Q1L	Overload protector
R1T, R2T, R3T	Thermistor
S2 -S90	Terminal connector
SA1	Surge arrestor
V2, V3, V150	Varistor
X11A	Connector
X1M	Terminal strip
Y1E	Electronic expansion valve
Y1S	Reversing solenoid valve coil
Z*C	Ferrite core
Z*F	Noise filter

Wiring diagram

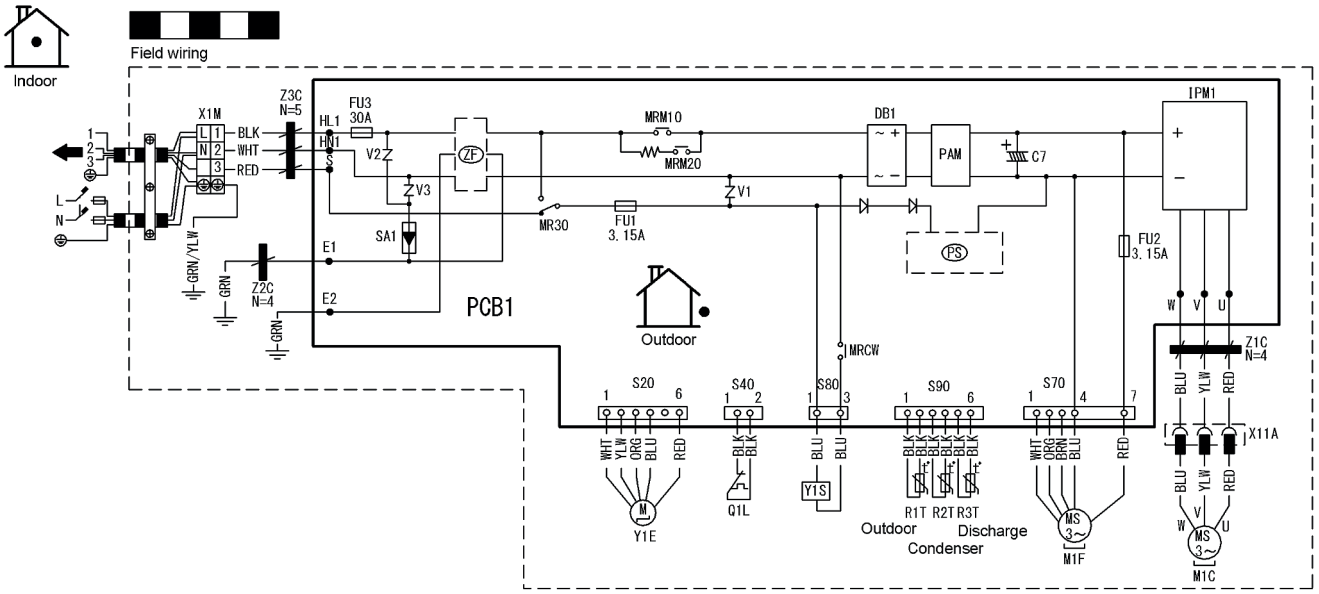

3D090522C

RXF60A

(1) Wiring diagram

English	Translation
Wiring diagram	Wiring diagram
Indoor	Indoor
Outdoor	Outdoor
Condenser	Condenser
To indoor unit	To indoor unit
Power supply	Power supply
Discharge	Discharge

(2) Notes

English	Translation
⊣	Connection
X1M	Main terminal
- - - - - - -	Field supply
▭	PCB
⏚	Protective earth
⏚	Earth
▬▬▬	Field wire

NOTES:

GRY : Grey

BLK : Black

WHT : White

BRN : Brown

RED : Red

GRN : Green

YLW : Yellow

ORG : Orange

BLU : Blue

For the power requirements, refer to the nameplate.

(3) Legend

C*	Capacitor
D*	Diode
DB1	Diode bridge
E1, E2, HL1, HN1, S, U, V, W	Connection
FU1, FU2, FU3	Fuse
IPM*	Intelligent power module

L	Live
M1C	Compressor motor
M1F	Fan motor
MR*	Magnetic relay
N	Neutral
N = 4, N= 5	Number of passes through ferrite core
PAM	Pulse-amplitude modulation
PCB	Printed circuit board
PS	Switching power supply
Q1L	Overload protector
R1T, R2T, R3T	Thermistor
S1PH, S2PH	High pressure switch
S2 -S90	Connector
SA1	Surge arrestor
V1 , V2, V3	Varistor
X11A, X14A	Connector
X1M	Terminal strip
Y1E	Electronic expansion valve coil
Y1S	Reversing solenoid valve coil
Z*C	Ferrite core
Z*F	Noise filter

Wiring diagram

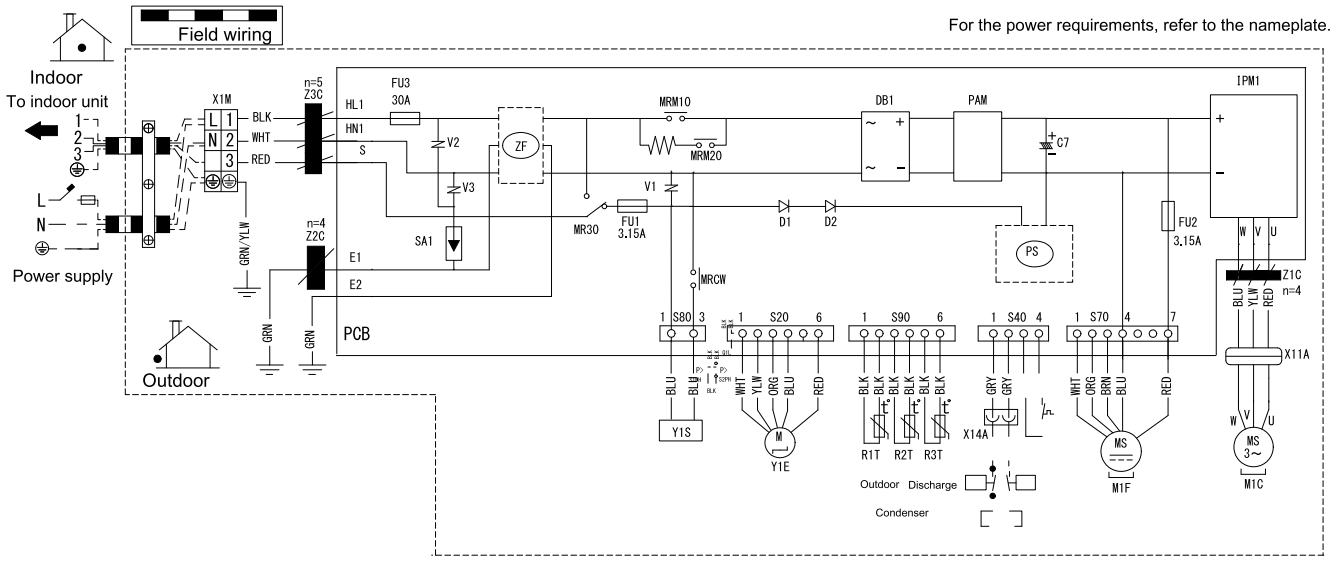

RXF71A + RXF50~60B + ARXF50~71A

(1) Wiring diagram

English	Translation
Wiring diagram	Wiring diagram
Indoor	Indoor
Outdoor	Outdoor
Condenser	Condenser
Discharge	Discharge

(2) Notes

English	Translation
⊸	Connection
X1M	Main terminal
- - - - - - -	Field supply
▭	PCB
⏚	Protective earth
⏚	Earth
▬▬▬	Field wire

NOTES:

BLK : Black

BLU : Blue

BRN : Brown

GRN : Green

GRY : Grey

ORG : Orange

RED : Red

WHT : White

YLW : Yellow

For the power requirements, refer to the nameplate.

(3) Legend

C*	Capacitor
D*	Diode
DB1	Diode bridge
E1, E2, HL1, HN1, S, U, V, W	Connector
FU1, FU2, FU3	Fuse
IPM*	Intelligent power module
L	Live
M1C	Compressor motor

M1F	Fan motor
MR*	Magnetic relay
N	Neutral
N = 4, N= 5	Number of passes
PAM	Pulse-amplitude modulation
PCB	Printed circuit board
PS	Switching power supply
Q1L	Overload protector
R1T, R2T, R3T	Thermistor
S1PH	High pressure switch
S2 -S90	Terminal connector
SA1	Surge arrestor
V1 , V2, V3	Varistor
X11A	Connector
X1M	Terminal strip
Y1E	Electronic expansion valve
Y1S	Reversing solenoid valve coil
Z*C	Ferrite core
Z*F	Noise filter

Wiring diagram

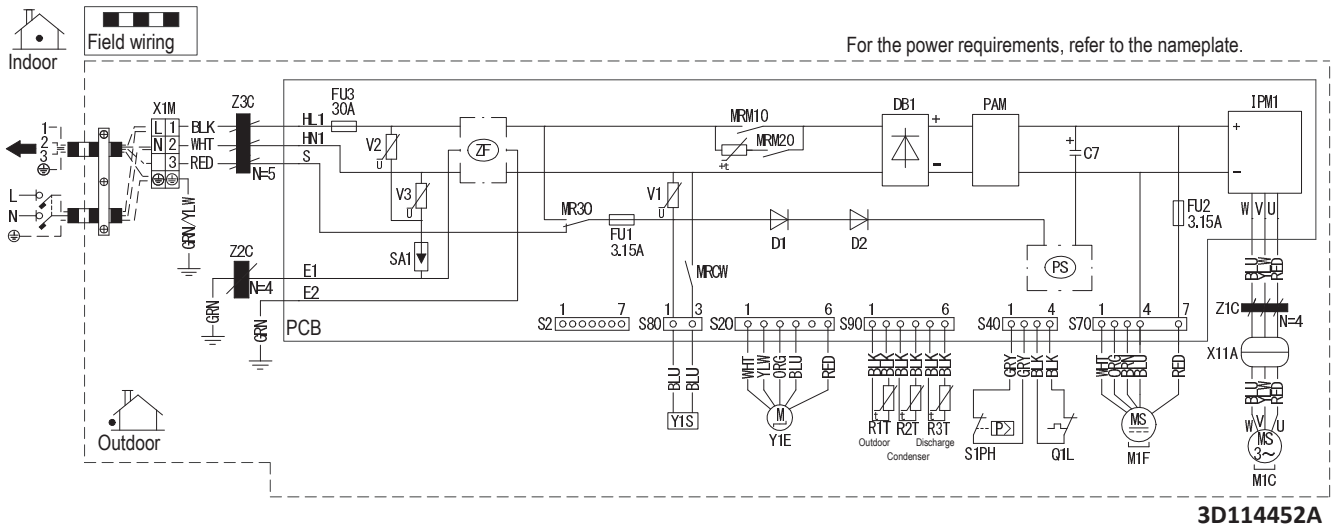

6.3 Piping diagram

6.3.1 Piping diagram: Indoor unit

FTXF20~35A

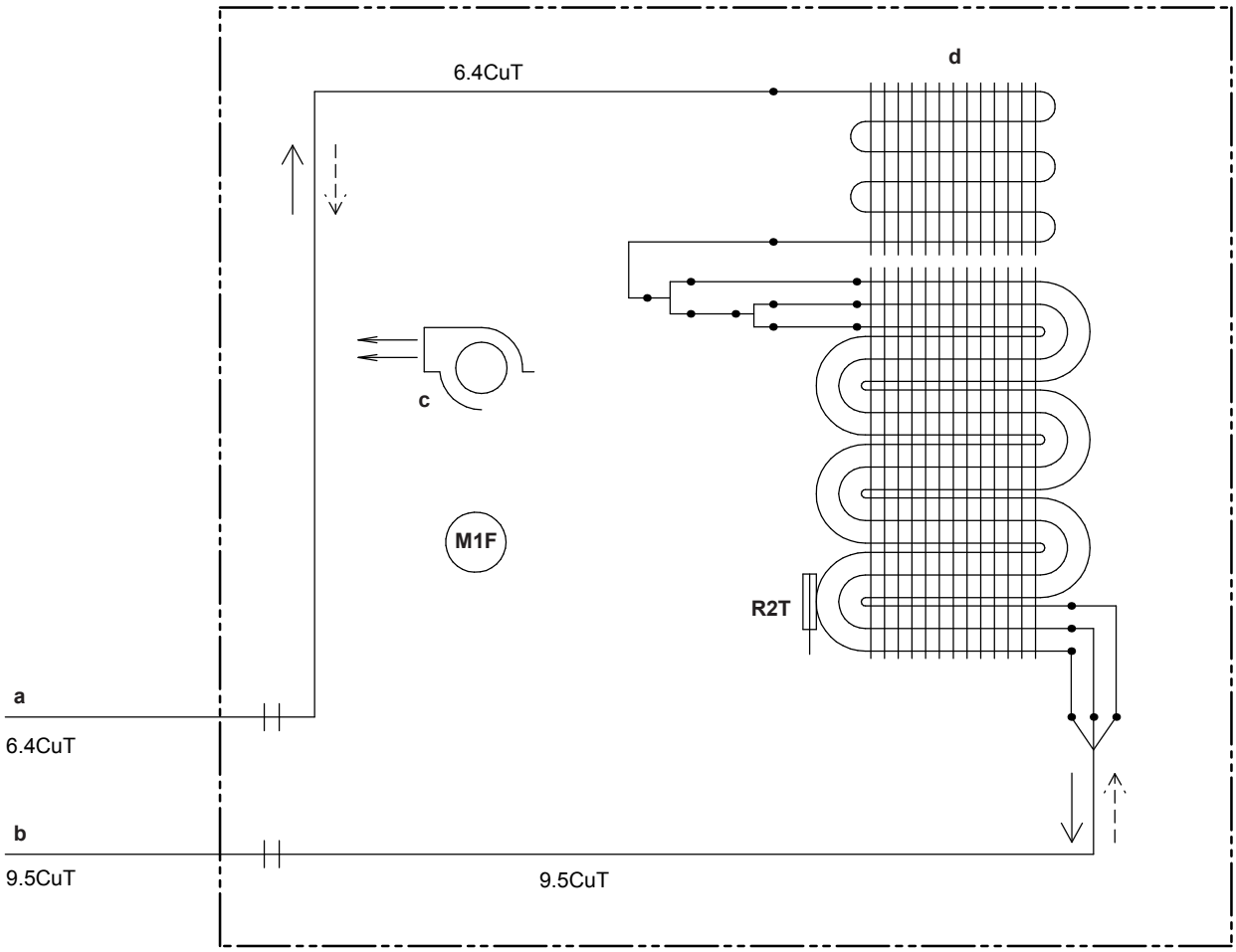

- **a** Field piping (liquid: Ø6.4 mm flare connection)
- **b** Field piping (gas: Ø9.5 mm flare connection)
- **c** Crossflow fan
- **d** Heat exchanger
- **M1F** Fan motor
- **R2T** Thermistor (heat exchanger)
- --► Heating
- —► Cooling

INFORMATION

The diagrams shown in this manual may be incorrect due to changes/updates to the unit. Correct diagrams are supplied with the unit and can also be found in the technical data book.

ATXF20~35A + ATXF20~35C + ATXF20~35D + FTXF20+25B + FTXF20~35C + FTXF20~35D

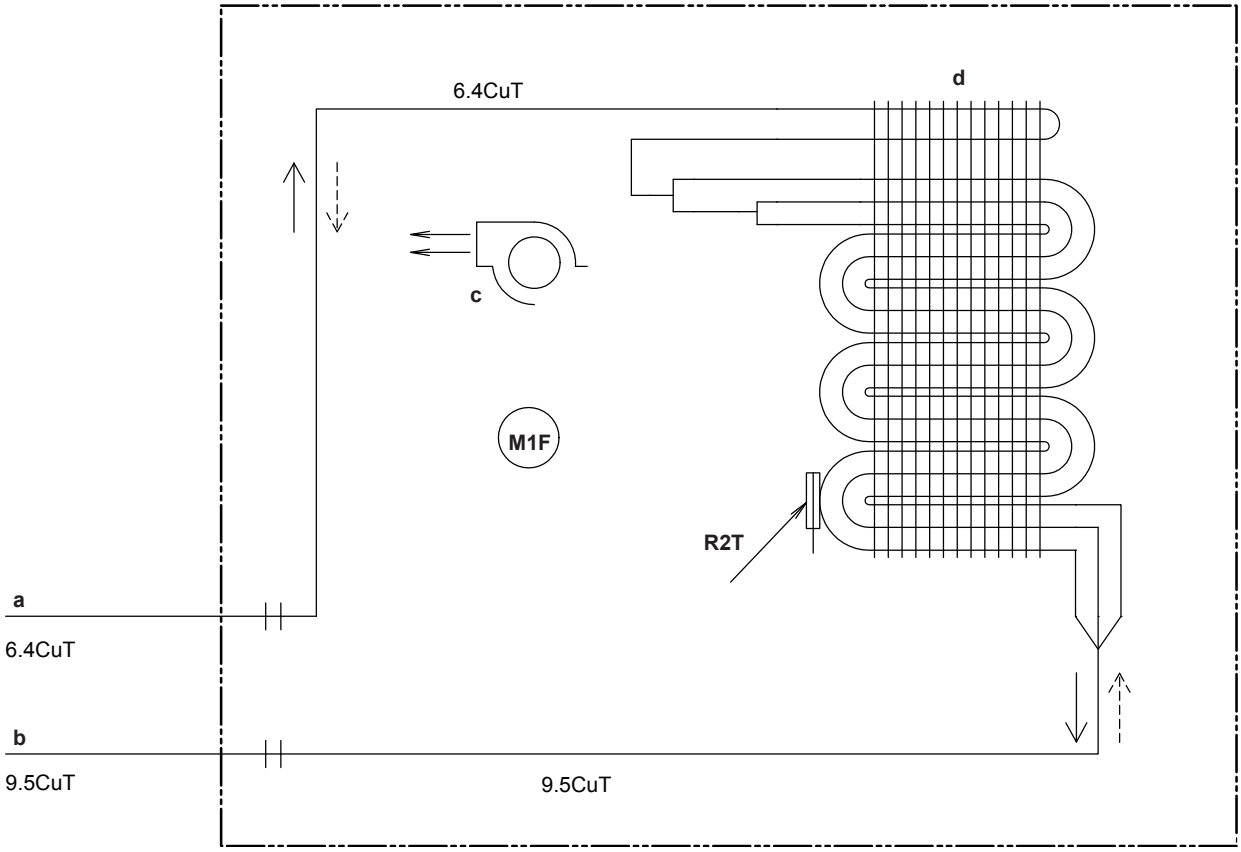

- **a** Field piping (liquid: Ø6.4 mm flare connection)
- **b** Field piping (gas: Ø9.5 mm flare connection)
- **c** Crossflow fan
- **d** Heat exchanger
- **M1F** Fan motor
- **R2T** Thermistor (heat exchanger)
- Heating
- Cooling

INFORMATION

The diagrams shown in this manual may be incorrect due to changes/updates to the unit. Correct diagrams are supplied with the unit and can also be found in the technical data book.

ATXF20+25E + FTXF20+25E

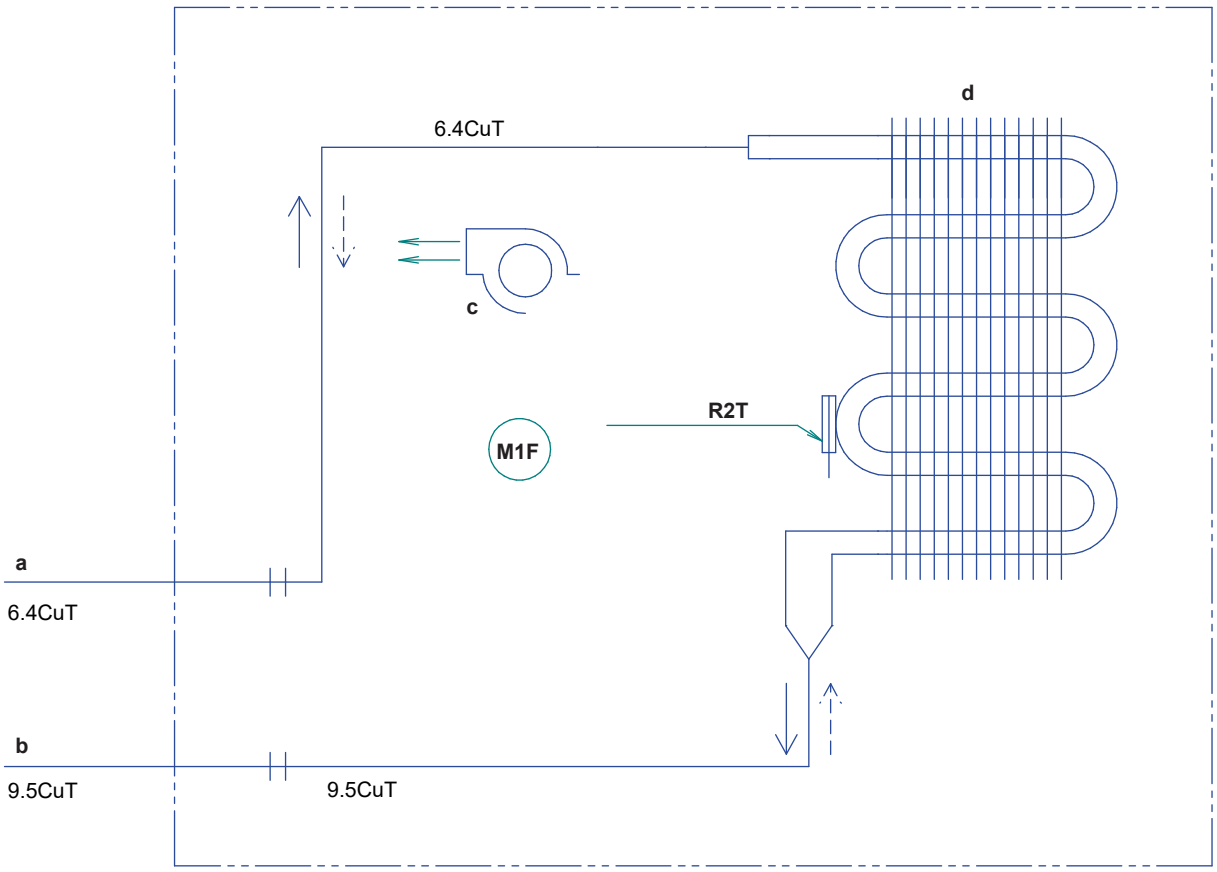

- **a** Field piping (liquid: Ø6.4 mm flare connection)
- **b** Field piping (gas: Ø9.5 mm flare connection)
- **c** Crossflow fan
- **d** Heat exchanger
- **M1F** Fan motor
- **R2T** Thermistor (heat exchanger)
- Heating
- Cooling

> **INFORMATION**
>
> The diagrams shown in this manual may be incorrect due to changes/updates to the unit. Correct diagrams are supplied with the unit and can also be found in the technical data book.

ATXF35E + FTXF35E

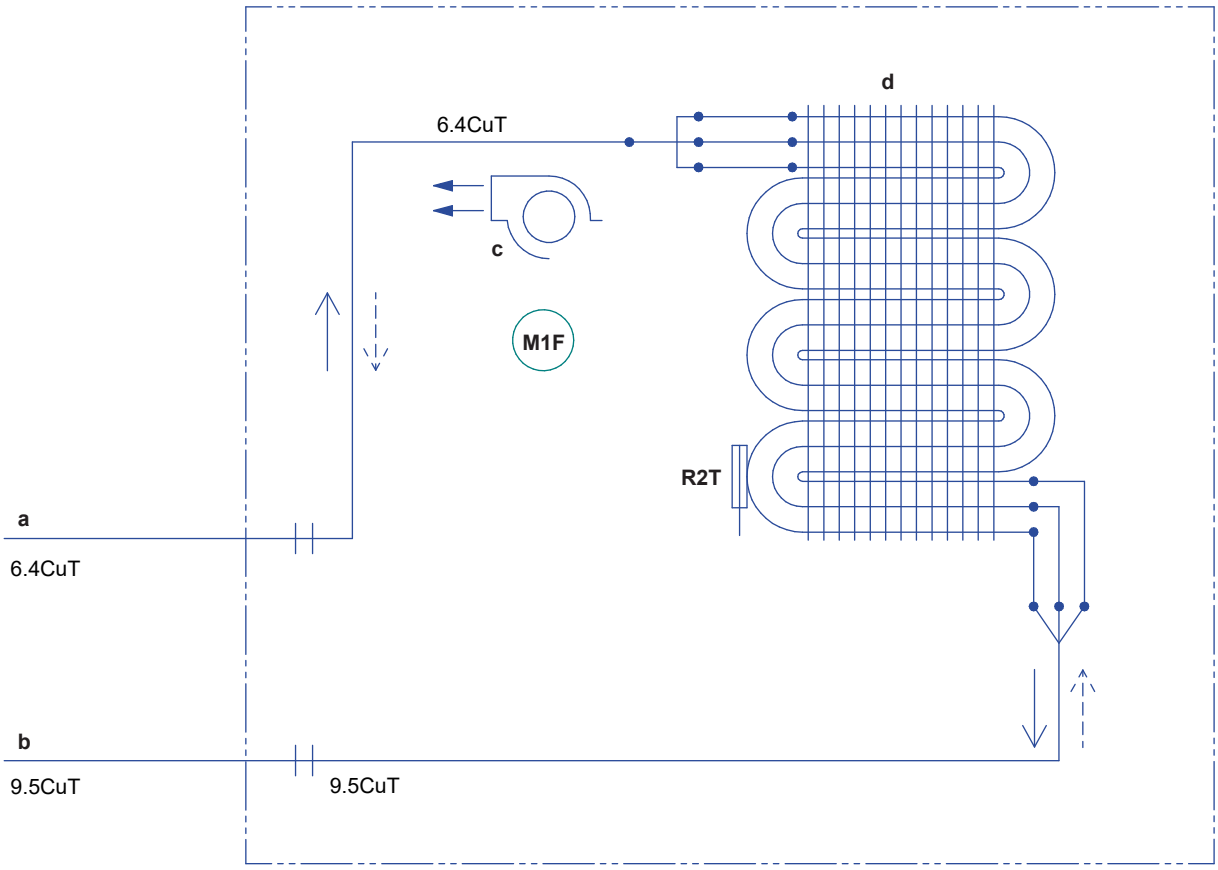

- **a** Field piping (liquid: Ø6.4 mm flare connection)
- **b** Field piping (gas: Ø9.5 mm flare connection)
- **c** Crossflow fan
- **d** Heat exchanger
- **M1F** Fan motor
- **R2T** Thermistor (heat exchanger)
- --► Heating
- —► Cooling

INFORMATION

The diagrams shown in this manual may be incorrect due to changes/updates to the unit. Correct diagrams are supplied with the unit and can also be found in the technical data book.

FTXF42C + FTXF42D + FTXF42E + ATXF42C + ATXF42D + ATXF42E

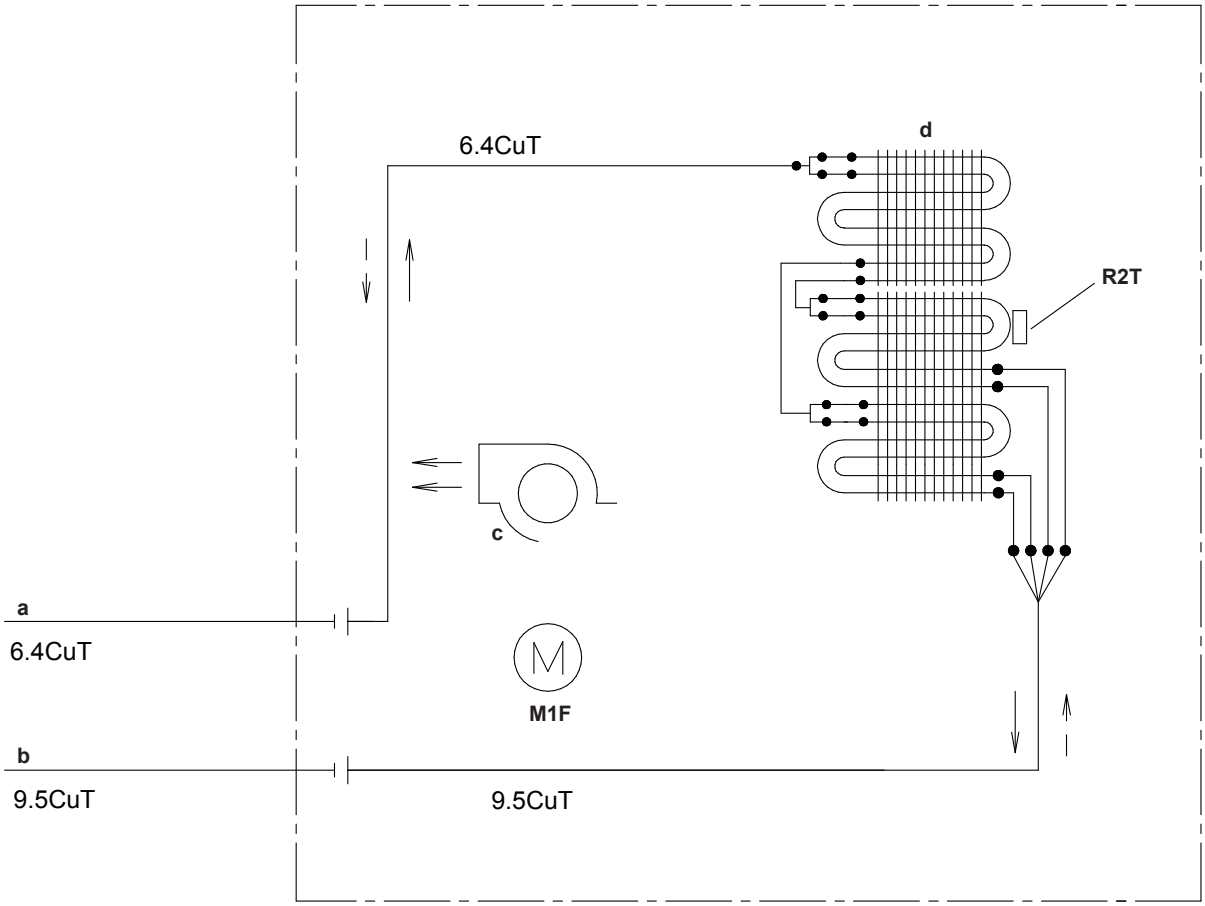

a	Field piping (liquid: Ø6.4 mm flare connection)
b	Field piping (gas: Ø9.5 mm flare connection)
c	Crossflow fan
d	Heat exchanger
M1F	Fan motor
R2T	Thermistor (heat exchanger)
--►	Heating
—►	Cooling

INFORMATION

The diagrams shown in this manual may be incorrect due to changes/updates to the unit. Correct diagrams are supplied with the unit and can also be found in the technical data book.

FTXF50~71A + ATXF50~71A

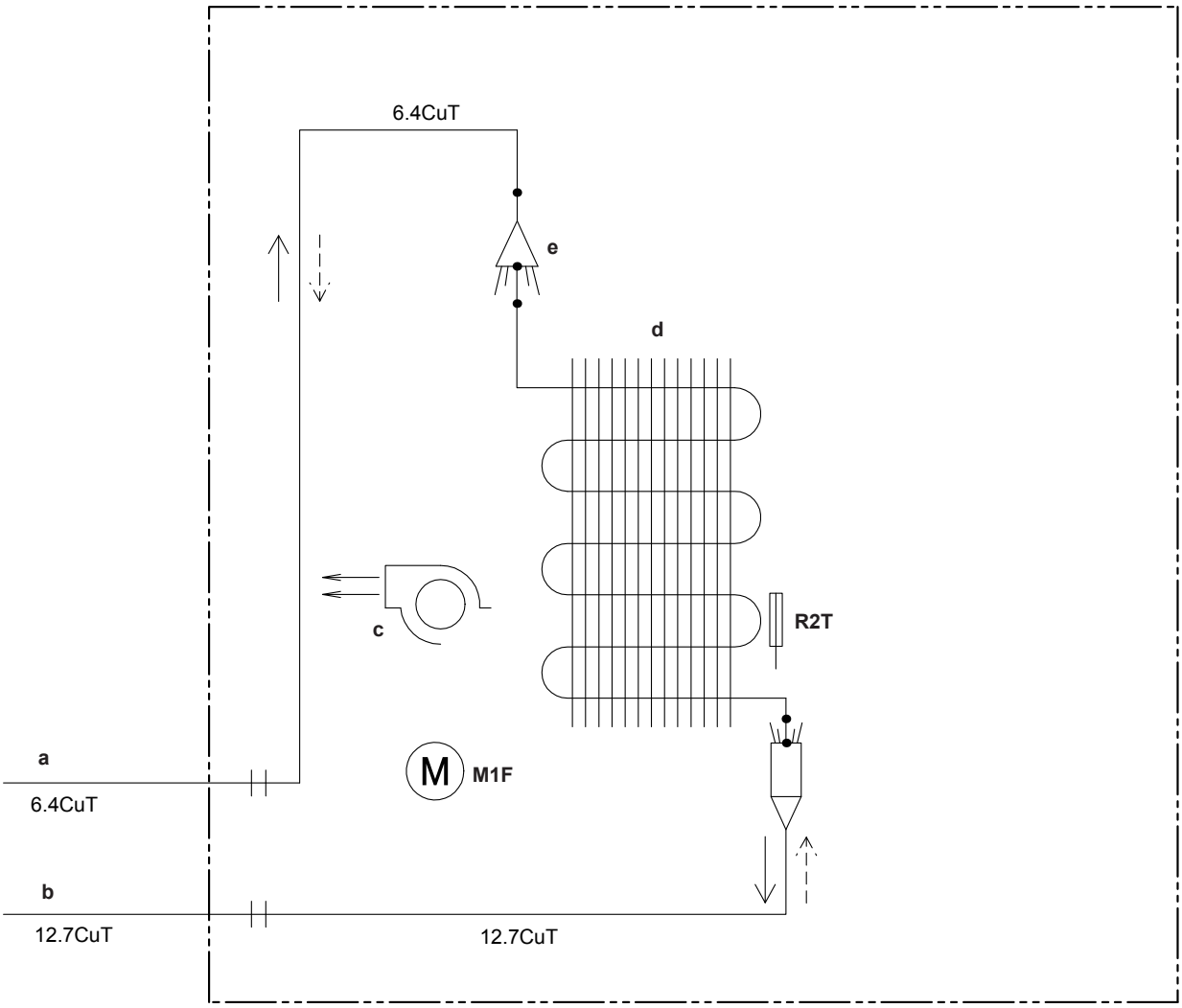

- **a** Field piping (liquid: Ø6.4 mm flare connection)
- **b** Field piping (gas: Ø12.7 mm flare connection)
- **c** Crossflow fan
- **d** Heat exchanger
- **e** Distributor
- **M1F** Fan motor
- **R2T** Thermistor (heat exchanger)
- --► Heating
- —► Cooling

INFORMATION

The diagrams shown in this manual may be incorrect due to changes/updates to the unit. Correct diagrams are supplied with the unit and can also be found in the technical data book.

6.3.2 Piping diagram: Outdoor unit

RXF20+25A + RXF20+25B + RXF20~35C + ARXF20+25A + ARXF20~35C

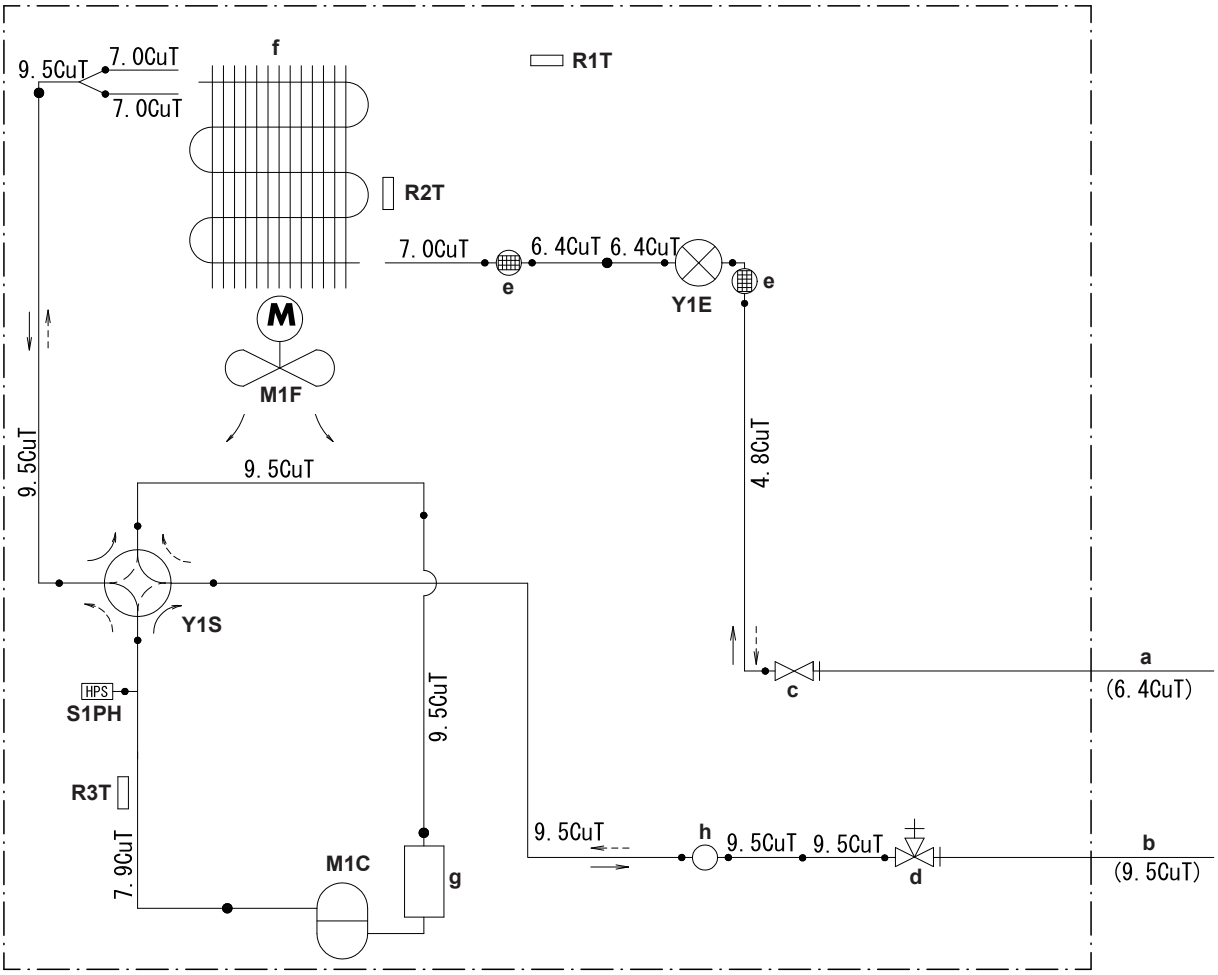

3D116254

- **a** Field piping (liquid: Ø6.4 mm flare connection)
- **b** Field piping (gas: Ø9.5 mm flare connection)
- **c** Stop valve (liquid)
- **d** Stop valve with service port (gas)
- **e** Muffler with filter
- **f** Heat exchanger
- **g** Accumulator
- **h** Muffler
- **M1C** Compressor
- **M1F** Fan
- **R1T** Thermistor (outdoor air)
- **R2T** Thermistor (heat exchanger)
- **R3T** Thermistor (compressor discharge)
- **Y1E** Electronic expansion valve
- **Y1S** Solenoid valve (4-way valve)
- **S1PH** High pressure switch
- Cooling
- Heating

INFORMATION

The diagrams shown in this manual may be incorrect due to changes/updates to the unit. Correct diagrams are supplied with the unit and can also be found in the technical data book.

RXF35A + RXF42C + RXF42D + ARXF35A + ARXF42C + ARXF42D

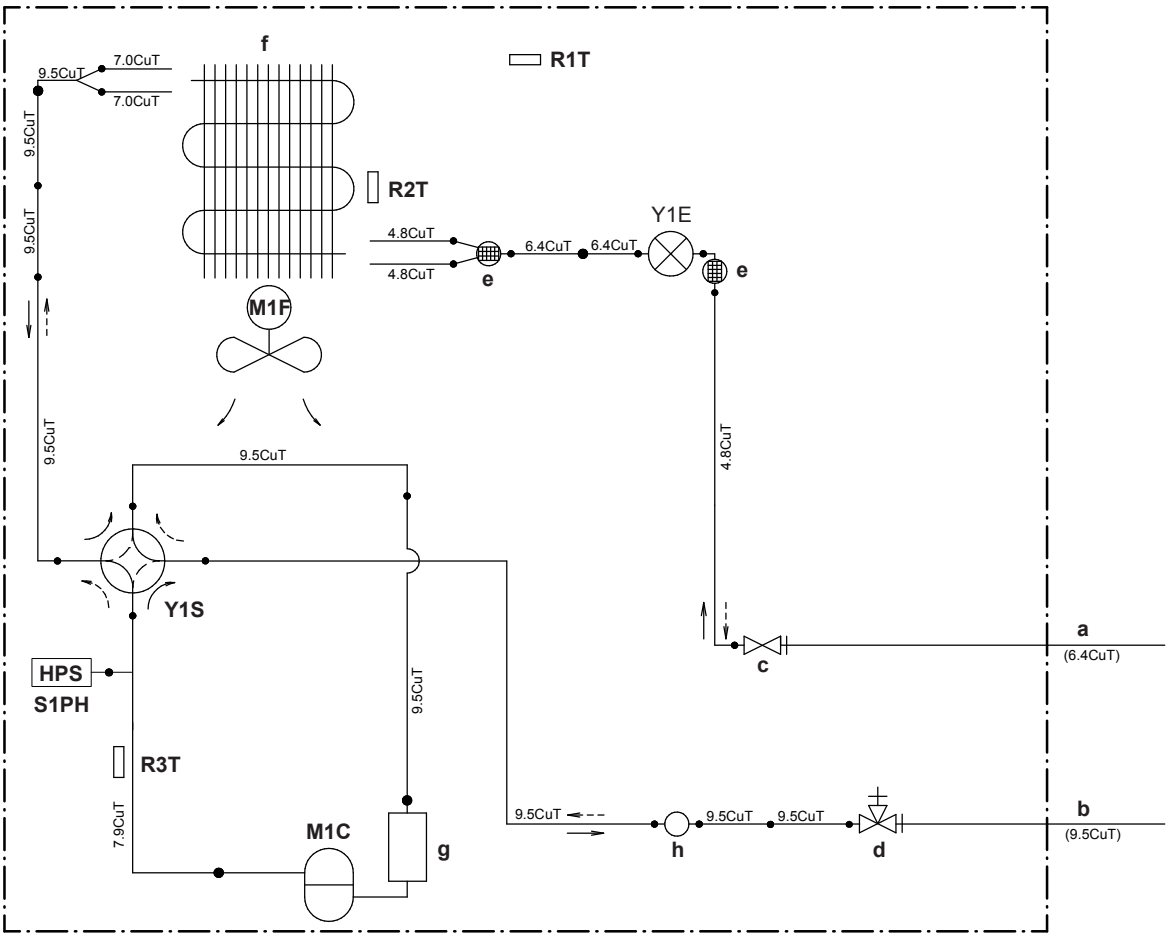

- **a** Field piping (liquid: Ø6.4 mm flare connection)
- **b** Field piping (gas: Ø9.5 mm flare connection)
- **c** Stop valve (liquid)
- **d** Stop valve with service port (gas)
- **e** Muffler with filter
- **f** Heat exchanger
- **g** Accumulator
- **h** Muffler
- **M1C** Compressor
- **M1F** Fan
- **R1T** Thermistor (outdoor air)
- **R2T** Thermistor (heat exchanger)
- **R3T** Thermistor (compressor discharge)
- **S1PH** High pressure switch
- **Y1E** Electronic expansion valve
- **Y1S** Solenoid valve (4-way valve)
- --► Cooling
- —► Heating

INFORMATION

The diagrams shown in this manual may be incorrect due to changes/updates to the unit. Correct diagrams are supplied with the unit and can also be found in the technical data book.

RXF20~35D + ARXF20~35D + RXF20~35E + ARXF20~35E

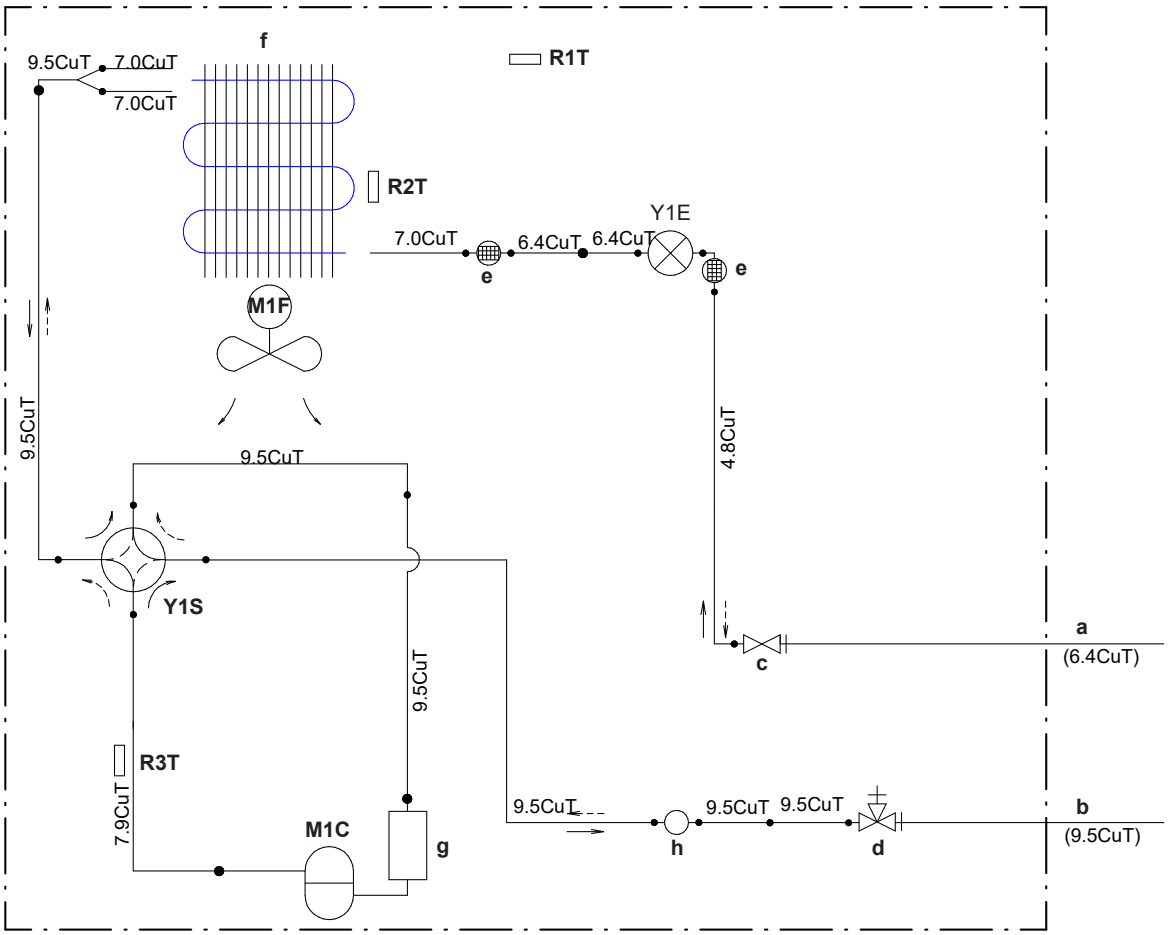

- **a** Field piping (liquid: Ø6.4 mm flare connection)
- **b** Field piping (gas: Ø9.5 mm flare connection)
- **c** Stop valve (liquid)
- **d** Stop valve with service port (gas)
- **e** Muffler with filter
- **f** Heat exchanger
- **g** Accumulator
- **h** Muffler
- **M1C** Compressor
- **M1F** Fan
- **R1T** Thermistor (outdoor air)
- **R2T** Thermistor (heat exchanger)
- **R3T** Thermistor (compressor discharge)
- **Y1E** Electronic expansion valve
- **Y1S** Solenoid valve (4-way valve)
- --► Cooling
- —► Heating

INFORMATION

The diagrams shown in this manual may be incorrect due to changes/updates to the unit. Correct diagrams are supplied with the unit and can also be found in the technical data book.

RXF42E + ARXF42E

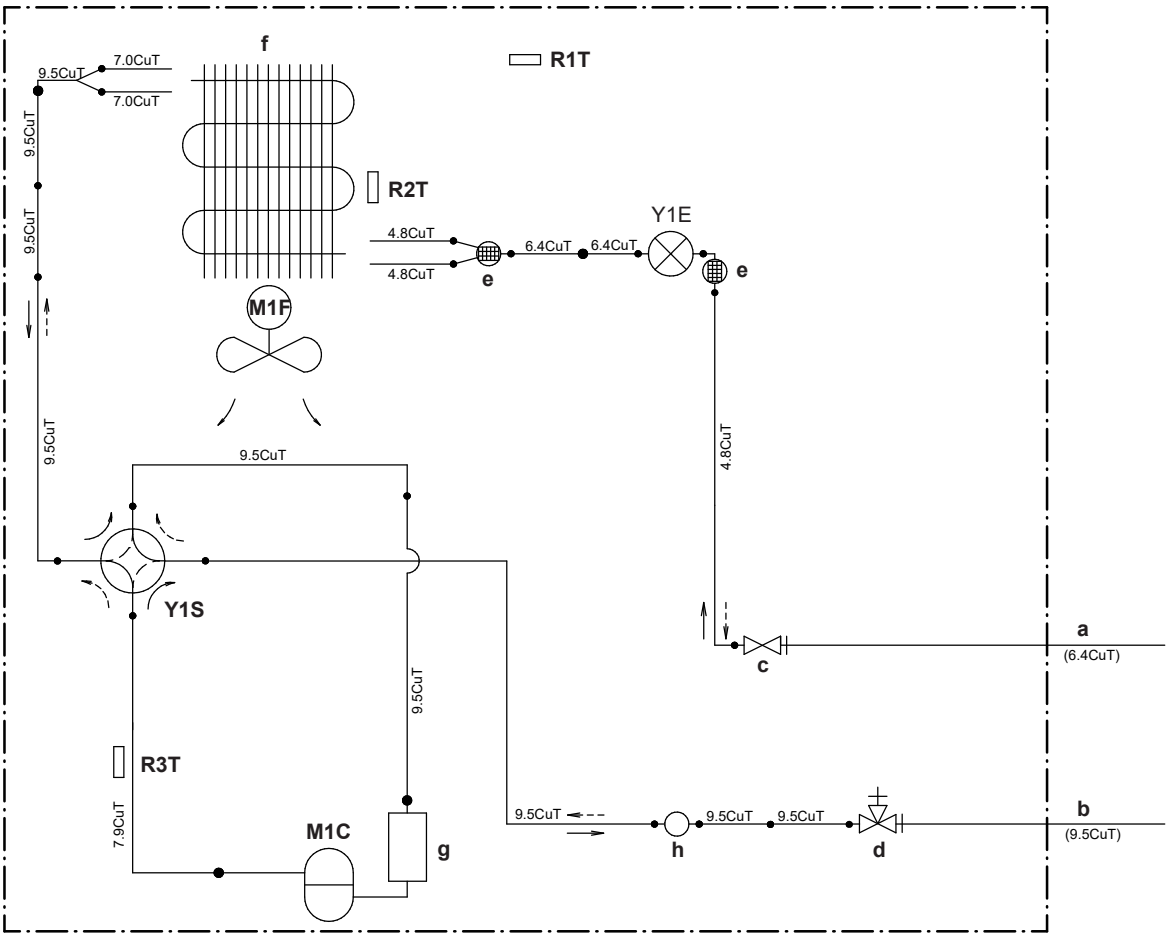

- **a** Field piping (liquid: Ø6.4 mm flare connection)
- **b** Field piping (gas: Ø9.5 mm flare connection)
- **c** Stop valve (liquid)
- **d** Stop valve with service port (gas)
- **e** Muffler with filter
- **f** Heat exchanger
- **g** Accumulator
- **h** Muffler
- **M1C** Compressor
- **M1F** Fan
- **R1T** Thermistor (outdoor air)
- **R2T** Thermistor (heat exchanger)
- **R3T** Thermistor (compressor discharge)
- **Y1E** Electronic expansion valve
- **Y1S** Solenoid valve (4-way valve)
- --► Cooling
- —► Heating

INFORMATION

The diagrams shown in this manual may be incorrect due to changes/updates to the unit. Correct diagrams are supplied with the unit and can also be found in the technical data book.

RXF50A

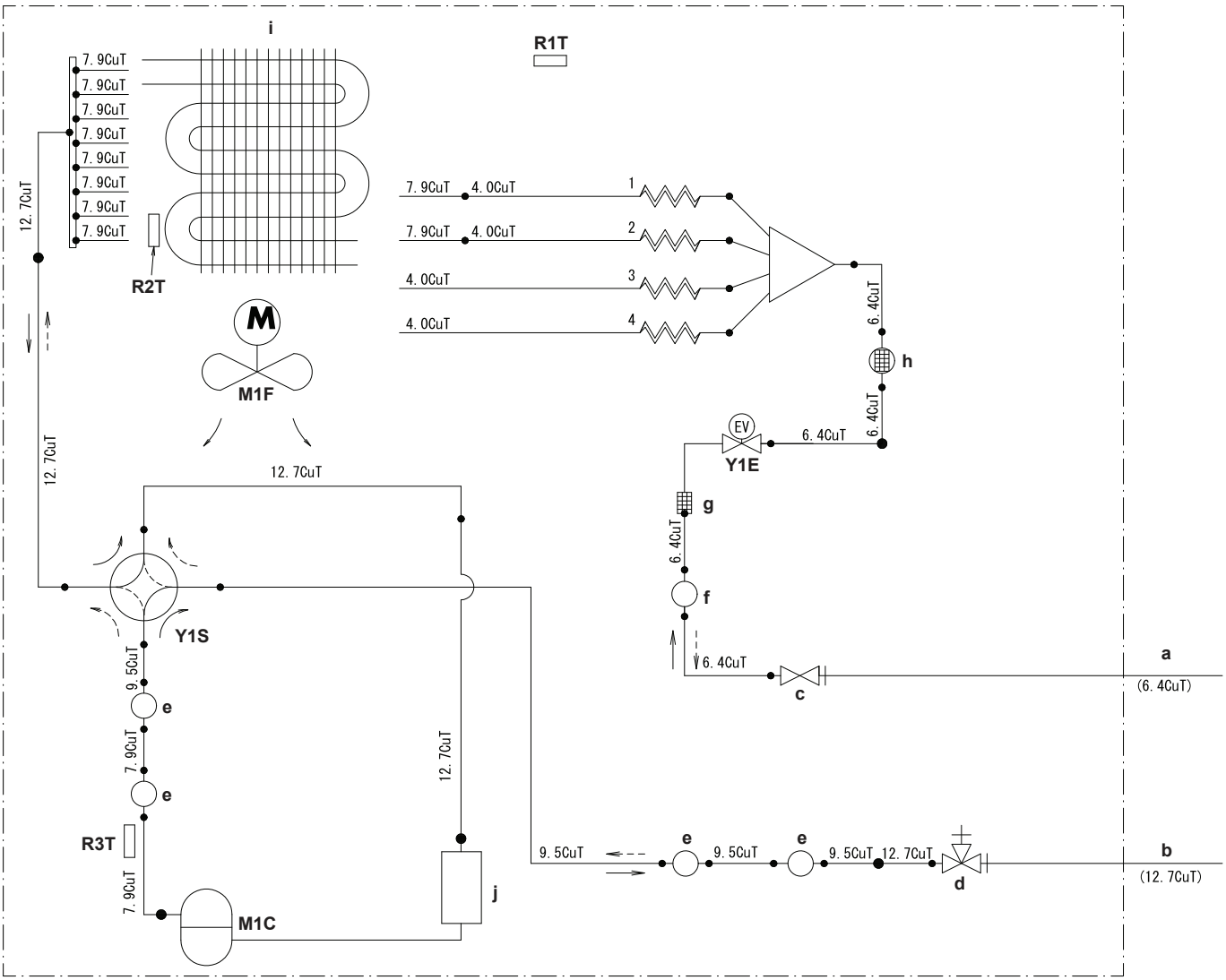

a	Field piping (liquid: Ø6.4 mm flare connection)
b	Field piping (gas: Ø12.7 mm flare connection)
c	Stop valve (liquid)
d	Stop valve (gas)
e	Muffler
f	Liquid receiver
g	Filter
h	Muffler with filter
i	Heat exchanger
j	Accumulator
M1C	Compressor
M1F	Fan
R1T	Thermistor (outdoor air)
R2T	Thermistor (heat exchanger)
R3T	Thermistor (compressor discharge)
Y1E	Electronic expansion valve
Y1S	Solenoid valve (4-way valve)
--►	Cooling
—►	Heating

INFORMATION

The diagrams shown in this manual may be incorrect due to changes/updates to the unit. Correct diagrams are supplied with the unit and can also be found in the technical data book.

ARXF50A + RXF50B

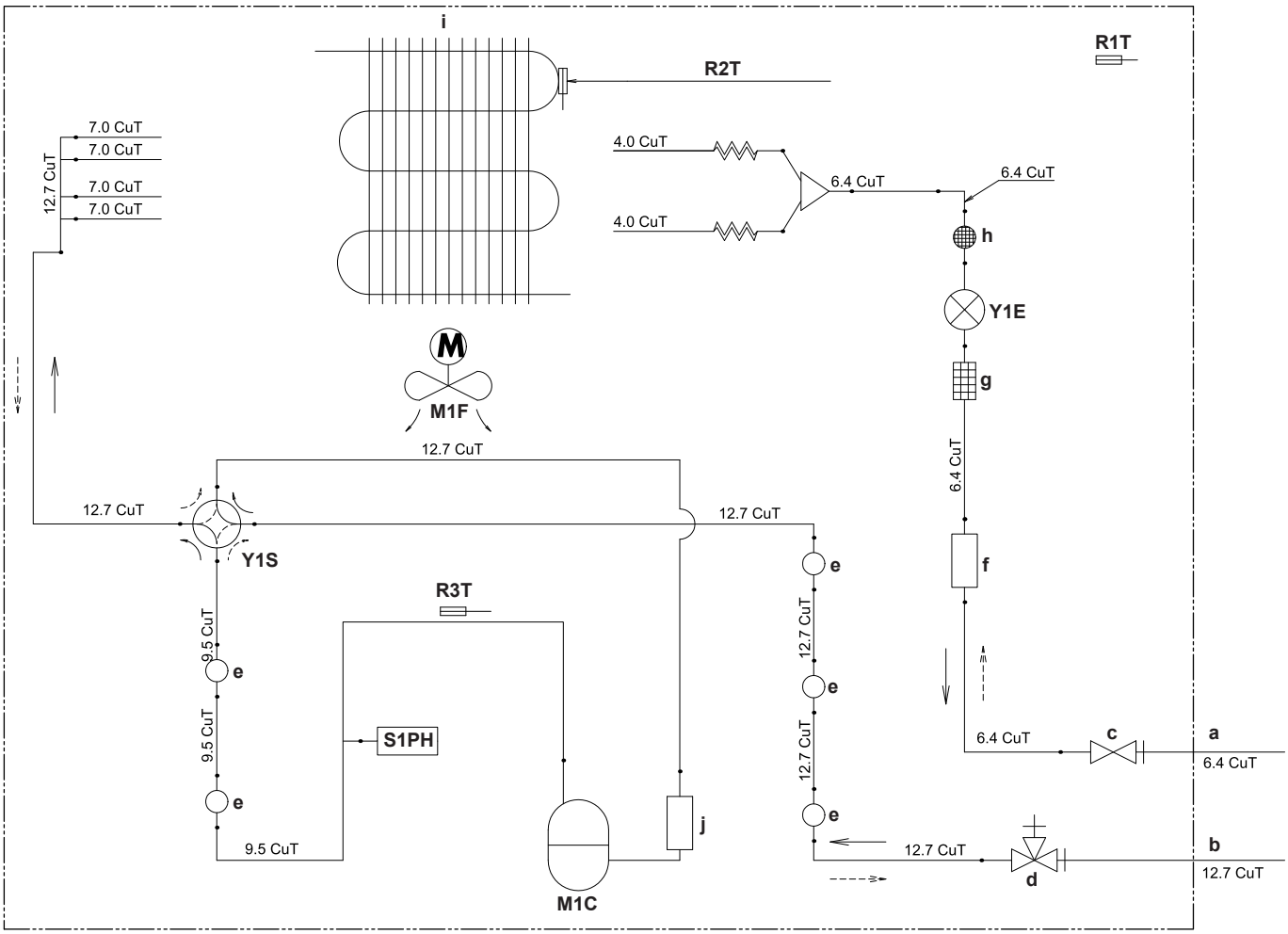

3D114451

- **a** Field piping (liquid: Ø6.4 mm flare connection)
- **b** Field piping (gas: Ø12.7 mm flare connection)
- **c** Stop valve (liquid)
- **d** Stop valve (gas)
- **e** Muffler
- **f** Liquid receiver
- **g** Filter
- **h** Muffler with filter
- **j** Heat exchanger
- **j** Accumulator
- **M1C** Compressor
- **M1F** Fan
- **R1T** Thermistor (outdoor air)
- **R2T** Thermistor (heat exchanger)
- **R3T** Thermistor (discharge pipe)
- **S1PH** High pressure switch
- **Y1E** Electronic expansion valve
- **Y1S** Solenoid valve (4-way valve)
- --► Heating
- —► Cooling

INFORMATION

The diagrams shown in this manual may be incorrect due to changes/updates to the unit. Correct diagrams are supplied with the unit and can also be found in the technical data book.

RXF60A

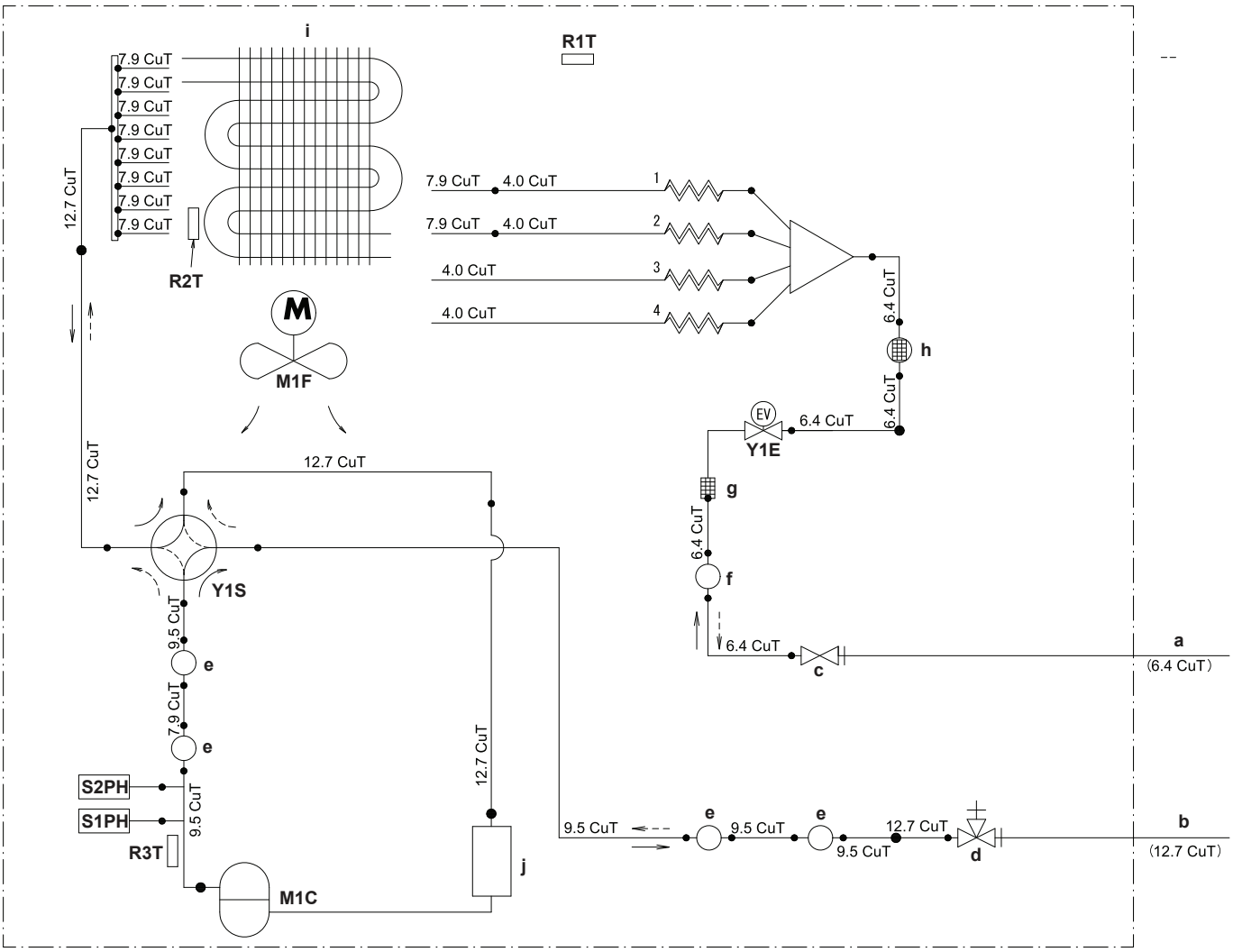

- **a** Field piping (liquid: Ø6.4 mm flare connection)
- **b** Field piping (gas: Ø12.7 mm flare connection)
- **c** Stop valve (liquid)
- **d** Stop valve (gas)
- **e** Muffler
- **f** Liquid receiver
- **g** Filter
- **h** Muffler with filter
- **i** Heat exchanger
- **j** Accumulator
- **M1C** Compressor
- **M1F** Fan
- **R1T** Thermistor (outdoor air)
- **R2T** Thermistor (heat exchanger)
- **R3T** Thermistor (compressor discharge)
- **S1PH** High pressure switch (manual reset)
- **S2PH** High pressure switch (automatic reset)
- **Y1E** Electronic expansion valve
- **Y1S** Solenoid valve (4-way valve)
- --► Cooling
- —► Heating

INFORMATION

The diagrams shown in this manual may be incorrect due to changes/updates to the unit. Correct diagrams are supplied with the unit and can also be found in the technical data book.

RXF71A + RXF60B + ARXF60~71A

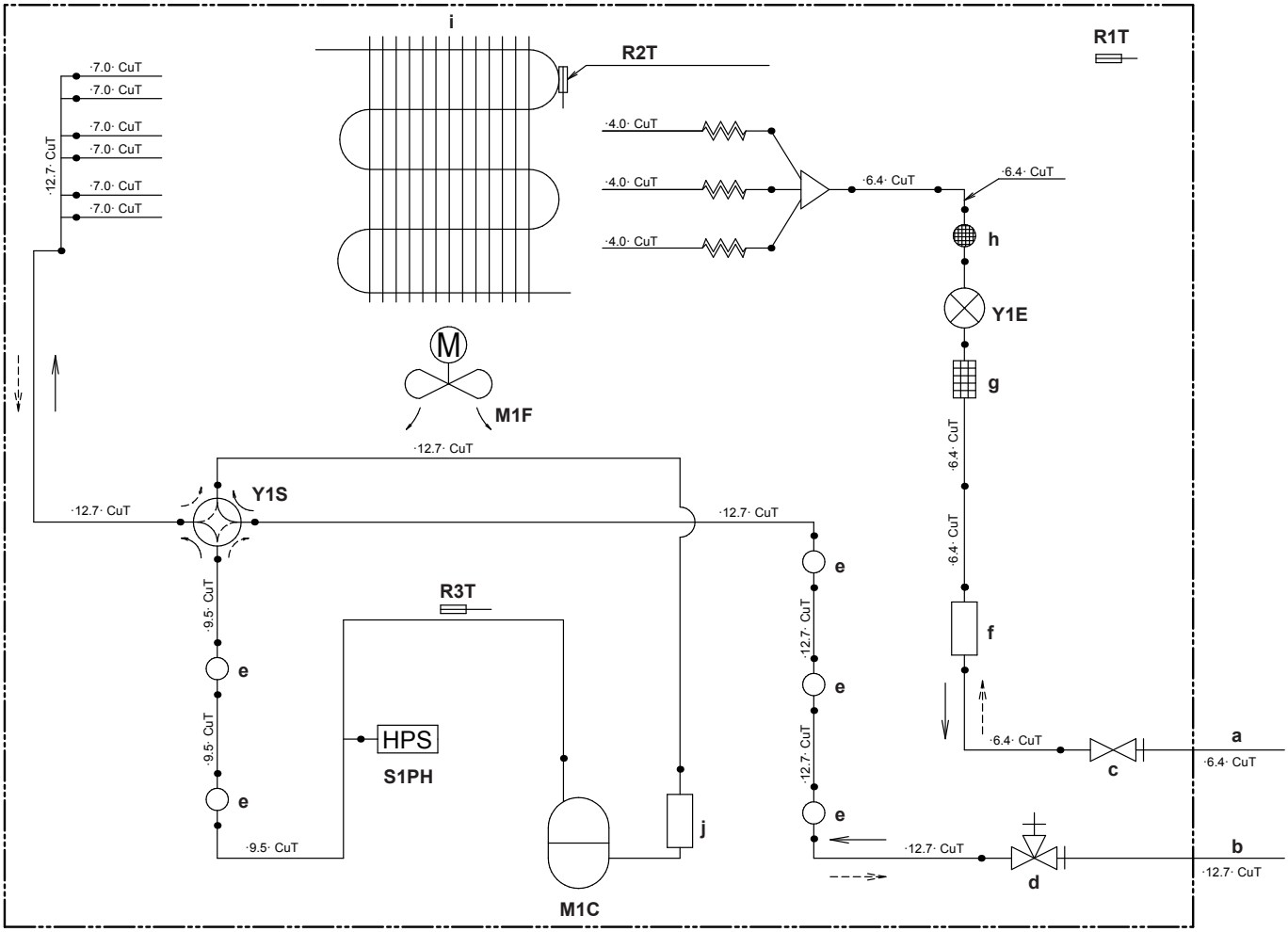

- **a** Field piping (liquid: Ø6.4 mm flare connection)
- **b** Field piping (gas: Ø12.7 mm flare connection)
- **c** Stop valve (liquid)
- **d** Stop valve (gas)
- **e** Muffler
- **f** Liquid receiver
- **g** Filter
- **h** Muffler with filter
- **i** Heat exchanger
- **j** Accumulator
- **M1C** Compressor
- **M1F** Fan
- **R1T** Thermistor (outdoor air)
- **R2T** Thermistor (heat exchanger)
- **R3T** Thermistor (compressor discharge)
- **S1PH** High pressure switch
- **Y1E** Electronic expansion valve
- **Y1S** Solenoid valve (4-way valve)
- --► Heating
- —► Cooling

INFORMATION

The diagrams shown in this manual may be incorrect due to changes/updates to the unit. Correct diagrams are supplied with the unit and can also be found in the technical data book.

6.4 Component overview

6.4.1 Component overview: Indoor unit

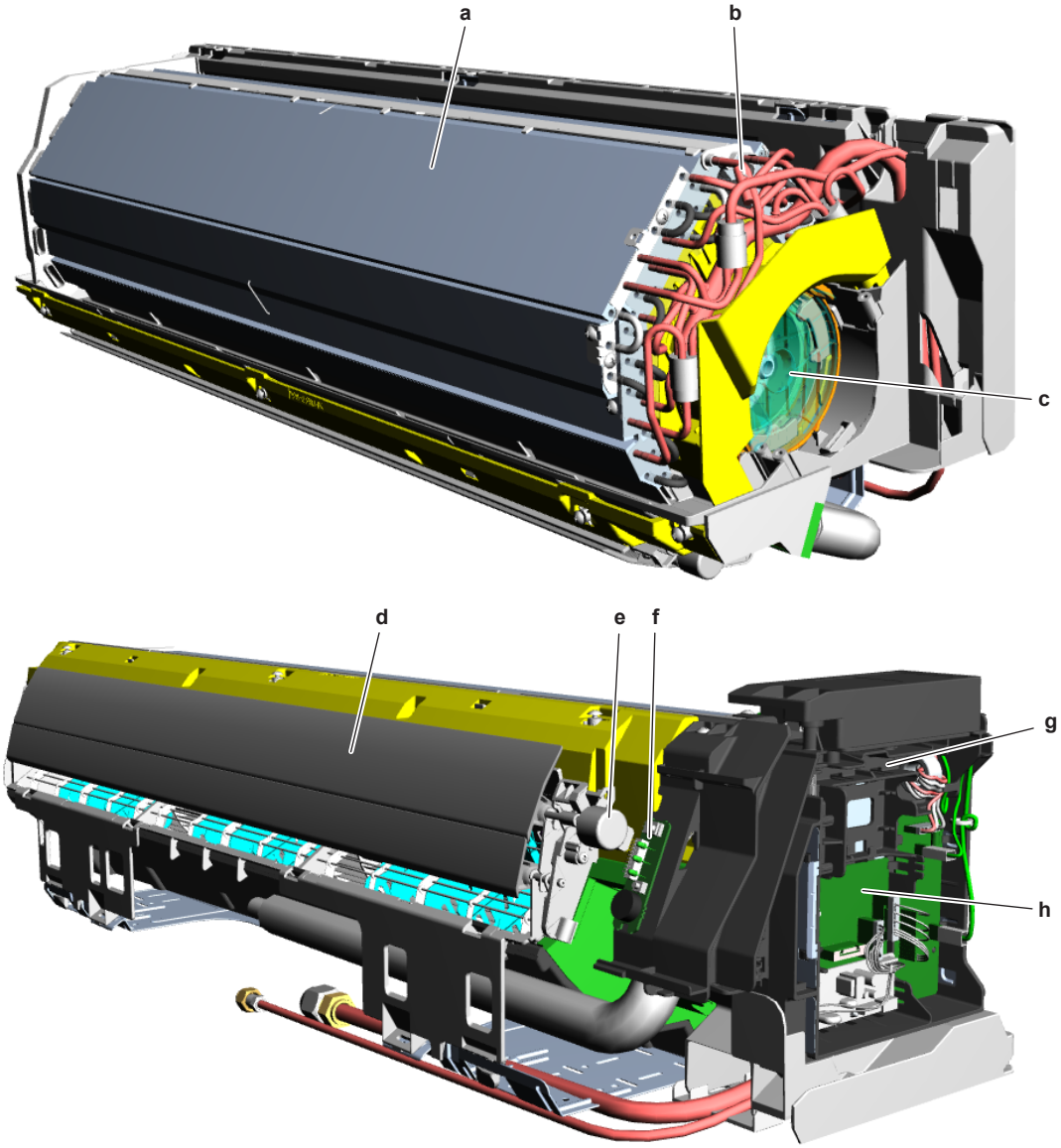

- **a** Heat exchanger
- **b** Heat exchanger thermistor R2T
- **c** Fan motor
- **d** Swing flap
- **e** Swing flap motor
- **f** Room thermistor R1T PCB
- **g** Switch box
- **h** Indoor unit PCB

6.4.2 Component overview: Outdoor unit

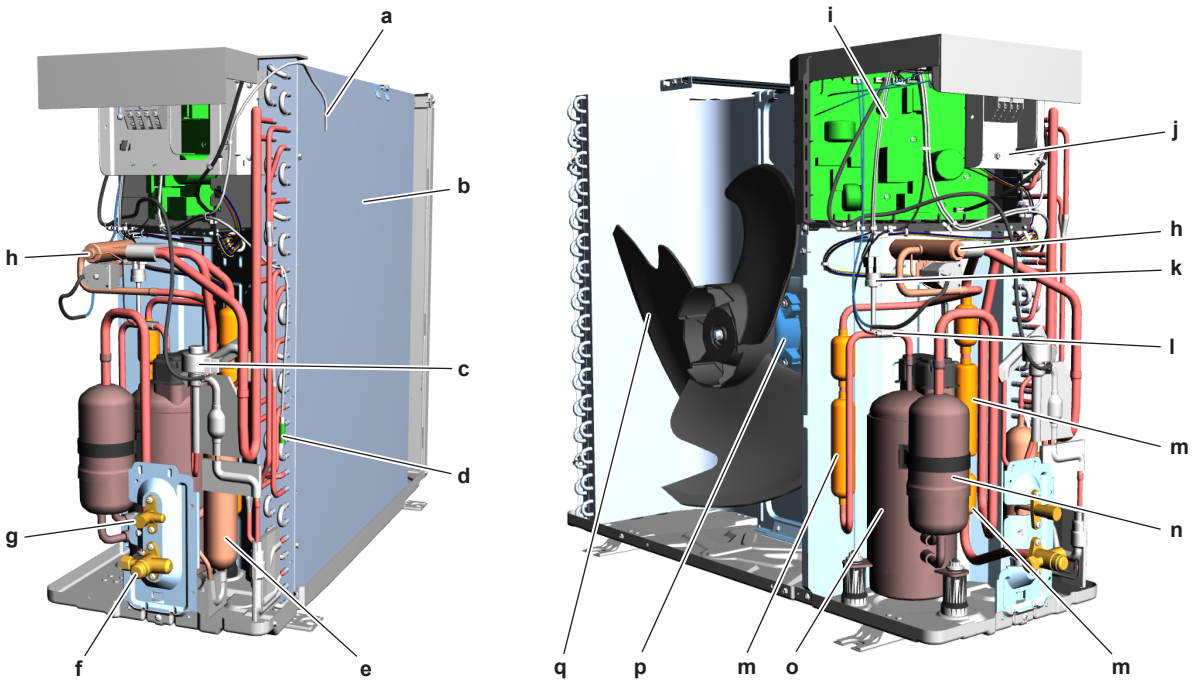

- **a** Air thermistor R1T
- **b** Heat exchanger
- **c** Expansion valve
- **d** Heat exchanger thermistor R2T
- **e** Liquid receiver
- **f** Stop valve with service port (gas)
- **g** Stop valve (liquid)
- **h** 4-way valve coil
- **i** Main + inverter PCB
- **j** Service PCB
- **k** High pressure switch (NOT for RXF50A, (A)RXF20~35D and (A)RXF20~42E)
- **l** Discharge pipe thermistor R3T
- **m** Muffler
- **n** Accumulator
- **o** Compressor
- **p** Fan motor
- **q** Fan

6.5 Field information report

See next page.

In case a problem occurred on the unit which could not be resolved by using the content of this service manual or in case you have a problem which could be resolved but of which the manufacturer should be notified, we advise you to contact your distributor.
To facilitate the investigation, additional information is required. Please fill out the following form before contacting your distributor.

FIELD INFORMATION REPORT	
Key person information	
Name:	Company name:
Your contact details Phone number:	E-mail address:
Site address:	
Your reference:	Date of visit:
Claim information	
Title:	
Problem description:	
Error code:	Trouble date:
Problem frequency:	
Investigation steps done:	
Insert picture of the trouble.	
Current situation (solved, not solved,…):	
Countermeasures taken:	
Comments and proposals:	
Part available for return (if applicable):	

Application information
Application (house, apartment, office,…):
New project or reimbursement:
Heat emitters (radiators / under floor heating / fan coils /…):
Hydraulic layout (simple schematic):

Unit / Installation information	
Model name:	Serial number:
Installation / commissioning date:	Software version hydro PCB A1P
	Software version hydro PCB A5P
Software version user interface:	Software version outdoor PCB:
Minimum water volume:	Maximum water volume:
Brine composition and mixture:	
Brine freeze up temperature:	
Space heating control (leaving water temperature, room thermostat, external room thermostat):	
Space heating setpoint:	
Domestic hot water control (reheat only, schedule only, reheat + schedule):	
Domestic hot water setpoint:	

Provide pictures of the field settings overview (viewable on the user interface).

6.6 Service tools

1 For an overview of the available service tools, check the Daikin Business Portal (authentication required).

2 Go to the tab After-sales support on the left navigation pane and select Technical support.

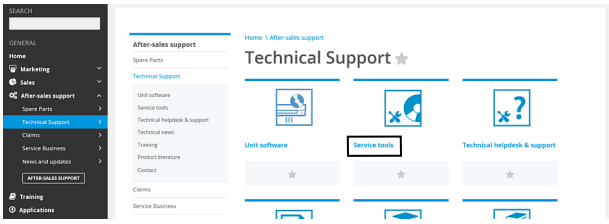

3 Click the button Service tools. An overview of the available service tools for the different products is shown. Also additional information on the service tools (instruction, latest software) can be found here.

6.7 Field settings

6.7.1 Field settings: Indoor unit

To control the indoor unit fan during thermostat off in cooling

> **INFORMATION**
>
> As this field setting is NOT available on the standard remote controller of this unit, order one of the following remote controllers and perform as described below:
>
> - ARC480A11
> - ARC480A53
> - ARC466A33
> - ARC466A58
> - ARC466A67

Using remote controller ARC480A11 or ARC480A53

1. Press [TEMP ^], [TEMP v], and [OFF] simultaneously.
2. Press [TEMP ^].
3. Select SU.
4. Press [FAN] to confirm.
5. Press [TEMP ^].
6. Select 4.
7. Press [FAN] to confirm.
8. Press [TEMP ^].
9. Select 0 (0: fan ON, 1: fan OFF (factory setting)).
10. Press [FAN] to confirm.

Using remote controller ARC466A33, ARC466A58 or ARC466A67

11. Press [Temp ▲], [Temp ▼], and [Mode] simultaneously.
12. Press [Temp ▲].
13. Select SU.
14. Press [Mode] to confirm.
15. Press [Temp ▲].
16. Select 4.
17. Press [Mode] to confirm.
18. Press [Temp ▲].
19. Select 0 (0: fan ON, 1: fan OFF (factory setting)).
20. Press [Mode] to confirm.

6.7.2 Field settings: Outdoor unit

To set the facility settings

> **INFORMATION**
>
> These settings are only to be used for facilities such as equipment or computer rooms and never in a residence or office with people.

1 Cut the jumper J6 on the circuit board using nippers or a similar tool to expand the operation range of the outdoor unit down to –15°C.

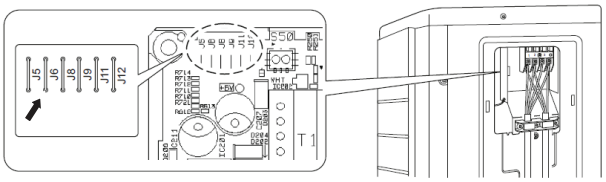

> **INFORMATION**
>
> The outdoor unit will stop operating when the temperature drops below –20°C and start back up once the temperature rises again.

2 Below is an overview of the other jumpers settings:

- J5: No function for this unit
- J8: Cold region setting (changing the operating range from –10°C to –15°C)
- J9: No function for this unit
- J11: Protection for error memory overwrite (only to be used during development)
- J12: No function for this unit

Copyright 2018 Daikin

DAIKIN EUROPE N.V.

Zandvoordestraat 300, B-8400 Oostende, Belgium

ESIE18-12G 2023.01