°DAICHI

R410A

Engineering Data

Ceiling & Floor DFT IDU

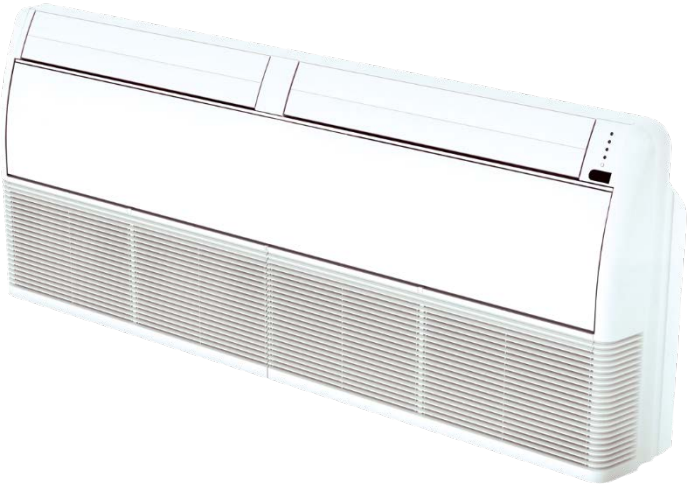

DATA70ALKS1

DATA80ALKS1

DATA120ALKS1

DATA140ALKS1

Ceiling & Floor

1 Specifications 4

2 Dimensions 5

3 Unit Placement 6

4 Piping Diagram 7

6 Capacity Tables 8

7 Electrical Characteristics 9

8 Sound Levels 10

DATA70ALKS1 / DATA80ALKS1 / DATA120ALKS1 / DATA140ALKS1

Model			DATA70ALKS1	DATA80ALKS1	DATA120ALKS1	DATA140ALKS1
Power supply			1 phase, 220-240V,50Hz			
Cooling	Capacity	kW	7.1	8.0	11.2	14.0
	Input	W	125	130	182	182
Indoor fan motor	Type		AC			
	Quantity		1		2	
Indoor coil	Number of rows		3			
	Tube pitch x row pitch	mm	25.4×22			
	Fin spacing	mm	1.8			
	Fin type		Hydrophilic aluminum			
	Diameter & type	mm	Φ9.53, inner-groove tube			
	Dimensions (L x H x W)	mm	804×254×66	1094×254×66	1360×254×66	
	Number of circuits		3	5		
Indoor air flow (H/M/L)		m3/h	800/600/500	1200/900/700	1980/1860/1730	
Sound pressure level(H/M/L)		dB(A)	43/41/38	45/43/40	47/45/42	
Sound power level(H/M/L)		dB(A)	56/54/51	58/56/53	60/58/55	
Indoor unit	Dimensions (W x H x D)	mm	990×203×660	1280×203×660	1670×244×680	
	Packing (W x HxD)	mm	1089×296×744	1379×296×744	1764×329×760	
	Net/Gross weight	kg	28/34	34.5/41	54/59	
Piping connections	Liquid pipe	mm	Φ9.53			
	Gas pipe	mm	Φ15.9			
	Drain pipe	mm	ODΦ25			

Notes:

1. Indoor temperature 27°C DB, 19°C WB; outdoor temperature 35°C DB; equivalent refrigerant piping length 7.5m with zero level difference.
2. Fan motor speed and air flow rate are from the highest speed to the lowest speed, total 3 steps for each model.
3. Sound pressure level is from highest level to lowest level, total 3 steps for each model. Sound pressure level is measured in a semi-anechoic chamber.
4. Unit body dimensions given are the largest external dimensions of the unit, including hanger attachments.

2 Dimensions

2.1 Unit Dimensions

Figure 2.1: Ceiling & floor dimensions (unit: mm)

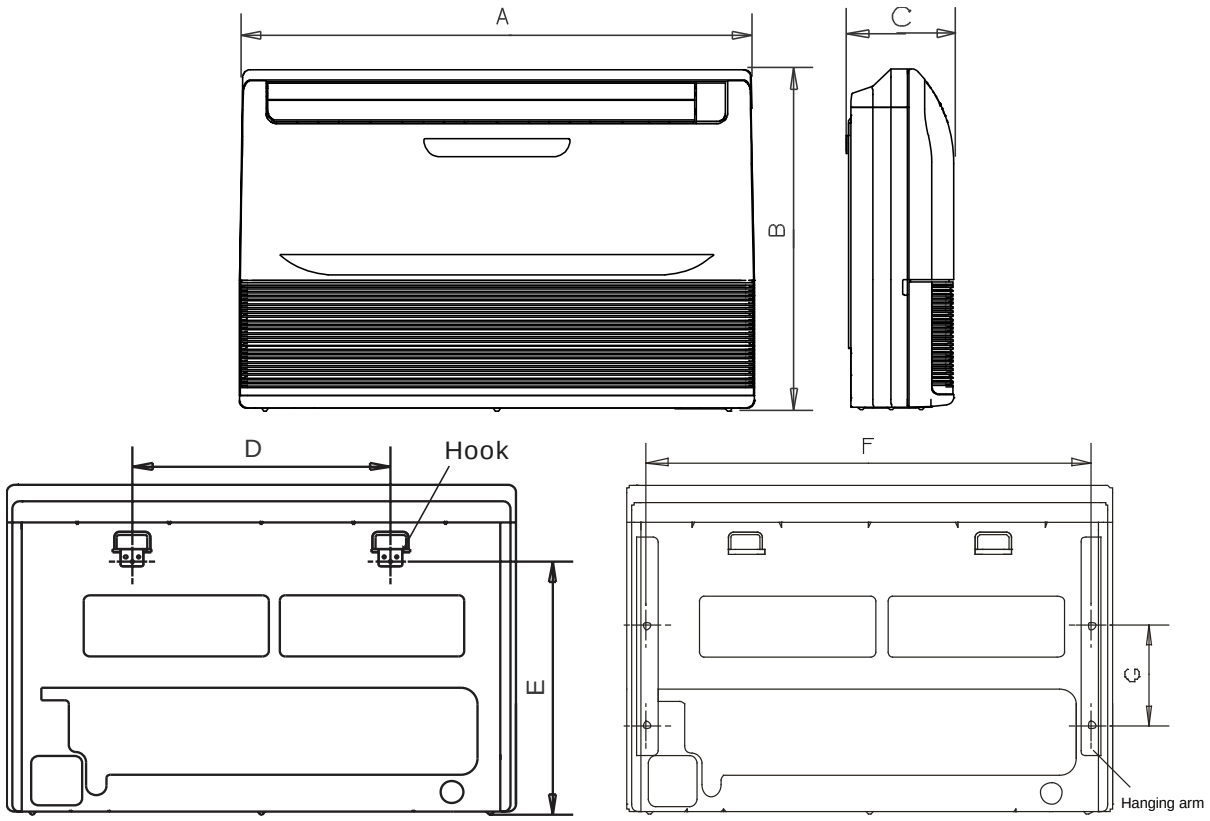

Table 2.2: Ceiling & floor piping connections

Model	Gas pipe (mm)	Liquid pipe (mm)
DATA70ALKS1 **DATA80ALKS1** **DATA120ALKS1** **DATA140ALKS1**	**Φ15.9**	**Φ9.53**

Table 2.1: Ceiling & floor dimensions

Model	Dimensions (mm)						
	A	B	C	D	E	F	G
DATA70ALKS1	990	660	203	505	506	907	200
DATA80ALKS1	1280	660	203	795	506	1195	200
DATA120ALKS1 **DATA140ALKS1**	1670	680	244	1070	450	1542	200

3 Unit Placement

3.1 Placement Considerations

Unit placement should take account of the following considerations:

- Units should not be installed in the following locations:
  - Where exposure to direct radiation from a high-temperature heat source or to interference from a source of electromagnetic radiation may occur.
  - Where dust or dirt may affect heat exchangers.
  - Where exposure to oil or to corrosive or harmful gases, such as acidic or alkaline gases, may occur.
  - Where exposure to salinity may occur, such as seaside locations.
  - Where highly flammable materials are present.
  - Where exposure to oily air may occur, such as a kitchen.
  - Where exposure to very high humidity may occur, such as a laundry.
- Units should be installed in positions where:
  - The ceiling is horizontal and is able to bear the unit's weight.
  - There are no obstructions that could impede the airflow into and out of the unit.
  - The airflow out of the unit can reach throughout the room.
  - There is sufficient space for access during installation, servicing and maintenance.
  - The refrigerant piping and drain piping can be easily connected to the refrigerant piping and drain piping systems.
  - Short-circuit ventilation (where outlet air returns quickly to a unit's air inlet) will not occur.

3.2 Space Requirements

Figure 3.1: Ceiling & floor space requirements (unit: mm)

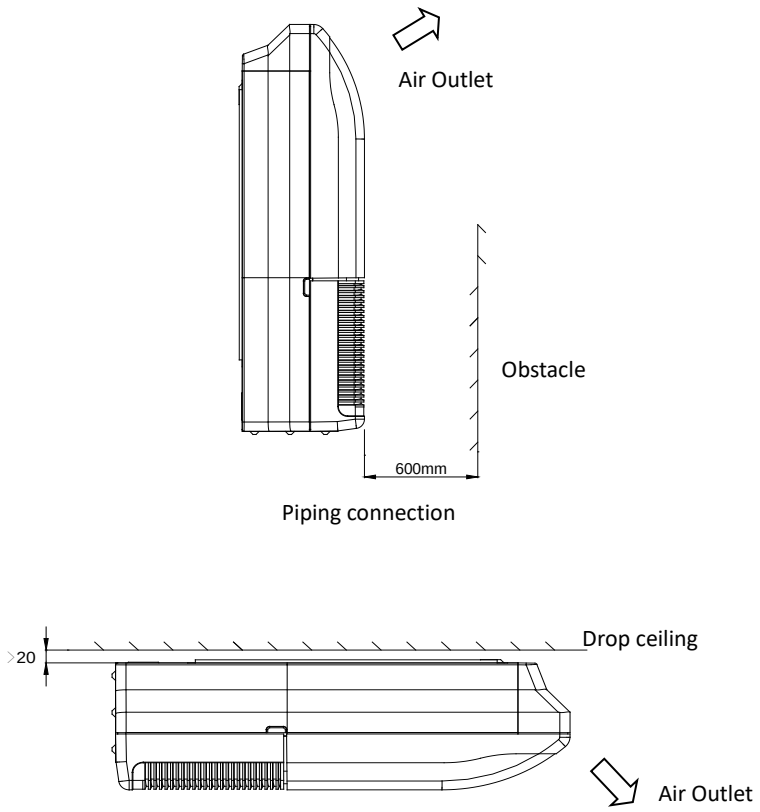

4 Piping Diagram

Figure 4.1: Ceiling & floor piping diagram

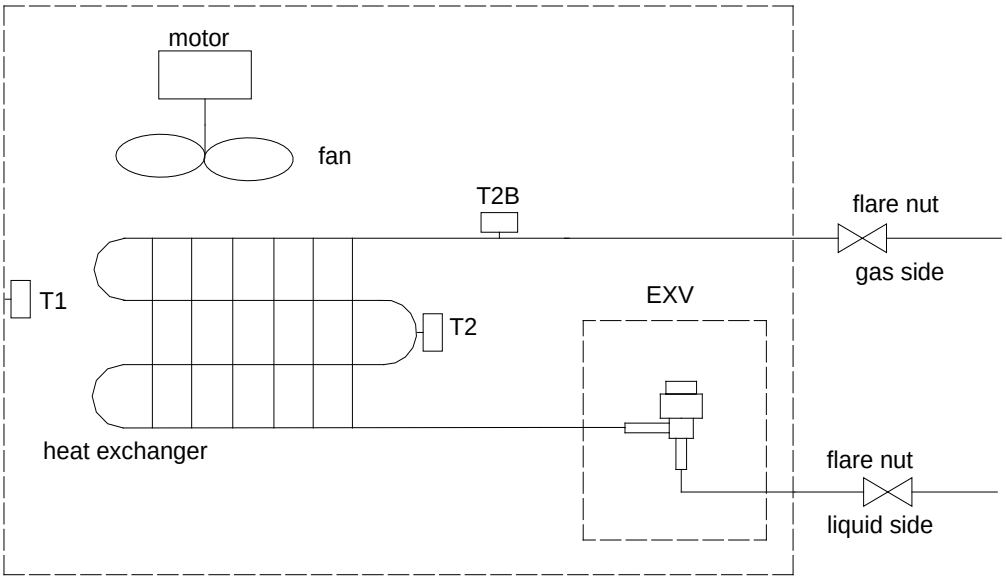

Legend	
T1	Indoor ambient temperature sensor
T2	Indoor heat exchanger mid-point temperature sensor
T2B	Indoor heat exchanger outlet temperature sensor

Notes for installers and service engineers

Caution

- All installation, servicing and maintenance must be carried out by competent and suitably qualified, certified and accredited professionals and in accordance with all applicable legislation.
- Units should be grounded in accordance with all applicable legislation. Metal and other conductive components should be insulated in accordance with all applicable legislation.
- Power supply wiring should be securely fastened at the power supply terminals – loose power supply wiring would represent a fire risk.
- After installation, servicing or maintenance, the electric control box cover should be closed. Failing to close the electric control box cover risks fire or electric shock.
- Switch ENC1 (indoor unit capacity setting) is factory-set and its setting should normally not be changed. The only circumstances in which a switch ENC1 might need to be set in the field is when replacing a main PCB. When replacing a main PCB, ensure that the capacity setting on switch ENC1 on the new PCB is consistent with the unit capacity given on the unit's nameplate.

6 Capacity Tables

6.1 Cooling Capacity Table

Table 6.1: Ceiling & floor cooling capacity tables

Model	Indoor air temp. (°C WB/DB)													
	14/20		16/23		18/26		19/27		20/28		22/30		24/32	
	TC	SC	TC	SC	TC	SC	TC	SC	TC	SC	TC	SC	TC	SC
DATA70ALKS1	6.3	6.0	6.7	6.0	7.0	5.9	7.1	5.8	7.2	5.6	7.4	5.4	7.6	5.2
DATA80ALKS1	7.1	6.8	7.6	6.8	7.9	6.7	8.0	6.5	8.1	6.3	8.3	6.0	8.5	5.8
DATA120ALKS1	9.9	9.5	10.6	9.6	11.1	9.5	11.2	9.2	11.3	8.9	11.6	8.4	11.9	8.1
DATA140ALKS1	12.4	11.9	13.2	11.9	13.8	11.8	14.0	11.4	14.2	11.1	14.5	10.5	14.9	10.1

7 Electrical Characteristics

Table 7.1: Ceiling & floor electrical characteristics

Model	Power supply						Indoor fan motors	
	Hz	Volts	Min. volts	Max. volts	MCA	MFA	Rated motor output (kW)	FLA
DATA70ALKS1	50	220-240	198	264	1.20	15	0.10	0.95
DATA80ALKS1	50	220-240	198	264	1.30	15	0.10	1.10
DATA120ALKS1	50	220-240	198	264	1.70	15	0.10+0.10	0.65+0.65
DATA140ALKS1	50	220-240	198	264	1.70	15	0.10+0.10	0.65+0.65

Abbreviations:
MCA: Minimum Circuit Amps
MFA: Maximum Fuse Amps
FLA: Full Load Amps

8 Sound Levels

8.1 Test Condition

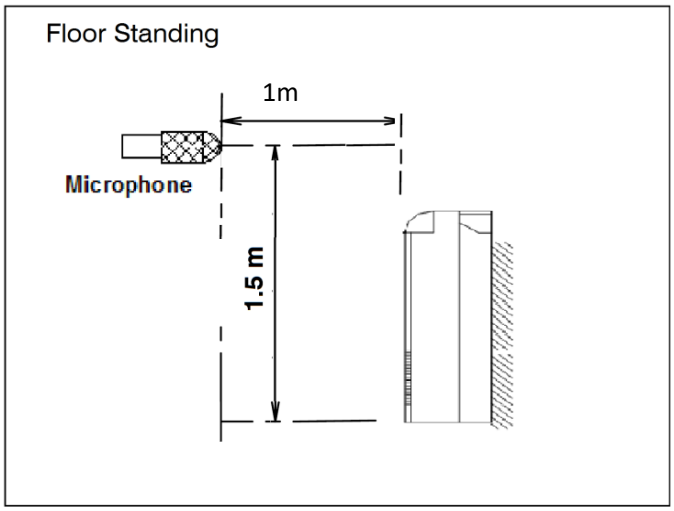

Note:

1, during actual operation, these values are normally somewhat higher as a result of ambient conditions.

2, Anechoic chamber conversion value, measured at a point 1m in front of the unit at a height of 1.5m

8.2 Test Data (Sound Pressure Levels)

Model	Sound level under three speeds of fan (dB(A))		
	H	M	L
DATA70ALKS1	43	41	38
DATA80ALKS1	45	43	40
DATA120ALKS1	47	45	42
DATA140ALKS1	47	45	42

8.3 Octave Band Levels

DATA70ALKS1

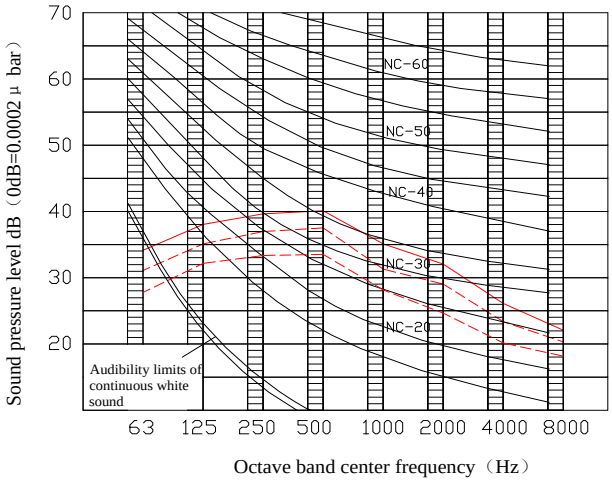

DATA80ALKS1

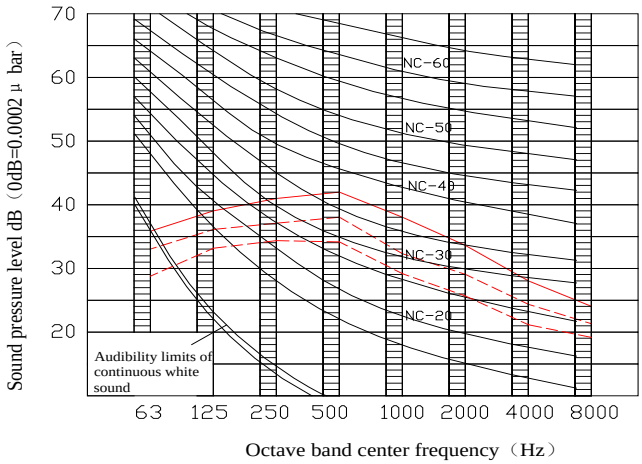
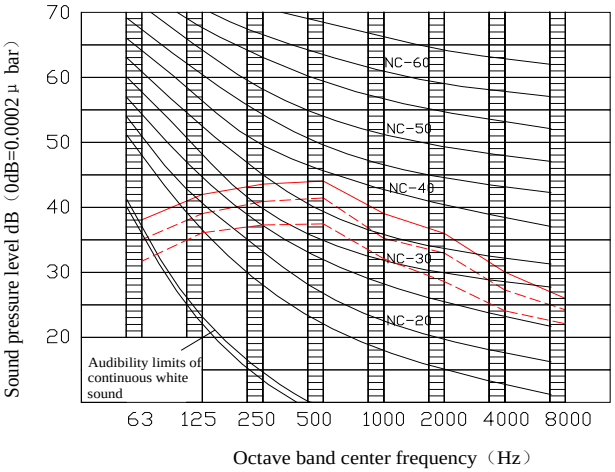
DATA120(140)ALKS1