Service manual

VRV IV+ Heat Pump

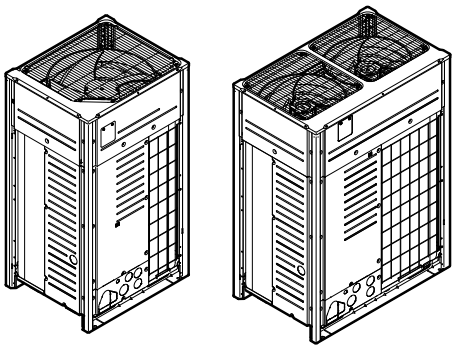

VRV IV+

RYYQ8U7Y1B*
RYYQ10U7Y1B*
RYYQ12U7Y1B*
RYYQ14U7Y1B*
RYYQ16U7Y1B*
RYYQ18U7Y1B*
RYYQ20U7Y1B*

RYMQ8U7/5Y1B*
RYMQ10U7/5Y1B*
RYMQ12U7/5Y1B*
RYMQ14U7/5Y1B*
RYMQ16U7/5Y1B*
RYMQ18U7/5Y1B*
RYMQ20U7/5Y1B*

RXYQ8U7/5Y1B*
RXYQ10U7/5Y1B*
RXYQ12U7/5Y1B*
RXYQ14U7/5Y1B*
RXYQ16U7/5Y1B*
RXYQ18U7/5Y1B*
RXYQ20U7/5Y1B*

RXYTQ8U7/5YF
RXYTQ10U7/5YF
RXYTQ12U7/5YF
RXYTQ14U7/5YF
RXYTQ16U7/5YF

Disclaimer

The present publication is drawn up by way of information only and does not constitute an offer binding upon Daikin Europe N.V.. Daikin Europe N.V. has compiled the content of this publication to the best of its knowledge. No express or implied warranty is given for the completeness, accuracy, reliability or fitness for particular purpose of its content and the products and services presented therein. Specifications are subject to change without prior notice. Daikin Europe N.V. explicitly rejects any liability for any direct or indirect damage, in the broadest sense, arising from or related to the use and/or interpretation of this publication. All content is copyrighted by Daikin Europe N.V..

Version log

Version code	Description	Date
ESIE18-14	Document release	July 2019
ESIE18-14A	See below	May 2021

The following updates have been applied to the Service Manual:
- Unit models RXYTQ8~16U added.

Version code	Description	Date
ESIE18-14B	See below	December 2021

The following updates have been applied to the Service Manual:
- Unit models RXYQ-U5, RYMQ-U5 and RXYTQ-U5 added.

Version code	Description	Date
ESIE18-14C	See below	February 2022

The following updates have been applied to the Service Manual:
- Compressor: To perform an electrical check of the compressor updated for safety reasons.

Table of contents

1 General operation 9

2 Troubleshooting 12

2.1 To access push buttons and 7-segment display 12
2.2 To retrieve error codes and check error history 12
2.2.1 Via service monitoring tool 12
2.2.2 Via the indoor unit remote controller BRC1H 13
2.2.3 Via the outdoor unit 14
2.2.4 Via the wired remote control BRC1E 15
2.2.5 Via the wireless controller BRC4/7 17
2.2.6 Via the wired remote control BRC1D 18
2.3 Error based troubleshooting 20
2.3.1 E1-01 – Outdoor unit main PCB A1P error 20
2.3.2 E1-02 – Outdoor unit main PCB A1P error 20
2.3.3 E2-01-02-03 – Current leak detection 21
2.3.4 E2-06-07-08 – Open circuit on earth leakage detection core 22
2.3.5 E3-01-03-05 – Actuation of high pressure switch 22
2.3.6 E3-02-04-06 – High pressure error 24
2.3.7 E3-07 – High pressure switch reset error 25
2.3.8 E3-13-14-15 – Liquid stop valve check error 26
2.3.9 E3-18 – Actuation of high pressure switch during test run 27
2.3.10 E3-20-21-22 – Jumper open on main PCB 28
2.3.11 E4-01-02-03 – Low pressure error 28
2.3.12 E5-01-02-03 – Compressor overload/Motor Lock Error (M1C) 30
2.3.13 E5-07-08-09 – Compressor overload/Motor Lock Error (M2C) 31
2.3.14 E6-17-19-21 – Inverter overcurrent error 32
2.3.15 E6-18-20-22 – Inverter overcurrent error 34
2.3.16 E7-01-13-25 – Outdoor unit fan motor M1F error 35
2.3.17 E7-02-14-26 – Outdoor unit fan motor M2F error 36
2.3.18 E7-05-17-29 – Outdoor unit fan motor M1F overcurrent error 36
2.3.19 E7-06-18-30 – Outdoor unit fan motor M2F overcurrent error 37
2.3.20 E7-09-21-33 – Fan inverter PCB A4P (integrated power module) overheated 38
2.3.21 E7-10-22-34 – Fan inverter PCB A7P (integrated power module) overheated 39
2.3.22 E9-01-05-08 – Electronic expansion valve Y1E malfunction 40
2.3.23 E9-03-06-09 – Electronic expansion valve Y2E malfunction 41
2.3.24 E9-04-07-10 – Electronic expansion valve Y3E abnormality 42
2.3.25 E9-20-21-22 – Electronic Expansion Valve (Y1E) failure 43
2.3.26 E9-23-24-25 – Electronic expansion valve (Y2E) failure 44
2.3.27 E9-26-27-28 – Electronic expansion valve (Y4E) malfunction 45
2.3.28 E9-48-49-50 – Electronic expansion valve overcurrent error 47
2.3.29 E9-51-52-53 – Electronic expansion valve thermal cutting error 48
2.3.30 E9-54-55-56 – Electronic expansion valve defective circuit 49
2.3.31 F3-01-03-05 – Compressor discharge temperature too high 50
2.3.32 F3-20-21-22 – Compressor body temperature too high 51
2.3.33 F4-01 – Wet operation caution 52
2.3.34 F6-02 – Refrigerant overcharge detection during test-run 54
2.3.35 H3-02-04-06 – Transmission error between main PCB A1P and inverter PCB A3P 55
2.3.36 H3-03-05-07 – Transmission error on inverter PCB A6P 56
2.3.37 H9-01-02-03 – Ambient temperature thermistor R1T abnormality 57
2.3.38 HA-00 – Defrost fail alarm 57
2.3.39 J3-16-22-28 – Discharge thermistor R21T open circuit 58
2.3.40 J3-17-23-29 – Discharge thermistor R21T short circuit 59
2.3.41 J3-18-24-30 – Discharge thermistor R22T open circuit 59
2.3.42 J3-19-25-31 – Discharge thermistor R22T short circuit 60
2.3.43 J3-38-42-44 – Compressor body thermistor R9T open circuit 61
2.3.44 J3-39-43-45 – Compressor body thermistor R9T short circuit 62
2.3.45 J3-47-49-51 – Compressor body thermistor R8T open circuit 62
2.3.46 J3-48-50-52 – Compressor body thermistor R8T short circuit 63
2.3.47 J3-56-57-58 – High discharge temperature 64
2.3.48 J3-59-60-61 – Discharge thermistor crosswired 65
2.3.49 J5-01-03-05 – Compressor suction thermistor R3T malfunction 66
2.3.50 J6-01-02-03 – De–icer thermistor R7T abnormality 66
2.3.51 J7-06-07-08 – Liquid thermistor R5T abnormality 67
2.3.52 J8-01-02-03 – Outdoor heat exchanger thermistor R4T abnormality 68
2.3.53 J9-01-02-03 – Gas thermistor R6T abnormality 69

2.3.54 JA-06-08-10 – High pressure sensor S1NPH abnormality ... 69
2.3.55 JA-07-09-11 – High pressure sensor S1NPH malfunction ... 70
2.3.56 JC-06-08-10 – Low pressure sensor S1NPL abnormality ... 71
2.3.57 JC-07-09-11 – Low pressure sensor S1NPL malfunction ... 72
2.3.58 L1-01-07-11 – Inverter PCB A3P abnormality ... 72
2.3.59 L1-02-08-12 – Inverter PCB A3P current detection primary circuit ... 73
2.3.60 L1-03-09-13 – Inverter PCB A3P current detection secondary circuit ... 74
2.3.61 L1-04-10-14 – Power transistor error on inverter PCB A3P ... 75
2.3.62 L1-05-15-16 – Inverter PCB A3P hardware fault ... 76
2.3.63 L1-17-22-42 – Inverter PCB A6P abnormality ... 77
2.3.64 L1-18-23-43 – Inverter PCB A6P current detection primary circuit ... 78
2.3.65 L1-19-24-44 – Inverter PCB A6P current detection secondary circuit ... 79
2.3.66 L1-20-25-45 – Power transistor error on inverter PCB A6P ... 80
2.3.67 L1-21-26-46 – Inverter PCB A6P hardware fault ... 81
2.3.68 L1-28-32-34 – Fan inverter PCB A4P Eeprom error ... 82
2.3.69 L1-29-33-35 – Fan inverter PCB A7P Eeprom error ... 82
2.3.70 L1-36-38-40 – Inverter PCB A3P Eeprom error ... 83
2.3.71 L1-37-39-41 – Inverter PCB A6P Eeprom error ... 84
2.3.72 L1-47-49-51 – Inverter PCB A3P 16 V DC abnormal ... 84
2.3.73 L1-48-50-52 – Inverter PCB A6P 16 V DC abnormal ... 85
2.3.74 L2-01-02-03 – Power supply abnormality during test run ... 86
2.3.75 L2-04-05-06 – Power supply abnormality during normal operation ... 87
2.3.76 L4-01-02-03 – Inverter PCB A3P high fin temperature ... 88
2.3.77 L4-06-18-20 – Fan inverter PCB A4P high fin temperature ... 89
2.3.78 L4-07-19-21 – Fan inverter PCB A7P high fin temperature ... 90
2.3.79 L4-09-10-11 – Inverter PCB A6P high fin temperature ... 92
2.3.80 L5-03-05-07 – Output overcurrent detection on inverter PCB A3P ... 93
2.3.81 L5-14-15-16 – Output overcurrent detection on inverter PCB A6P ... 94
2.3.82 L8-03-06-07 – Overcurrent on inverter PCB A3P except start-up ... 95
2.3.83 L8-11-12-13 – Overcurrent on inverter PCB A6P except start-up ... 96
2.3.84 L9-01-05-06 – Stall prevention by inverter PCB A3P ... 97
2.3.85 L9-10-11-12 – Stall prevention by inverter PCB A6P ... 98
2.3.86 L9-13-14-15 – Inverter PCB A3P output phase abnormality ... 99
2.3.87 L9-16-17-18 – Inverter PCB A6P output phase abnormality ... 100
2.3.88 LC-01 – Transmission abnormality ... 100
2.3.89 LC-14-15-16 – Transmission abnormality main PCB/inverter PCB A3P ... 101
2.3.90 LC-19-20-21 – Transmission abnormality main PCB/fan inverter PCB A4P ... 102
2.3.91 LC-24-25-26 – Transmission abnormality main PCB/fan inverter PCB A7P ... 103
2.3.92 LC-30-31-32 – Transmission abnormality main PCB/inverter PCB A6P ... 104
2.3.93 P1-01-02-03 – Open phase or unbalanced power supply detection by inverter PCB A3P ... 105
2.3.94 P1-07-08-09 – Open phase or unbalanced power supply detection by inverter PCB A6P ... 106
2.3.95 P2-00 – Refrigerant auto-charge interrupted ... 107
2.3.96 P4-01-04-05 – Fin thermistor abnormality on inverter PCB A3P ... 107
2.3.97 P4-02-15-17 – Fin thermistor abnormality on fan inverter PCB A4P ... 108
2.3.98 P4-03-16-18 – Fin thermistor abnormality on fan inverter PCB A7P ... 109
2.3.99 P4-06-07-08 – Fin thermistor abnormality on inverter PCB A6P ... 110
2.3.100 P8-00 – Freeze-up during refrigerant auto-charge ... 111
2.3.101 P9-00 – Refrigerant auto-charge finished normally ... 112
2.3.102 PA-00 – No refrigerant in refrigerant cylinder during auto-charge ... 112
2.3.103 PE-00 – Refrigerant auto-charge in last stage ... 112
2.3.104 PF-00 – Long test run failed ... 113
2.3.105 PJ-04-05-06 – Capacity setting mismatch for inverter PCB A3P ... 113
2.3.106 PJ-09-15-16 – Capacity setting mismatch for fan inverter PCB A4P ... 114
2.3.107 PJ-10-17-18 – Capacity setting mismatch for fan inverter PCB A7P ... 115
2.3.108 PJ-12-13-14 – Capacity setting mismatch for inverter PCB A6P ... 116
2.3.109 U0-05 – Refrigerant shortage detection ... 116
2.3.110 U0-06 – Refrigerant shortage detection ... 117
2.3.111 U0-08-09-10 – Refrigerant shortage detection by high pressure sensor ... 118
2.3.112 U1-01-05-07 – Reverse phase detection ... 119
2.3.113 U1-04-06-08 – Reverse phase detection ... 120
2.3.114 U2-01-08-11 – Inverter circuit power supply abnormality - inverter PCB A3P abnormal voltage ... 121
2.3.115 U2-02-09-12 – Inverter circuit power supply abnormality - inverter PCB A3P phase loss ... 122
2.3.116 U2-03-10-13 – Inverter circuit power supply abnormality - inverter PCB A3P DC circuit not charging ... 124
2.3.117 U2-22-25-28 – Inverter circuit power supply abnormality - inverter PCB A6P abnormal voltage ... 125
2.3.118 U2-23-26-29 – Inverter circuit power supply abnormality - inverter PCB A6P phase loss ... 126
2.3.119 U2-24-27-30 – Inverter circuit power supply abnormality - inverter PCB A6P DC circuit not charging ... 127
2.3.120 U3-02 – Test run interrupted manually ... 128
2.3.121 U3-03 – Test run not performed yet ... 128
2.3.122 U3-04 – Test run ended abnormally ... 129

2.3.123 U3-05 – Test run aborted on initial transmission ... 130
2.3.124 U3-06 – Test run aborted on normal transmission ... 130
2.3.125 U3-07 – Transmission abnormality on test run ... 131
2.3.126 U3-08 – Transmission abnormality on test run ... 132
2.3.127 U4-01 – Transmission error between indoor units and outdoor unit ... 132
2.3.128 U4-03 – Transmission error between indoor units and system ... 133
2.3.129 U4-15 – Unable to start test run ... 134
2.3.130 U7-01 – Transmission abnormality between systems - DTA104A61,62 error ... 135
2.3.131 U7-02 – Transmission abnormality between systems - DTA104A61,62 error ... 136
2.3.132 U7-03 – Transmission abnormality between main outdoor unit and sub 1 outdoor unit ... 136
2.3.133 U7-04 – Transmission abnormality between main outdoor unit and sub 2 outdoor unit ... 137
2.3.134 U7-05 – Multi system abnormality ... 138
2.3.135 U7-06 – Multi system address abnormality ... 138
2.3.136 U7-07 – More than 3 outdoor units on Q1-Q2 transmission ... 139
2.3.137 U7-11 – Excess indoor units detected on test run ... 139
2.3.138 U7-24 – Duplication of address setting on multiple DTA104A61,62 installation ... 140
2.3.139 U9-01 – Other indoor unit has error ... 140
2.3.140 UA-00 – Combination abnormality ... 141
2.3.141 UA-03 – Combination abnormality - Mix of R22, R407C R410A and R32 type units detected ... 142
2.3.142 UA-16 – Combination abnormality - More than 64 indoor units detected on same system ... 142
2.3.143 UA-17 – Combination abnormality - Local setting abnormality ... 142
2.3.144 UA-18 – Combination abnormality - Outdoor unit not compatible with indoor units (refrigerant type) ... 143
2.3.145 UA-19 – Combination abnormality - Local set alarm ... 143
2.3.146 UA-20 – Combination abnormality - Non-compatible outdoor unit in multi-combination ... 144
2.3.147 UA-21 – Combination abnormality - BPMK units detected ... 144
2.3.148 UA-31 – Combination abnormality - Multi combination abnormality ... 145
2.3.149 UA-38 – Combination abnormality - Altherma hydro unit detected ... 145
2.3.150 UA-39 – Combination abnormality - Incorrect combination ... 146
2.3.151 UA-49 – Combination abnormality - Wrong unit combination ... 146
2.3.152 UF-01 – Wiring and piping mismatch - Auto address inconsistency on F1-F2 transmission ... 146
2.3.153 UF-05 – Wiring and piping mismatch - Stop valves closed or incorrect ... 147
2.3.154 UF-11 – Wiring and piping mismatch - Excess connection ratio ... 148
2.3.155 UH-01 – Auto-address failure ... 149
2.3.156 E-1 – Refrigerant leak check is not possible ... 150
2.3.157 E-2 – Refrigerant leak check cannot be performed - indoor air temperature is out of range ... 150
2.3.158 E-3 – Refrigerant leak check cannot be performed - outdoor air temperature is out of range ... 151
2.3.159 E-4 – Refrigerant leak check is interrupted - too low pressure is detected ... 151
2.3.160 E-5 – Refrigerant leak check cannot be performed - a unit which is not compatible with leak detection function is installed ... 152
2.3.161 NG – Refrigerant leak check function detects refrigerant leak ... 152
2.3.162 OK – Refrigerant leak check function detects no refrigerant leak ... 153
2.3.163 Indoor unit related error codes ... 153
2.3.164 Overview of error codes ... 155
2.4 Symptom based troubleshooting ... 161
2.4.1 Normal operating conditions ... 161
2.4.2 Symptom: The system does not operate ... 161
2.4.3 Symptom: Cool/Heat cannot be changed over ... 162
2.4.4 Symptom: Fan operation is possible, but cooling and heating do not work ... 162
2.4.5 Symptom: The fan speed does not correspond to the setting ... 162
2.4.6 Symptom: The fan direction does not correspond to the setting ... 162
2.4.7 Symptom: White mist comes out of a unit (Indoor unit) ... 162
2.4.8 Symptom: White mist comes out of a unit (Indoor unit, heat exchanger unit) ... 162
2.4.9 Symptom: The user interface reads "U4" or "U5" and stops, but then restarts after a few minutes ... 163
2.4.10 Symptom: Noise of air conditioners (Indoor unit) ... 163
2.4.11 Symptom: Noise of air conditioners (Indoor unit, outdoor unit) ... 163
2.4.12 Symptom: Noise of air conditioners (Outdoor unit) ... 163
2.4.13 Symptom: Dust comes out of the unit ... 163
2.4.14 Symptom: The units can give off odours ... 163
2.4.15 Symptom: The outdoor unit fan does not spin ... 163
2.4.16 Symptom: The display shows "88" ... 164
2.4.17 Symptom: The compressor in the outdoor unit does not stop after a short heating operation ... 164
2.4.18 Symptom: The inside of an outdoor unit is warm even when the unit has stopped ... 164
2.4.19 Symptom: Hot air can be felt when the indoor unit is stopped ... 164
2.4.20 Symptom: Unit operation problems ... 165
2.4.21 Other symptoms ... 167

3 Components ... 169

3.1 4-way valve ... 169
3.1.1 Main 4-way valve ... 169
3.1.2 Sub 4-way valve ... 176

3.2 Compressor ... 182
3.2.1 Checking procedures ... 182
3.2.2 Repair procedures ... 187
3.3 Crankcase heater ... 195
3.3.1 Checking procedures ... 195
3.3.2 Repair procedures ... 197
3.4 Current sensor ... 199
3.4.1 Checking procedures ... 199
3.4.2 Repair procedures ... 200
3.5 Expansion valve ... 201
3.5.1 Checking procedures ... 201
3.5.2 Repair procedures ... 206
3.6 Fan inverter PCB ... 210
3.6.1 Single fan outdoor unit ... 210
3.6.2 Double fan outdoor unit ... 216
3.7 High pressure switch ... 222
3.7.1 Checking procedures ... 222
3.7.2 Repair procedures ... 223
3.8 Inverter PCB ... 225
3.8.1 Checking procedures ... 225
3.8.2 Repair procedures ... 235
3.9 Main PCB ... 243
3.9.1 Checking procedures ... 243
3.9.2 Repair procedures ... 246
3.10 Noise filter PCB ... 252
3.10.1 Checking procedures ... 252
3.10.2 Repair procedures ... 255
3.11 Oil return valve ... 256
3.11.1 Checking procedures ... 256
3.11.2 Repair procedures ... 259
3.12 Outdoor unit fan motor ... 262
3.12.1 Single fan outdoor unit ... 262
3.12.2 Double fan outdoor unit ... 266
3.13 Plate work ... 270
3.13.1 To access the switch box on single fan units ... 270
3.13.2 To access the switch box on double fan units ... 272
3.13.3 To remove the plate work on single fan units ... 273
3.13.4 To remove the plate work on double fan units ... 277
3.14 Reactor ... 281
3.14.1 Checking procedures ... 281
3.14.2 Repair procedures ... 282
3.15 Refrigerant high pressure sensor ... 284
3.15.1 Checking procedures ... 284
3.15.2 Repair procedures ... 286
3.16 Refrigerant low pressure sensor ... 288
3.16.1 Checking procedures ... 288
3.16.2 Repair procedures ... 290
3.17 Thermistors ... 292
3.17.1 Refrigerant side thermistors ... 292
3.17.2 Other thermistors ... 298

4 Third party components ... 299
4.1 Electrical circuit ... 299
4.1.1 Checking procedures ... 299
4.1.2 Repair procedures ... 304
4.2 Refrigerant circuit ... 306
4.2.1 Checking procedures ... 306
4.2.2 Repair procedures ... 311
4.3 External factors ... 316
4.3.1 Checking procedures ... 316

5 Maintenance ... 318
5.1 Maintenance schedule ... 318
5.2 Maintenance procedures for outdoor units ... 319
5.2.1 To check the general status of the unit ... 319
5.2.2 To clean the cover plates ... 320
5.2.3 To clean the outdoor unit heat exchanger ... 320
5.3 Maintenance procedures for indoor units ... 321
5.3.1 To check the general status of the unit ... 321
5.3.2 To clean the cover plates ... 322

5.3.3 To clean the indoor unit heat exchanger ... 322

6 Technical data 324

6.1 Detailed information setting mode ... 324
6.1.1 Detailed information setting mode: Outdoor unit ... 324
6.1.2 Detailed information setting mode: Remote controller ... 324
6.2 Wiring diagram ... 325
6.2.1 Wiring diagram: Outdoor unit ... 325
6.3 Piping diagram ... 330
6.3.1 Piping diagram: Outdoor unit ... 330
6.3.2 Refrigerant flow diagram ... 342
6.4 Component overview ... 355
6.4.1 Component overview: RXYQ8~12U + RXYTQ8U units ... 355
6.4.2 Component overview: RXYQ14~16U + RXYTQ10~16U units ... 357
6.4.3 Component overview: RXYQ18~20U units ... 359
6.4.4 Component overview: RYMQ8~12U units ... 361
6.4.5 Component overview: RYMQ14~16U units ... 363
6.4.6 Component overview: RYMQ18~20U units ... 365
6.4.7 Component overview: RYYQ8~12U units ... 367
6.4.8 Component overview: RYYQ14~16U units ... 369
6.4.9 Component overview: RYYQ18~20U units ... 371
6.5 Switchbox overview ... 373
6.5.1 Single fan units ... 373
6.5.2 Double fan units ... 373
6.6 Safety devices ... 374
6.7 Field information report ... 376
6.8 Service tools ... 379
6.9 Field settings ... 380
6.9.1 To access mode 1 or 2 ... 380
6.9.2 To use mode 1 ... 380
6.9.3 To use mode 2 ... 381
6.9.4 Mode 1: Field settings ... 383
6.9.5 Mode 2: Field settings ... 386
6.9.6 Overview of field settings for indoor units ... 390
6.9.7 Field settings as per type of indoor unit ... 394

1 General operation

The VRV IV+ HP outdoor unit is a heat pump used for cooling or heating in commercial applications.

Outdoor units

The outdoor unit consists of:

- 1 or 2 inverter compressor(s)
- A switchbox containing necessary PCBs
- A liquid cooling circuit to cool down inverter switchbox
- An air cooled heat-exchanger
- 3 expansion valves (main, sub-cool and liquid cooling)
- 1 or 2 fan motor(s)
- Two refrigerant piping connections: gas and liquid.

There are 4 types of outdoor units:

- RXYQ-U: VRV IV+ HP, non-continuous Heating
- RXYTQ-U: VRV IV+ HA (high ambient), non-continuous Heating
- RYYQ-U: VRV IV+ HP, continuous Heating
- RYMQ-U: VRV IV+ HP, continuous Heating

RYYQ-U units can ONLY be used as stand-alone units and not in multi combinations.

RYMQ-U units can ONLY be used in multi combinations and not as stand-alone units.

Non-continuous heating and continuous heating type units CANNOT be used together in multi combination.

VRV IV+ HP U-series and T-series cannot be used together in multi combination.

Up to 3 modules of VRV IV+ HP outdoor units can be connected using refnet BHFQ22P.

Field piping must be thermally insulated copper piping.

To split the refrigerant circuit between outdoor units and indoor units (expansion valve kit in case air handling unit and BP branch selector box in case Split or Sky air units), KHRQ22M refnet branches are used.

The VRV IV+ HP comes in two different types of outdoor unit casing:

Small casing	Large casing
RXYQ8~12	RXYQ14~20
RYYQ8~12	RYYQ14~20
RYMQ8~12	RYMQ14~20
RXYTQ8	RXYTQ10~16

Heating mode

The compressor capacity step is defined by the condensing temperature, which is calculated through the high pressure sensor read-out.

In normal operation, the outdoor unit fan is set to "fan step 7" for nominal fan speed.

In defrost or oil return operation the heat exchanger functions as a condenser, while its fan motor(s) and the fan motors of the operational VRV indoor units are stopped.

Cooling mode

The compressor capacity step is defined by the evaporation temperature, which is calculated through the low pressure sensor read-out.

In normal operation the fan step is defined by the condensing temperature, which is calculated through the high pressure sensor read-out and ambient temperature thermistor read-out.

Indoor Units

The below illustration does not reflect allowed combinations or compatibility. The intention is to give an overview on piping installation for different types of units.

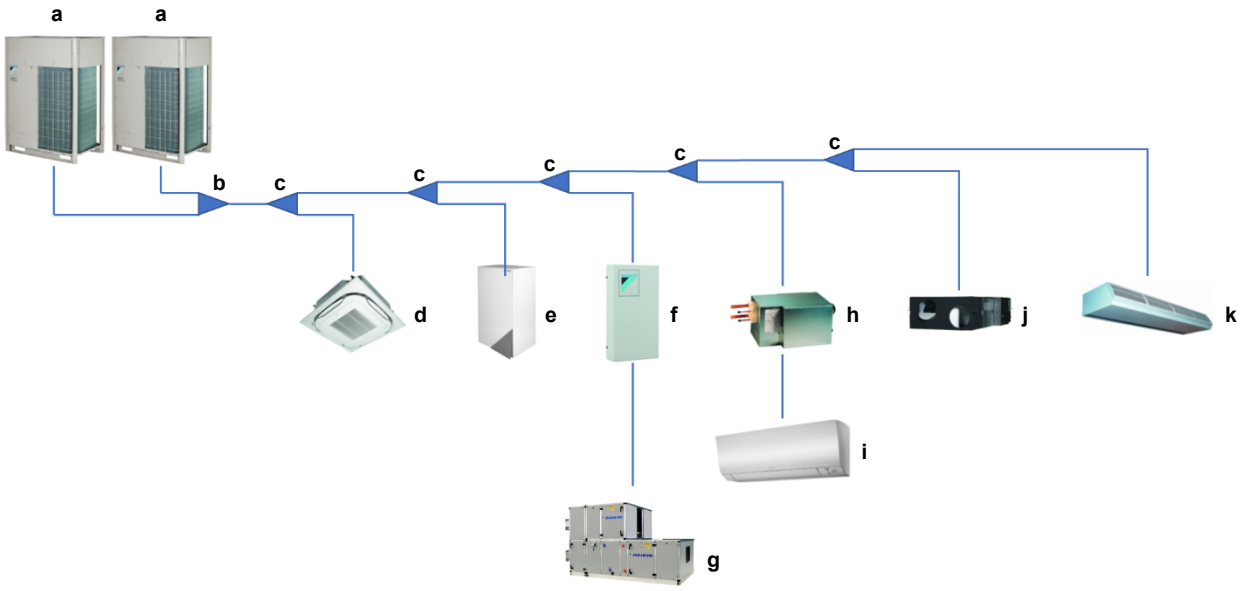

- **a** VRV IV+ HP outdoor unit
- **b** Refnet BHFQ22P for Outdoor multi connection
- **c** Refnet KHRQ22M
- **d** VRV indoor unit
- **e** Low temperature Hydrobox[a]
- **f** Expansion valve kit
- **g** Air handling unit
- **h** Branch selector box (BP unit is mandatory if Split/Sky air unit is to be connected)[a]
- **i** Split/Sky air unit
- **j** Heat reclaim ventilator with DX coil
- **k** Air curtain

VRV systems have combination limits for different types of indoor units and also limits for piping length and connection ratio for each indoor unit combination pattern. Refer to the Engineering Databook.

The list below is only for reference of compatible units. Always refer to Engineering Databook for compatibility.

Round flow cassette FXFQ	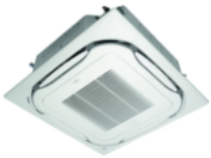	Floor standing FXLQ	
Fully flat cassette FXZQ	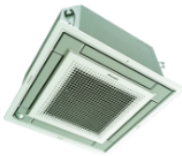	AHU kit EKEXV + EKEQM - EKEQF	
2 Way cassette FXCQ		Low temperature Hydrobox - HXY[a]	
Corner cassette FXKQ		Heat recovery ventilator VKM	
Concealed ceiling FXDQ	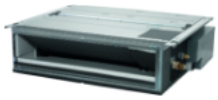	Air curtain CYVS, CYVM, CYVL	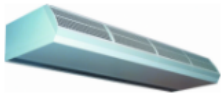
Concealed ceiling with medium ESP - FXSQ	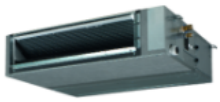	Concealed ceiling with high ESP - FXMQ	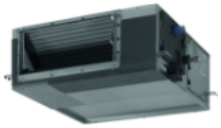
Wall mounted FXAQ	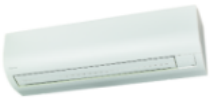	Ceiling suspended FXHQ	
4 Way ceiling suspended – FXUQ		Concealed floor standing - FXNQ	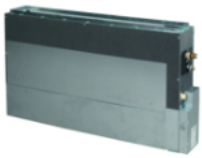
Branch selector box BPMKS[a]	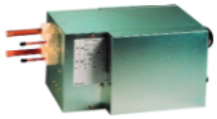		

[a] NOT compatible with VRV IV+ HA units.

2 Troubleshooting

2.1 To access push buttons and 7-segment display

1 Remove the service plate, see "3.13 Plate work" [▶ 270].

Result: The push buttons and 7-segment display are located on A1P behind the service plate.

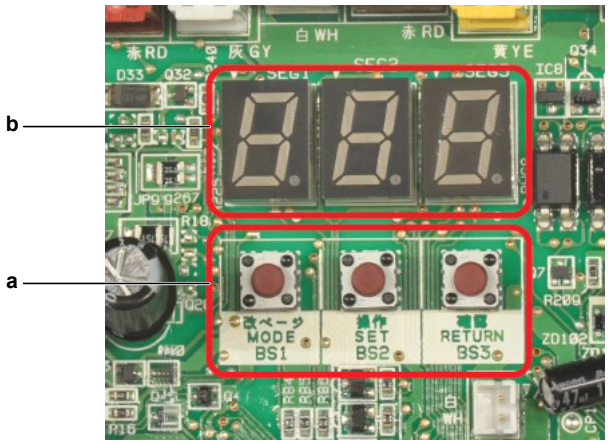

a Push buttons
b 7-segment display

2 Active error code is highlighted on the 7-segment display.

2.2 To retrieve error codes and check error history

2.2.1 Via service monitoring tool

With the service monitoring tool, it is possible to monitor not only error codes but also some common retries and stepping down controls:

- Unit error
- Error code
- High pressure retry
- Low pressure retry
- Discharge pipe retry
- Inverter retry
- High pressure stepping down control
- Low pressure stepping down control
- Over current stepping down control
- Fin temperature stepping down control
- Compressor discharging stepping down control

2.2.2 Via the indoor unit remote controller BRC1H

> **INFORMATION**
>
> Images are in English and for reference ONLY. For more details on the Madoka Assistant please refer to the BRC1H training course material which is available on the Daikin Business Portal.

To retrieve the error code

To indicate a system error, the controller displays ⚠ on the messages zone of the home screen.

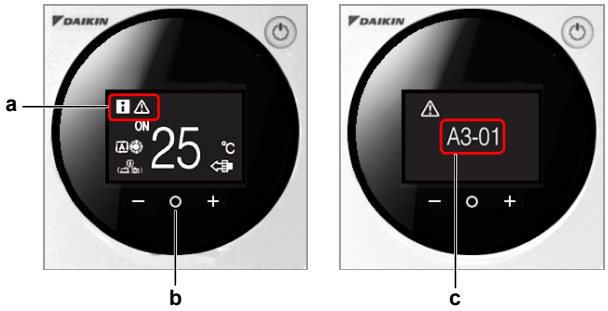

- **a** Messages zone
- **b** Middle button
- **c** Error screen

1. Press the middle button to enter the main menu from the home screen.

   Result: An error screen is displayed.

2. Press the middle button to return to the home screen.

Active error codes are also accessible through the Madoka Assistant for BRC1H.

The active error is shown on the home screen.

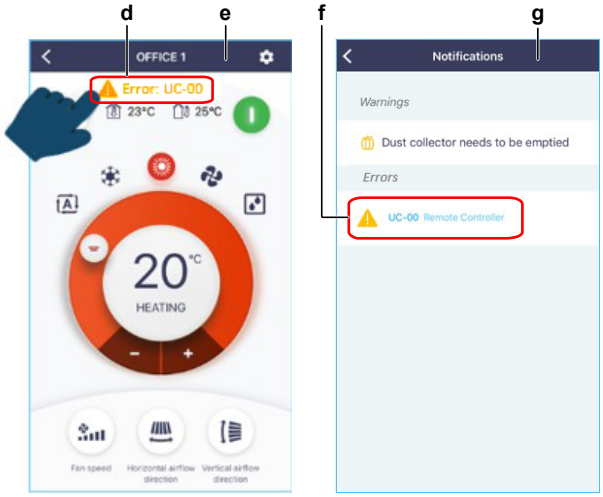

- **d** Active error
- **e** Home screen
- **f** Error(s) details
- **g** Notifications screen

3. Tap the active error.

   Result: The detail(s) of the error(s) are shown on the Notifications screen.

To check the error history

To check the error history with the Madoka Assistant for BRC1H:

#	Action	Image for reference	Result
1	Tap the settings icon.	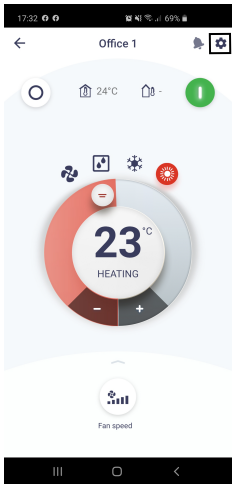	The Unit settings screen is displayed.
2	Tap Errors and warnings.	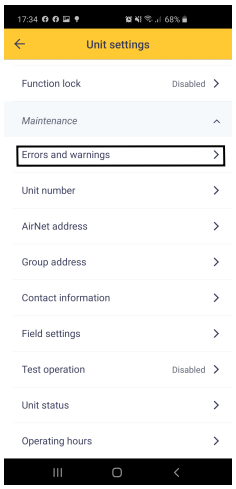	The Errors and warnings screen is displayed.
3	Tap Error history.	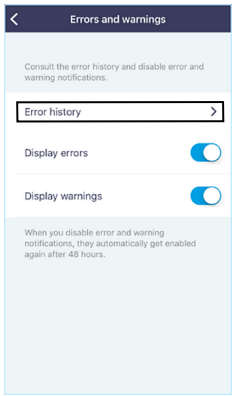 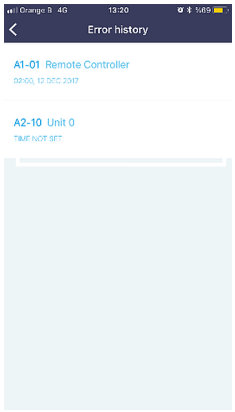 The Error history screen is displayed.

2.2.3 Via the outdoor unit

Error codes and/or retry descriptions are accessible on “Mode 1: Monitor Mode”.

The table below shows which setting shows the error codes that led to an outdoor unit forced stop and/or retry.

- When an error is generated, the unit performs a forced off until the error is retrieved.

- On retry, the system attempts to stay in operation. Depending on the type of root cause, after a certain amount of retry attempts, the unit generates an error. Retry cause is also visible as an item on the service monitoring tool.

Mode	Setting	Description
Mode 1: Monitor mode	17	Error code last forced off
	18	Error code 2nd last forced off
	19	Error code 3rd last forced off
	23	Error code last retry
	24	Error code 2nd last retry
	25	Error code 3rd last retry

Please follow the procedure described below to access the regarding error code for outdoor unit forced stop and/or retry description:

Action	Result	Display
Make sure the 7-segment display indication is as during normal operation.		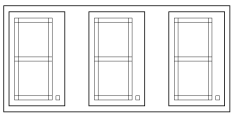
To enter “Mode 1”, push the (BS1) button one time	Mode 1 is accessed.	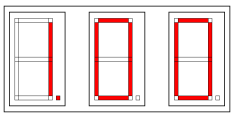
Push the (BS2) button as many times as the setting you want to go to.	The setting is accessed (e.g. 17, Error code last forced off)	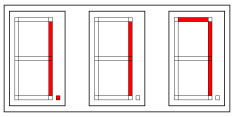
Press the RETURN (BS3) Button.	Malfunction/Retry item will appear on display.	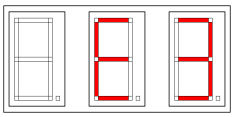
Press the SET (BS2) Button.	Detailed Malfunction/ Retry sub-code will appear on display.	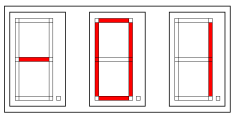
Press SET (BS2) once again to return to main Malfunction/Retry display.	Main Malfunction/Retry item will appear on display.	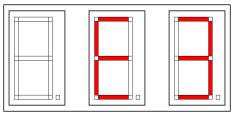
Press the RETURN (BS3) Button to return to Home Screen for “Monitoring Mode”.	Home Screen for “Monitoring Mode” will appear on display.	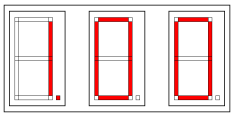
Press the MODE (BS1) Button to return to “Normal Mode”.	Back in normal mode.	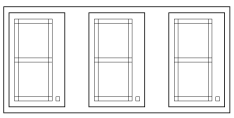

2.2.4 Via the wired remote control BRC1E

INFORMATION

Images are in English and for reference ONLY. For more details on the BRC1E please refer to the user manual.

To retrieve the error code

In case of an error or warning, the operation lamp on the ON/OFF button blinks and an error message or warning is displayed at the bottom of the screen.

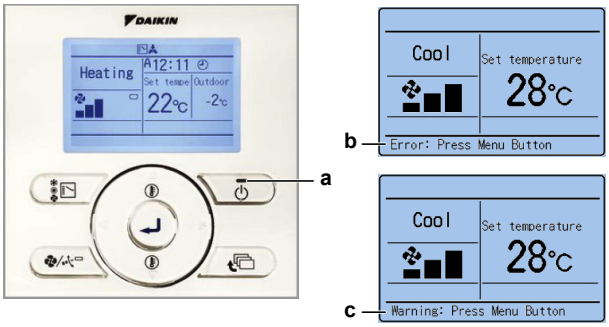

a Operation lamp on the ON/OFF button
b Error message
c Warning

#	Action	Result
1	Press. 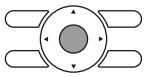	The error code appears on the screen. The content of the error/ warning is displayed. 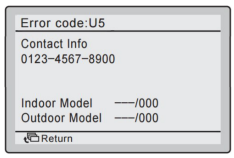

To check the error history

#	Action	Result
1	Go to the basic screen.	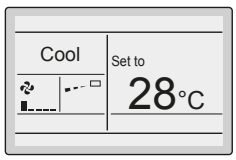
2	Press at least 4 seconds while the backlight of the screen is lit. 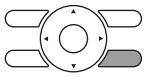	The Service Settings screen is displayed.
3	Select Error History 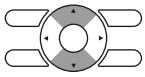	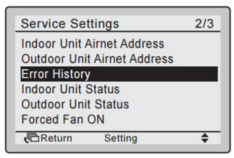
4	Press. 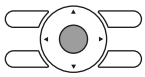	The Error History screen is displayed.
5	Select RC Error History or Indoor Unit Error History. 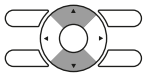	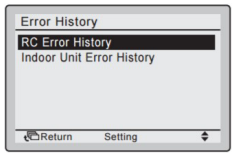

#	Action	Result
6	Press. 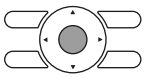	▪ The RC Error History screen shows error history for all units in case of group control ▪ The Indoor Unit Error History screen shows error history of the selected indoor unit 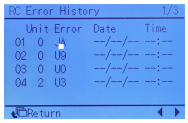 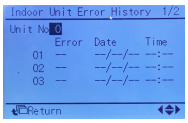

2.2.5 Via the wireless controller BRC4/7

To retrieve the error code

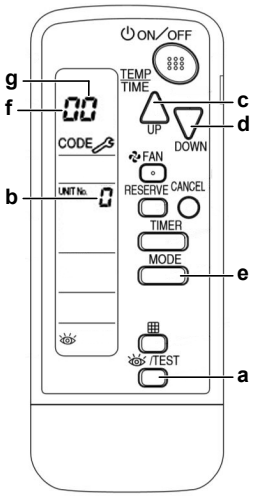

- **a** INSPECTION/TEST button
- **b** Unit No.
- **c** UP button
- **d** DOWN button
- **e** MODE button
- **f** Left digit
- **g** Right digit

1 Press and hold INSPECTION/TEST button for 5 seconds.

Result: The "unit indication" is displayed on screen and Unit No. is displayed as "0", blinking.

2 Set the Unit No. via UP/DOWN buttons until a buzzer sound* is generated from the indoor unit.

Result: *Possible buzzer sounds:

- 3 short beeps; conduct all items of the following procedure.
- 1 short beep; conduct steps 3 and 4. Continue the operation in step 4 until the buzzer sounds continuously.
- Continuous buzzer; indicates the error code is confirmed.

3 Press the MODE button.

Result: The left digit of the error code on display will blink.

4 Press UP/DOWN buttons to change the left digit of the error code.

Result: The left digit changes as indicated below.

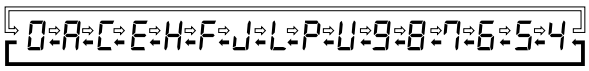

⇨ UP button
⬅ DOWN button

5 Continue to change until the matching buzzer sound** is generated.

Result: **Possible buzzer sounds:

- Continuous buzzer; both digits match with the error code.
- 2 short beeps; left digit matches with the error code.
- 1 short beep; right digit matches with the error code.

6 Press the MODE button.

Result: The right digit of the error code on display will blink.

7 Press UP/DOWN buttons to change the right digit of the error code.

Result: The right digit changes as indicated below.

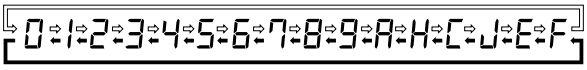

⇨ UP button
⬅ DOWN button

8 Continue to change until the matching buzzer sound*** is generated.

Result: ***Possible buzzer sounds:

- Continuous buzzer; both digits match with the error code.
- 2 short beeps; left digit matches with the error code.
- 1 short beep; right digit matches with the error code.

To check the error history

INFORMATION

It is not possible to acces the error history with the wireless controller BRC4/7.

2.2.6 Via the wired remote control BRC1D

To retrieve the error code

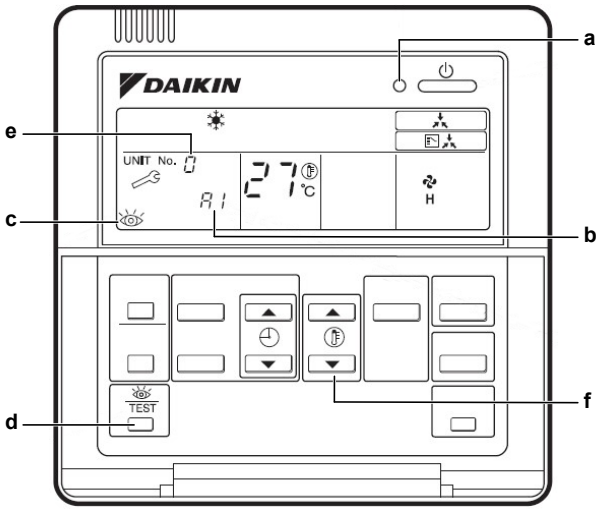

a Remote controller's operation LED
b Error code

c Inspection display
d TEST button
e Unit No.
f Temperature set button

If operation stops due to a malfunction, the remote controller's operation LED will blink and an error code will be displayed.

The error code will stay available at inspection mode even after forced off operation or after the error is reset.

The inspection display and error code blink while an error is active.

To access the error code while in normal operation; follow the procedure below:

1. Press TEST button once.

   Result: Error code for corresponding Unit No will be displayed.

2. Press TEST button.

   Result: Indoor unit model code will be displayed.

3. Press TEST button.

   Result: Outdoor unit model code will be displayed.

4. Press TEST button.

   Result: TEST operation will be displayed.

5. Press TEST button for the last time to return to home screen.

   Result: The home screen appears.

To check the error history

To check the malfunction history, you will need to access Mode 40 on the BRC1D. Mode 40 stands for malfunction history display.

1. While in home screen, press TEST button for 5 seconds.

   Result: Field settings mode is accessed.

2. While in field settings mode, press TEST button for 5 seconds.

   Result: Mode 40 is accessed.

3. Push the temperature set button to change the History No. No 1 stands for the latest error.

   Result: The History No. and error code are displayed.

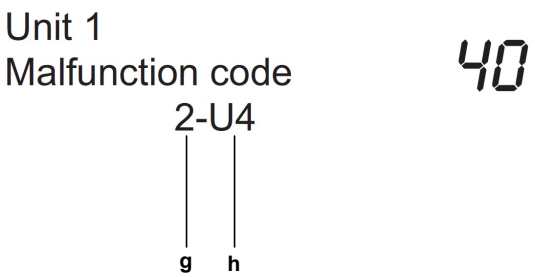

g History No.
h Error code

4. Press TEST button to return to the home screen.

2.3 Error based troubleshooting

2.3.1 E1-01 – Outdoor unit main PCB A1P error

Trigger	Effect	Reset
Main PCB fails reading/ writing memory (EEPROM error).	Unit will stop operating.	Manual reset via user interface.

To solve the error code

> **INFORMATION**
> It is recommended to perform the checks in the listed order.

1. Perform a check of the main PCB. See "3.9 Main PCB" [▸ 243].

   Possible cause: Faulty main PCB.

2. Check if the power supply is compliant with the regulations. See "4.1 Electrical circuit" [▸ 299].

   Possible cause:
   - Faulty or disturbance of the power supply (power supply MUST be within range of nominal operating voltage ±4%),
   - Power drop,
   - Short circuit.

3. Check the F1-F2 transmission line between the indoor units and outdoor unit. See "4.1 Electrical circuit" [▸ 299].

   Possible cause: Faulty or interruption in transmission line between indoor units and outdoor unit.

4. Perform a power reset. If the error disappears and is raised again after a while, check for the presence of an external source causing electrical noise. See "4.3 External factors" [▸ 316].

   Possible cause: External source may cause interference.

> **INFORMATION**
> If all procedures listed above have been performed and the problem is still present, contact the helpdesk.

2.3.2 E1-02 – Outdoor unit main PCB A1P error

Trigger	Effect	Reset
Defected main PCB.	Unit will stop operating.	Manual reset via user interface.

To solve the error code

1. Perform a check of the main PCB. See "3.9 Main PCB" [▸ 243].

   Possible cause: Faulty main PCB.

> **INFORMATION**
> If all procedures listed above have been performed and the problem is still present, contact the helpdesk.

2.3.3 E2-01-02-03 – Current leak detection

Main error code	Sub error code	Unit
E2	01	Main
	02	Sub 1
	03	Sub 2

INFORMATION

Main, Sub 1 and Sub 2 indications are relevant in multiple outdoor unit configurations. Main outdoor unit is the unit to which F1-F2 IN transmission line is connected. Main, Sub 1 and Sub 2 outdoor units can be identified by field setting 1-00.

Trigger	Effect	Reset
Main PCB detects earth leakage through current sensor >safety value, see "6.6 Safety devices" [▸ 374].	Unit will stop operating.	Manual reset via user interface.

To solve the error code

INFORMATION

It is recommended to perform the checks in the listed order.

1. Perform a check of the current sensor. See "3.4 Current sensor" [▸ 199].

   Possible cause: Faulty current sensor.

2. Check if the power supply is compliant with the regulations. See "4.1 Electrical circuit" [▸ 299].

   Possible cause:
   - Faulty or disturbance of the power supply (power supply MUST be within range of nominal operating voltage ±4%),
   - Power drop,
   - Short circuit.

3. Perform a check of the main PCB. See "3.9 Main PCB" [▸ 243].

   Possible cause: Faulty main PCB.

4. Using a megger device, check the solenoid valve coils, 4-way valve coil, fan motors and compressors if any earth leakage is found. Replace the component(s) that generate earth leakage.

5. Check if the refrigerant circuit is correctly charged. See "4.2 Refrigerant circuit" [▸ 306].

   Possible cause: Refrigerant overcharge.

6. Check for the presence of humidity in the refrigerant circuit. See "4.2 Refrigerant circuit" [▸ 306].

   Possible cause: Humidity in the refrigerant circuit.

INFORMATION

If all procedures listed above have been performed and the problem is still present, contact the helpdesk.

2.3.4 E2-06-07-08 – Open circuit on earth leakage detection core

Main error code	Sub error code	Unit
E2	06	Main
	07	Sub 1
	08	Sub 2

INFORMATION

Main, Sub 1 and Sub 2 indications are relevant in multiple outdoor unit configurations. Main outdoor unit is the unit to which F1-F2 IN transmission line is connected. Main, Sub 1 and Sub 2 outdoor units can be identified by field setting 1-00.

Trigger	Effect	Reset
Main PCB detects open circuit on connector X101A.	Unit will stop operating.	Manual reset via user interface.

To solve the error code

INFORMATION

It is recommended to perform the checks in the listed order.

1. Check that connector X101A is correctly connected to the main PCB. See "3.9 Main PCB" [▸ 243].

   Possible cause: Open circuit on connector X101A.

2. Perform a check of the current sensor. See "3.4 Current sensor" [▸ 199].

   Possible cause: Faulty current sensor.

3. Perform a check of the main PCB. See "3.9 Main PCB" [▸ 243].

   Possible cause: Faulty main PCB.

INFORMATION

If all procedures listed above have been performed and the problem is still present, contact the helpdesk.

2.3.5 E3-01-03-05 – Actuation of high pressure switch

Main error code	Sub error code	Unit
E3	01	Main
	03	Sub 1
	05	Sub 2

INFORMATION

Main, Sub 1 and Sub 2 indications are relevant in multiple outdoor unit configurations. Main outdoor unit is the unit to which F1-F2 IN transmission line is connected. Main, Sub 1 and Sub 2 outdoor units can be identified by field setting 1-00.

Trigger	Effect	Reset
High pressure switch opens due to high pressure >safety value, "6.6 Safety devices" [▸ 374].	Unit will stop operating.	If field setting 2-15=1 (default): When pressure drops below the reset value, via the indoor unit remote controller, cycle OFF & ON.
		If field setting 2-15=0: When pressure drops below the reset value, press BS3 on main PCB on outdoor unit, and then via indoor unit remote controller, cycle OFF & ON.

To solve the error code

INFORMATION

It is recommended to perform the checks in the listed order.

1 Check that all stop valves of the refrigerant circuit are open. See "4.2 Refrigerant circuit" [▸ 306].

Possible cause: Closed stop valve in the refrigerant circuit.

2 Check the required space around the outdoor unit heat exchanger. See "4.3 External factors" [▸ 316].

Possible cause: Insufficient air flow or air by-pass due to required space specifications not met.

3 Clean the outdoor heat exchanger. See "5 Maintenance" [▸ 318].

Possible cause: Dirty outdoor heat exchanger.

4 Perform a check of the high pressure switch. See "3.7 High pressure switch" [▸ 222].

Possible cause: Faulty high pressure switch.

5 Check if the refrigerant circuit is correctly charged. See "4.2 Refrigerant circuit" [▸ 306].

Possible cause: Refrigerant overcharge.

6 Check for the presence of non-condensables and/or humidity in the refrigerant circuit. See "4.2 Refrigerant circuit" [▸ 306].

Possible cause: Non-condensables and/or humidity in the refrigerant circuit.

7 Check if the refrigerant circuit is clogged. See "4.2 Refrigerant circuit" [▸ 306].

Possible cause: Clogged refrigerant circuit.

8 Perform a check of the condenser side expansion valve. See "3.5 Expansion valve" [▸ 201].

Possible cause: Faulty condenser side expansion valve.

9 Perform a check of the main PCB. See "3.9 Main PCB" [▸ 243].

Possible cause: Faulty main PCB.

INFORMATION

If all procedures listed above have been performed and the problem is still present, contact the helpdesk.

2.3.6 E3-02-04-06 – High pressure error

Main error code	Sub error code	Unit
E3	02	Main
	04	Sub 1
	06	Sub 2

INFORMATION

Main, Sub 1 and Sub 2 indications are relevant in multiple outdoor unit configurations. Main outdoor unit is the unit to which F1-F2 IN transmission line is connected. Main, Sub 1 and Sub 2 outdoor units can be identified by field setting 1-00.

Trigger	Effect	Reset
High pressure control (by sensor) active due to pressure >safety value certain times within certain minutes, see "6.6 Safety devices" [▸ 374].	Unit will stop operating.	If field setting 2-15=1 (default): Via the indoor unit remote controller, cycle OFF & ON.
		If field setting 2-15=0: Press BS3 on main PCB on outdoor unit, and then via indoor unit remote controller, cycle OFF & ON.

To solve the error code

INFORMATION

It is recommended to perform the checks in the listed order.

1. Check that all stop valves of the refrigerant circuit are open. See "4.2 Refrigerant circuit" [▸ 306].

   Possible cause: Closed stop valve in the refrigerant circuit.

2. Check the required space around the outdoor unit heat exchanger. See "4.3 External factors" [▸ 316].

   Possible cause: Insufficient air flow or air by-pass due to required space specifications not met.

3. Clean the outdoor heat exchanger. See "5 Maintenance" [▸ 318].

   Possible cause: Dirty outdoor heat exchanger.

4. Perform a check of the refrigerant high pressure sensor. See "3.15 Refrigerant high pressure sensor" [▸ 284].

   Possible cause: Faulty refrigerant high pressure sensor.

5. Check if the refrigerant circuit is correctly charged. See "4.2 Refrigerant circuit" [▸ 306].

Possible cause: Refrigerant overcharge.

6 Check for the presence of non-condensables and/or humidity in the refrigerant circuit. See "4.2 Refrigerant circuit" [▶ 306].

Possible cause: Non-condensables and/or humidity in the refrigerant circuit.

7 Check if the refrigerant circuit is clogged. See "4.2 Refrigerant circuit" [▶ 306].

Possible cause: Clogged refrigerant circuit.

8 Perform a check of the condenser side expansion valve. See "3.5 Expansion valve" [▶ 201].

Possible cause: Faulty condenser side expansion valve.

9 Perform a check of the main PCB. See "3.9 Main PCB" [▶ 243].

Possible cause: Faulty main PCB.

> **INFORMATION**
> If all procedures listed above have been performed and the problem is still present, contact the helpdesk.

2.3.7 E3-07 – High pressure switch reset error

Trigger	Effect	Reset
High pressure switch did not reset and it stays activated.	Unit will stop operating.	If field setting 2-15=1 (default): Via the indoor unit remote controller, cycle OFF & ON.
		If field setting 2-15=0: Press BS3 on main PCB on outdoor unit, and then via indoor unit remote controller, cycle OFF & ON.

To solve the error code

> **INFORMATION**
> It is recommended to perform the checks in the listed order.

1 Check that all stop valves of the refrigerant circuit are open. See "4.2 Refrigerant circuit" [▶ 306].

Possible cause: Closed stop valve in the refrigerant circuit.

2 Perform a check of the high pressure switch. See "3.7 High pressure switch" [▶ 222].

Possible cause: Faulty high pressure switch.

3 Perform a check of the main PCB. See "3.9 Main PCB" [▶ 243].

Possible cause: Faulty main PCB.

> **INFORMATION**
> If all procedures listed above have been performed and the problem is still present, contact the helpdesk.

2.3.8 E3-13-14-15 – Liquid stop valve check error

Main error code	Sub error code	Unit
E3	13	Main
	14	Sub 1
	15	Sub 2

INFORMATION

Main, Sub 1 and Sub 2 indications are relevant in multiple outdoor unit configurations. Main outdoor unit is the unit to which F1-F2 IN transmission line is connected. Main, Sub 1 and Sub 2 outdoor units can be identified by field setting 1-00.

Trigger	Effect	Reset
Pressure builds up quickly on test run operation.	Unit will stop test run.	Eliminate the cause, repeat test operation procedure.

To solve the error code

INFORMATION

It is recommended to perform the checks in the listed order.

1. Check that all stop valves of the refrigerant circuit are open. See "4.2 Refrigerant circuit" [▸ 306].

   Possible cause: Closed stop valve in the refrigerant circuit.

2. Perform a check of the refrigerant high pressure sensor. See "3.15 Refrigerant high pressure sensor" [▸ 284].

   Possible cause: Faulty refrigerant high pressure sensor.

3. Check if the refrigerant circuit is correctly charged. See "4.2 Refrigerant circuit" [▸ 306].

   Possible cause: Refrigerant overcharge.

4. Check for the presence of non-condensables and/or humidity in the refrigerant circuit. See "4.2 Refrigerant circuit" [▸ 306].

   Possible cause: Non-condensables and/or humidity in the refrigerant circuit.

5. Check if the refrigerant circuit is clogged. See "4.2 Refrigerant circuit" [▸ 306].

   Possible cause: Clogged refrigerant circuit.

6. Perform a check of the condenser side expansion valve. See "3.5 Expansion valve" [▸ 201].

   Possible cause: Faulty condenser side expansion valve.

7. Perform a check of the main PCB. See "3.9 Main PCB" [▸ 243].

   Possible cause: Faulty main PCB.

INFORMATION

If all procedures listed above have been performed and the problem is still present, contact the helpdesk.

2.3.9 E3-18 – Actuation of high pressure switch during test run

Trigger	Effect	Reset
High pressure switch is activated during test run.	Unit will stop test run.	If field setting 2-15=1 (default): Via the indoor unit remote controller, cycle OFF & ON.
		If field setting 2-15=0: Press BS3 on main PCB on outdoor unit, and then via indoor unit remote controller, cycle OFF & ON.

To solve the error code

INFORMATION

It is recommended to perform the checks in the listed order.

1. Check that all stop valves of the refrigerant circuit are open. See "4.2 Refrigerant circuit" [▸ 306].

   Possible cause: Closed stop valve in the refrigerant circuit.

2. Perform a check of the high pressure switch. See "3.7 High pressure switch" [▸ 222].

   Possible cause: Faulty high pressure switch.

3. Check if the refrigerant circuit is correctly charged. See "4.2 Refrigerant circuit" [▸ 306].

   Possible cause: Refrigerant overcharge.

4. Check for the presence of non-condensables and/or humidity in the refrigerant circuit. See "4.2 Refrigerant circuit" [▸ 306].

   Possible cause: Non-condensables and/or humidity in the refrigerant circuit.

5. Check if the refrigerant circuit is clogged. See "4.2 Refrigerant circuit" [▸ 306].

   Possible cause: Clogged refrigerant circuit.

6. Perform a check of the condenser side expansion valve. See "3.5 Expansion valve" [▸ 201].

   Possible cause: Faulty condenser side expansion valve.

7. Perform a check of the main PCB. See "3.9 Main PCB" [▸ 243].

   Possible cause: Faulty main PCB.

INFORMATION

If all procedures listed above have been performed and the problem is still present, contact the helpdesk.

2.3.10 E3-20-21-22 – Jumper open on main PCB

Main error code	Sub error code	Unit
E3	20	Main
	21	Sub 1
	22	Sub 2

INFORMATION

Main, Sub 1 and Sub 2 indications are relevant in multiple outdoor unit configurations. Main outdoor unit is the unit to which F1-F2 IN transmission line is connected. Main, Sub 1 and Sub 2 outdoor units can be identified by field setting 1-00.

Trigger	Effect	Reset
X4A jumper on main PCB open.	Unit will stop operating.	Ensure X4A jumper is inserted.

To solve the error code

INFORMATION

It is recommended to perform the checks in the listed order.

1. Check that the bridge connector X4A of the main PCB is correctly connected. See "3.9 Main PCB" [▸ 243].

   Possible cause: Open jumper X4A on main PCB.

2. Perform a check of the high pressure switch. See "3.7 High pressure switch" [▸ 222].

   Possible cause: Faulty high pressure switch.

3. Perform a check of the main PCB. See "3.9 Main PCB" [▸ 243].

   Possible cause: Faulty main PCB.

INFORMATION

If all procedures listed above have been performed and the problem is still present, contact the helpdesk.

2.3.11 E4-01-02-03 – Low pressure error

Main error code	Sub error code	Unit
E4	01	Main
	02	Sub 1
	03	Sub 2

INFORMATION

Main, Sub 1 and Sub 2 indications are relevant in multiple outdoor unit configurations. Main outdoor unit is the unit to which F1-F2 IN transmission line is connected. Main, Sub 1 and Sub 2 outdoor units can be identified by field setting 1-00.

Trigger	Effect	Reset
Low pressure control (by sensor) active due to <safety value certain times within certain minutes, see "6.6 Safety devices" [▶ 374].	Unit will stop operating.	Manual reset via user interface.
		Automatic Reset when Low Pressure >reset value, see "6.6 Safety devices" [▶ 374].

To solve the error code

INFORMATION

It is recommended to perform the checks in the listed order.

1 Check that all stop valves of the refrigerant circuit are open. See "4.2 Refrigerant circuit" [▶ 306].

Possible cause: Closed stop valve in the refrigerant circuit.

2 Perform a cross-wiring check of the F1-F2 transmission wiring between the indoor units and outdoor unit. Set field setting 2-5 of the outdoor unit to 1 to start the indoor units connected to that outdoor unit on forced fan operation, see "6.9 Field settings" [▶ 380]. If any other indoor unit (that should be connected to a different outdoor unit) is operating, this indoor unit is connected to the wrong outdoor unit (cross-wired). Correct the wiring between the indoor unit(s) and outdoor unit.

Possible cause: F1-F2 transmission wiring is cross-wired with another outdoor unit system.

3 Check if the refrigerant circuit is correctly charged. See "4.2 Refrigerant circuit" [▶ 306].

Possible cause: Refrigerant shortage.

4 Check for the presence of humidity in the refrigerant circuit. See "4.2 Refrigerant circuit" [▶ 306].

Possible cause: Humidity in the refrigerant circuit.

5 Check if the refrigerant circuit is clogged. See "4.2 Refrigerant circuit" [▶ 306].

Possible cause: Clogged refrigerant circuit.

6 Perform a check of the evaporator side expansion valve. See "3.5 Expansion valve" [▶ 201].

Possible cause: Faulty evaporator side expansion valve.

7 Check the required space around the outdoor unit heat exchanger. See "4.3 External factors" [▶ 316].

Possible cause: Insufficient air flow or air by-pass due to required space specifications not met.

8 Clean the outdoor heat exchanger. See "5 Maintenance" [▶ 318].

Possible cause: Dirty outdoor heat exchanger.

9 Perform a check of the refrigerant low pressure sensor. See "3.16 Refrigerant low pressure sensor" [▶ 288]

Possible cause: Faulty refrigerant low pressure sensor.

10 Perform a check of the main PCB. See "3.9 Main PCB" [▶ 243].

Possible cause: Faulty main PCB.

11 Check the F1-F2 transmission line between the indoor units and outdoor unit. See "4.1 Electrical circuit" [▸ 299].

Possible cause: Faulty or interruption in transmission line between indoor units and outdoor unit.

> **INFORMATION**
> If all procedures listed above have been performed and the problem is still present, contact the helpdesk.

2.3.12 E5-01-02-03 – Compressor overload/Motor Lock Error (M1C)

Main error code	Sub error code	Unit
E5	01	Main
	02	Sub 1
	03	Sub 2

> **INFORMATION**
> Main, Sub 1 and Sub 2 indications are relevant in multiple outdoor unit configurations. Main outdoor unit is the unit to which F1-F2 IN transmission line is connected. Main, Sub 1 and Sub 2 outdoor units can be identified by field setting 1-00.

Trigger	Effect	Reset
Compressor overload is detected for M1C.	Unit will stop operating.	Manual reset via user interface.

To solve the error code

> **INFORMATION**
> It is recommended to perform the checks in the listed order.

1 Check that all stop valves of the refrigerant circuit are open. See "4.2 Refrigerant circuit" [▸ 306].

Possible cause: Closed stop valve in the refrigerant circuit.

2 Check if the refrigerant circuit is clogged. See "4.2 Refrigerant circuit" [▸ 306].

Possible cause: Clogged refrigerant circuit.

3 Perform a check of the oil return valve Y2S. See "3.11 Oil return valve" [▸ 256].

Possible cause: Faulty oil return valve Y2S.

4 Perform a check of the oil return valve Y3S. See "3.11 Oil return valve" [▸ 256].

Possible cause: Faulty oil return valve Y3S.

5 Perform a check of the oil return valve Y4S. See "3.11 Oil return valve" [▸ 256].

Possible cause: Faulty oil return valve Y4S.

6 Check if there are oil traps in the field piping. See installation manual for piping rules.

Possible cause: Compressor running without oil will draw higher current and get locked.

7 Perform a check of the compressor. See "3.2 Compressor" [▸ 182].

Possible cause: Faulty compressor or miswiring of the compressor power supply cable.

8 Check liquid back issue. Check expansion valve operation. See "3.5 Expansion valve" [▸ 201].

Possible cause: Expansion valve CANNOT keep minimum superheat of 3 K while running as evaporator.

9 Check if the refrigerant circuit is correctly charged. See "4.2 Refrigerant circuit" [▸ 306].

Possible cause: Refrigerant shortage.

10 Perform a check of the 4-way valve. See "3.1 4-way valve" [▸ 169].

Possible cause: Faulty 4-way valve.

11 Perform a check of the discharge pipe thermistor. See "3.17 Thermistors" [▸ 292].

Possible cause: Faulty discharge pipe thermistor or connector fault.

12 Perform a check of the inverter PCB A3P. See "3.8 Inverter PCB" [▸ 225].

Possible cause: Faulty inverter PCB A3P.

13 Perform a check of the main PCB. See "3.9 Main PCB" [▸ 243].

Possible cause: Faulty main PCB.

> **INFORMATION**
> If all procedures listed above have been performed and the problem is still present, contact the helpdesk.

2.3.13 E5-07-08-09 – Compressor overload/Motor Lock Error (M2C)

Main error code	Sub error code	Unit
E5	07	Main
	08	Sub 1
	09	Sub 2

> **INFORMATION**
> Main, Sub 1 and Sub 2 indications are relevant in multiple outdoor unit configurations. Main outdoor unit is the unit to which F1-F2 IN transmission line is connected. Main, Sub 1 and Sub 2 outdoor units can be identified by field setting 1-00.

Trigger	Effect	Reset
Compressor overload is detected for M2C.	Unit will stop operating.	Manual reset via user interface.

To solve the error code

> **INFORMATION**
> It is recommended to perform the checks in the listed order.

1 Check that all stop valves of the refrigerant circuit are open. See "4.2 Refrigerant circuit" [▸ 306].

Possible cause: Closed stop valve in the refrigerant circuit.

2 Check if the refrigerant circuit is clogged. See "4.2 Refrigerant circuit" [▶ 306].

Possible cause: Clogged refrigerant circuit.

3 Perform a check of the oil return valve Y2S. See "3.11 Oil return valve" [▶ 256].

Possible cause: Faulty oil return valve Y2S.

4 Perform a check of the oil return valve Y3S. See "3.11 Oil return valve" [▶ 256].

Possible cause: Faulty oil return valve Y3S.

5 Perform a check of the oil return valve Y4S. See "3.11 Oil return valve" [▶ 256].

Possible cause: Faulty oil return valve Y4S.

6 Check if there are oil traps in the field piping. See installation manual for piping rules.

Possible cause: Compressor running without oil will draw higher current and get locked.

7 Perform a check of the compressor. See "3.2 Compressor" [▶ 182].

Possible cause: Faulty compressor or miswiring of the compressor power supply cable.

8 Check liquid back issue. Check expansion valve operation. See "3.5 Expansion valve" [▶ 201].

Possible cause: Expansion valve CANNOT keep minimum superheat of 3 K while running as evaporator.

9 Check if the refrigerant circuit is correctly charged. See "4.2 Refrigerant circuit" [▶ 306].

Possible cause: Refrigerant shortage.

10 Perform a check of the 4-way valve. See "3.1 4-way valve" [▶ 169].

Possible cause: Faulty 4-way valve.

11 Perform a check of the discharge pipe thermistor. See "3.17 Thermistors" [▶ 292].

Possible cause: Faulty discharge pipe thermistor or connector fault.

12 Perform a check of the inverter PCB A6P. See "3.8 Inverter PCB" [▶ 225].

Possible cause: Faulty inverter PCB A6P.

13 Perform a check of the main PCB. See "3.9 Main PCB" [▶ 243].

Possible cause: Faulty main PCB.

INFORMATION

If all procedures listed above have been performed and the problem is still present, contact the helpdesk.

2.3.14 E6-17-19-21 – Inverter overcurrent error

Main error code	Sub error code	Unit
E6	17	Main
	19	Sub 1
	21	Sub 2

INFORMATION

Main, Sub 1 and Sub 2 indications are relevant in multiple outdoor unit configurations. Main outdoor unit is the unit to which F1-F2 IN transmission line is connected. Main, Sub 1 and Sub 2 outdoor units can be identified by field setting 1-00.

Trigger	Effect	Reset
Overcurrent on Inverter PCB A3P for Compressor M1C.	Unit will stop operating.	Manual reset via user interface.
Actual current value of the compressor is abnormally high compared to nominal current of the compressor for at least 30 minutes.		

To solve the error code

INFORMATION

It is recommended to perform the checks in the listed order.

1. Perform a check of the refrigerant high pressure sensor. See "3.15 Refrigerant high pressure sensor" [▸ 284].

   Possible cause: Faulty refrigerant high pressure sensor.

2. Perform a check of the refrigerant low pressure sensor. See "3.16 Refrigerant low pressure sensor" [▸ 288]

   Possible cause: Faulty refrigerant low pressure sensor.

3. Connect a pressure gauge to both high and low pressure service ports and read the high and low refrigerant pressure. Connect the service monitoring tool to the unit and compare the pressure values to the pressure read on the pressure gauges. In case the service monitoring tool read-out does NOT correspond with the pressures read through the pressure gauges, the main PCB needs to be replaced, see "3.9 Main PCB" [▸ 243].

4. Perform a check of the main PCB. See "3.9 Main PCB" [▸ 243].

   Possible cause: Faulty main PCB.

5. Perform a check of the inverter PCB A3P. See "3.8 Inverter PCB" [▸ 225].

   Possible cause: Faulty inverter PCB A3P.

6. Perform a check of the compressor. See "3.2 Compressor" [▸ 182].

   Possible cause: Faulty compressor or miswiring of the compressor power supply cable.

INFORMATION

If all procedures listed above have been performed and the problem is still present, contact the helpdesk.

2.3.15 E6-18-20-22 – Inverter overcurrent error

Main error code	Sub error code	Unit
E6	18	Main
	20	Sub 1
	22	Sub 2

INFORMATION

Main, Sub 1 and Sub 2 indications are relevant in multiple outdoor unit configurations. Main outdoor unit is the unit to which F1-F2 IN transmission line is connected. Main, Sub 1 and Sub 2 outdoor units can be identified by field setting 1-00.

Trigger	Effect	Reset
Overcurrent on inverter PCB A6P for compressor M2C.	Unit will stop operating.	Manual reset via user interface.
Actual current value of the compressor is abnormally high compared to nominal current of the compressor for at least 30 minutes.		

To solve the error code

INFORMATION

It is recommended to perform the checks in the listed order.

1. Perform a check of the refrigerant high pressure sensor. See "3.15 Refrigerant high pressure sensor" [▸ 284].

   Possible cause: Faulty refrigerant high pressure sensor.

2. Perform a check of the refrigerant low pressure sensor. See "3.16 Refrigerant low pressure sensor" [▸ 288]

   Possible cause: Faulty refrigerant low pressure sensor.

3. Connect a pressure gauge to both high and low pressure service ports and read the high and low refrigerant pressure. Connect the service monitoring tool to the unit and compare the pressure values to the pressure read on the pressure gauges. In case the service monitoring tool read-out does NOT correspond with the pressures read through the pressure gauges, the main PCB needs to be replaced, see "3.9 Main PCB" [▸ 243].

4. Perform a check of the main PCB. See "3.9 Main PCB" [▸ 243].

   Possible cause: Faulty main PCB.

5. Perform a check of the inverter PCB A6P. See "3.8 Inverter PCB" [▸ 225].

   Possible cause: Faulty inverter PCB A6P.

6. Perform a check of the compressor. See "3.2 Compressor" [▸ 182].

   Possible cause: Faulty compressor or miswiring of the compressor power supply cable.

INFORMATION

If all procedures listed above have been performed and the problem is still present, contact the helpdesk.

2.3.16 E7-01-13-25 – Outdoor unit fan motor M1F error

Main error code	Sub error code	Unit
E7	01	Main
	13	Sub 1
	25	Sub 2

INFORMATION

Main, Sub 1 and Sub 2 indications are relevant in multiple outdoor unit configurations. Main outdoor unit is the unit to which F1-F2 IN transmission line is connected. Main, Sub 1 and Sub 2 outdoor units can be identified by field setting 1-00.

Trigger	Effect	Reset
Malfunction of rotation detection for M1F. Careful, there is no rpm detection. Fan judgement is based on logic by current drawn.	Unit will stop operating.	Manual reset via user interface.

To solve the error code

INFORMATION

It is recommended to perform the checks in the listed order.

1. Perform a check of the fan inverter PCB A4P. See "3.6 Fan inverter PCB" [▸ 210].

   Possible cause: Faulty fan inverter PCB A4P.

2. Check if power supply cable to fan motor is NOT loose. Check connector X1A on fan inverter PCB A4P. See "To check the wiring of the fan inverter PCB" "3.6 Fan inverter PCB" [▸ 210]. Check wire to fan motor M1F.

   Possible cause: Faulty power supply cable to fan motor M1F.

3. Perform a check of the outdoor unit fan motor M1F. See "3.12 Outdoor unit fan motor" [▸ 262].

   Possible cause: Faulty outdoor unit fan motor M1F.

INFORMATION

If all procedures listed above have been performed and the problem is still present, contact the helpdesk.

2.3.17 E7-02-14-26 – Outdoor unit fan motor M2F error

Main error code	Sub error code	Unit
E7	02	Main
	14	Sub 1
	26	Sub 2

INFORMATION

Main, Sub 1 and Sub 2 indications are relevant in multiple outdoor unit configurations. Main outdoor unit is the unit to which F1-F2 IN transmission line is connected. Main, Sub 1 and Sub 2 outdoor units can be identified by field setting 1-00.

Trigger	Effect	Reset
Malfunction of rotation detection for M2F. Careful, there is no rpm detection. Fan judgement is based on logic by current drawn.	Unit will stop operating.	Manual reset via user interface.

To solve the error code

INFORMATION

It is recommended to perform the checks in the listed order.

1. Perform a check of the fan inverter PCB A7P. See "3.6 Fan inverter PCB" [▸ 210].

   Possible cause: Faulty fan inverter PCB A7P.

2. Check if power supply cable to fan motor is NOT loose. Check connector X2A on fan inverter PCB A7P. See "To check the wiring of the fan inverter PCB" "3.6 Fan inverter PCB" [▸ 210]. Check wire to fan motor M2F.

   Possible cause: Faulty power supply cable to fan motor M2F.

3. Perform a check of the outdoor unit fan motor M2F. See "3.12 Outdoor unit fan motor" [▸ 262].

   Possible cause: Faulty outdoor unit fan motor M2F.

INFORMATION

If all procedures listed above have been performed and the problem is still present, contact the helpdesk.

2.3.18 E7-05-17-29 – Outdoor unit fan motor M1F overcurrent error

Main error code	Sub error code	Unit
E7	05	Main
	17	Sub 1
	29	Sub 2

INFORMATION

Main, Sub 1 and Sub 2 indications are relevant in multiple outdoor unit configurations. Main outdoor unit is the unit to which F1-F2 IN transmission line is connected. Main, Sub 1 and Sub 2 outdoor units can be identified by field setting 1-00.

Trigger	Effect	Reset
Overcurrent detected on outdoor unit fan motor M1F.	Unit will stop operating.	Manual reset via user interface.

To solve the error code

INFORMATION

It is recommended to perform the checks in the listed order.

1 Perform a check of the fan inverter PCB A4P. See "3.6 Fan inverter PCB" [▸ 210].

Possible cause: Faulty fan inverter PCB A4P.

2 Perform a check of the outdoor unit fan motor M1F. See "3.12 Outdoor unit fan motor" [▸ 262].

Possible cause: Faulty outdoor unit fan motor M1F.

INFORMATION

If all procedures listed above have been performed and the problem is still present, contact the helpdesk.

2.3.19 E7-06-18-30 – Outdoor unit fan motor M2F overcurrent error

Main error code	Sub error code	Unit
E7	06	Main
	18	Sub 1
	30	Sub 2

INFORMATION

Main, Sub 1 and Sub 2 indications are relevant in multiple outdoor unit configurations. Main outdoor unit is the unit to which F1-F2 IN transmission line is connected. Main, Sub 1 and Sub 2 outdoor units can be identified by field setting 1-00.

Trigger	Effect	Reset
Overcurrent detected on outdoor unit fan motor M2F.	Unit will stop operating.	Manual reset via user interface.

To solve the error code

INFORMATION

It is recommended to perform the checks in the listed order.

1 Perform a check of the fan inverter PCB A7P. See "3.6 Fan inverter PCB" [▶ 210].

Possible cause: Faulty fan inverter PCB A7P.

2 Perform a check of the outdoor unit fan motor M2F. See "3.12 Outdoor unit fan motor" [▶ 262].

Possible cause: Faulty outdoor unit fan motor M2F.

> **INFORMATION**
> If all procedures listed above have been performed and the problem is still present, contact the helpdesk.

2.3.20 E7-09-21-33 – Fan inverter PCB A4P (integrated power module) overheated

Main error code	Sub error code	Unit
E7	09	Main
	21	Sub 1
	33	Sub 2

> **INFORMATION**
> Main, Sub 1 and Sub 2 indications are relevant in multiple outdoor unit configurations. Main outdoor unit is the unit to which F1-F2 IN transmission line is connected. Main, Sub 1 and Sub 2 outdoor units can be identified by field setting 1-00.

Trigger	Effect	Reset
Fan inverter PCB A4P is overheated.	Unit will stop operating.	Manual reset via user interface.

To solve the error code

> **INFORMATION**
> It is recommended to perform the checks in the listed order.

1 Perform a check of the fan inverter PCB A4P. See "3.6 Fan inverter PCB" [▶ 210].

Possible cause: Faulty fan inverter PCB A4P.

2 Check the required space around the outdoor unit heat exchanger. See "4.3 External factors" [▶ 316].

Possible cause: Insufficient air flow or air by-pass due to required space specifications not met.

3 Clean the outdoor heat exchanger. See "5 Maintenance" [▶ 318].

Possible cause: Dirty outdoor heat exchanger.

4 Perform a check of the liquid cooling expansion valve. See "3.5 Expansion valve" [▶ 201].

Possible cause: Faulty liquid cooling expansion valve.

INFORMATION

If all procedures listed above have been performed and the problem is still present, contact the helpdesk.

2.3.21 E7-10-22-34 – Fan inverter PCB A7P (integrated power module) overheated

Main error code	Sub error code	Unit
E7	10	Main
	22	Sub 1
	34	Sub 2

INFORMATION

Main, Sub 1 and Sub 2 indications are relevant in multiple outdoor unit configurations. Main outdoor unit is the unit to which F1-F2 IN transmission line is connected. Main, Sub 1 and Sub 2 outdoor units can be identified by field setting 1-00.

Trigger	Effect	Reset
Fan inverter PCB A7P is overheated.	Unit will stop operating.	Manual reset via user interface.

To solve the error code

INFORMATION

It is recommended to perform the checks in the listed order.

1. Perform a check of the fan inverter PCB A7P. See "3.6 Fan inverter PCB" [▶ 210].

   Possible cause: Faulty fan inverter PCB A7P.

2. Check the required space around the outdoor unit heat exchanger. See "4.3 External factors" [▶ 316].

   Possible cause: Insufficient air flow or air by-pass due to required space specifications not met.

3. Clean the outdoor heat exchanger. See "5 Maintenance" [▶ 318].

   Possible cause: Dirty outdoor heat exchanger.

4. Perform a check of the liquid cooling expansion valve. See "3.5 Expansion valve" [▶ 201].

   Possible cause: Faulty liquid cooling expansion valve.

INFORMATION

If all procedures listed above have been performed and the problem is still present, contact the helpdesk.

2.3.22 E9-01-05-08 – Electronic expansion valve Y1E malfunction

Main error code	Sub error code	Unit
E9	01	Main
	05	Sub 1
	08	Sub 2

INFORMATION

Main, Sub 1 and Sub 2 indications are relevant in multiple outdoor unit configurations. Main outdoor unit is the unit to which F1-F2 IN transmission line is connected. Main, Sub 1 and Sub 2 outdoor units can be identified by field setting 1-00.

Trigger	Effect	Reset
Main expansion valve Y1E malfunction.	Unit will stop operating.	Power reset at outdoor unit.

To solve the error code

INFORMATION

It is recommended to perform the checks in the listed order.

INFORMATION

When the power is switched ON, the outdoor unit main PCB checks all expansion valve coil windings by current check.

1. Perform a check of the main PCB. See "3.9 Main PCB" [▸ 243].

   Possible cause: Faulty main PCB.

2. Perform a check of the main expansion valve. See "3.5 Expansion valve" [▸ 201].

   Possible cause: Faulty main expansion valve.

3. Perform a check of all refrigerant side thermistors. See "3.17 Thermistors" [▸ 292].

   Possible cause: Faulty refrigerant side thermistor(s).

4. Perform a check of the refrigerant low pressure sensor. See "3.16 Refrigerant low pressure sensor" [▸ 288]

   Possible cause: Faulty refrigerant low pressure sensor.

5. Check if the refrigerant circuit is correctly charged. See "4.2 Refrigerant circuit" [▸ 306].

   Possible cause: Refrigerant overcharge.

6. Check if the power supply is compliant with the regulations. See "4.1 Electrical circuit" [▸ 299].

   Possible cause:
   - Faulty or disturbance of the power supply (power supply MUST be within range of nominal operating voltage ±4%),
   - Power drop,
   - Short circuit.

7 Perform a power reset. If the error disappears and is raised again after a while, check for the presence of an external source causing electrical noise. See "4.3 External factors" [▸ 316].

Possible cause: External source may cause interference.

> **INFORMATION**
> If all procedures listed above have been performed and the problem is still present, contact the helpdesk.

2.3.23 E9-03-06-09 – Electronic expansion valve Y2E malfunction

Main error code	Sub error code	Unit
E9	03	Main
	06	Sub 1
	09	Sub 2

> **INFORMATION**
> Main, Sub 1 and Sub 2 indications are relevant in multiple outdoor unit configurations. Main outdoor unit is the unit to which F1-F2 IN transmission line is connected. Main, Sub 1 and Sub 2 outdoor units can be identified by field setting 1-00.

Trigger	Effect	Reset
Subcool expansion valve Y2E malfunction.	Unit will stop operating.	Power reset at outdoor unit.

To solve the error code

> **INFORMATION**
> It is recommended to perform the checks in the listed order.

> **INFORMATION**
> When the power is switched ON, the outdoor unit main PCB checks all expansion valve coil windings by current check.

1 Perform a check of the main PCB. See "3.9 Main PCB" [▸ 243].

Possible cause: Faulty main PCB.

2 Perform a check of the subcool expansion valve. See "3.5 Expansion valve" [▸ 201].

Possible cause: Faulty subcool expansion valve.

3 Perform a check of all refrigerant side thermistors. See "3.17 Thermistors" [▸ 292].

Possible cause: Faulty refrigerant side thermistor(s).

4 Perform a check of the refrigerant low pressure sensor. See "3.16 Refrigerant low pressure sensor" [▸ 288]

Possible cause: Faulty refrigerant low pressure sensor.

5 Check if the refrigerant circuit is correctly charged. See "4.2 Refrigerant circuit" [▸ 306].

Possible cause: Refrigerant overcharge.

6 Check if the power supply is compliant with the regulations. See "4.1 Electrical circuit" [▸ 299].

Possible cause:
- Faulty or disturbance of the power supply (power supply MUST be within range of nominal operating voltage ±4%),
- Power drop,
- Short circuit.

7 Perform a power reset. If the error disappears and is raised again after a while, check for the presence of an external source causing electrical noise. See "4.3 External factors" [▸ 316].

Possible cause: External source may cause interference.

> **INFORMATION**
> If all procedures listed above have been performed and the problem is still present, contact the helpdesk.

2.3.24 E9-04-07-10 – Electronic expansion valve Y3E abnormality

Main error code	Sub error code	Unit
E9	04	Main
	07	Sub 1
	10	Sub 2

> **INFORMATION**
> Main, Sub 1 and Sub 2 indications are relevant in multiple outdoor unit configurations. Main outdoor unit is the unit to which F1-F2 IN transmission line is connected. Main, Sub 1 and Sub 2 outdoor units can be identified by field setting 1-00.

Trigger	Effect	Reset
Liquid cooling expansion valve Y3E malfunction.	Unit will stop operating.	Power reset at outdoor unit.

To solve the error code

> **INFORMATION**
> It is recommended to perform the checks in the listed order.

> **INFORMATION**
> When the power is switched ON, the outdoor unit main PCB checks all expansion valve coil windings by current check.

1 Perform a check of the main PCB. See "3.9 Main PCB" [▸ 243].

Possible cause: Faulty main PCB.

2 Perform a check of the liquid cooling expansion valve. See "3.5 Expansion valve" [▸ 201].

Possible cause: Faulty liquid cooling expansion valve.

3 Perform a check of all refrigerant side thermistors. See "3.17 Thermistors" [▸ 292].

Possible cause: Faulty refrigerant side thermistor(s).

4 Perform a check of the refrigerant low pressure sensor. See "3.16 Refrigerant low pressure sensor" [▸ 288]

Possible cause: Faulty refrigerant low pressure sensor.

5 Check if the refrigerant circuit is correctly charged. See "4.2 Refrigerant circuit" [▸ 306].

Possible cause: Refrigerant overcharge.

6 Check if the power supply is compliant with the regulations. See "4.1 Electrical circuit" [▸ 299].

Possible cause:
- Faulty or disturbance of the power supply (power supply MUST be within range of nominal operating voltage ±4%),
- Power drop,
- Short circuit.

7 Perform a power reset. If the error disappears and is raised again after a while, check for the presence of an external source causing electrical noise. See "4.3 External factors" [▸ 316].

Possible cause: External source may cause interference.

INFORMATION

If all procedures listed above have been performed and the problem is still present, contact the helpdesk.

2.3.25 E9-20-21-22 – Electronic Expansion Valve (Y1E) failure

Main error code	Sub error code	Unit
E9	20	Main
	21	Sub 1
	22	Sub 2

INFORMATION

Main, Sub 1 and Sub 2 indications are relevant in multiple outdoor unit configurations. Main outdoor unit is the unit to which F1-F2 IN transmission line is connected. Main, Sub 1 and Sub 2 outdoor units can be identified by field setting 1-00.

Trigger	Effect	Reset
Main expansion valve Y1E malfunction.	Unit will stop operating.	Power reset at outdoor unit.

To solve the error code

INFORMATION

It is recommended to perform the checks in the listed order.

INFORMATION

When the power is switched ON, the outdoor unit main PCB checks all expansion valve coil windings by current check.

1 Perform a check of the main PCB. See "3.9 Main PCB" [▸ 243].

Possible cause: Faulty main PCB.

2 Perform a check of the main expansion valve. See "3.5 Expansion valve" [▸ 201].

Possible cause: Faulty main expansion valve.

3 Perform a check of all refrigerant side thermistors. See "3.17 Thermistors" [▸ 292].

Possible cause: Faulty refrigerant side thermistor(s).

4 Perform a check of the refrigerant low pressure sensor. See "3.16 Refrigerant low pressure sensor" [▸ 288]

Possible cause: Faulty refrigerant low pressure sensor.

5 Check if the refrigerant circuit is correctly charged. See "4.2 Refrigerant circuit" [▸ 306].

Possible cause: Refrigerant overcharge.

6 Check if the power supply is compliant with the regulations. See "4.1 Electrical circuit" [▸ 299].

Possible cause:
- Faulty or disturbance of the power supply (power supply MUST be within range of nominal operating voltage ±4%),
- Power drop,
- Short circuit.

7 Perform a power reset. If the error disappears and is raised again after a while, check for the presence of an external source causing electrical noise. See "4.3 External factors" [▸ 316].

Possible cause: External source may cause interference.

INFORMATION

If all procedures listed above have been performed and the problem is still present, contact the helpdesk.

2.3.26 E9-23-24-25 – Electronic expansion valve (Y2E) failure

Main error code	Sub error code	Unit
E9	23	Main
	24	Sub 1
	25	Sub 2

INFORMATION

Main, Sub 1 and Sub 2 indications are relevant in multiple outdoor unit configurations. Main outdoor unit is the unit to which F1-F2 IN transmission line is connected. Main, Sub 1 and Sub 2 outdoor units can be identified by field setting 1-00.

Trigger	Effect	Reset
Subcool expansion valve Y2E malfunction.	Unit will stop operating.	Power reset at outdoor unit.

To solve the error code

INFORMATION

It is recommended to perform the checks in the listed order.

INFORMATION

When the power is switched ON, the outdoor unit main PCB checks all expansion valve coil windings by current check.

1 Perform a check of the main PCB. See "3.9 Main PCB" [▸ 243].

Possible cause: Faulty main PCB.

2 Perform a check of the subcool expansion valve. See "3.5 Expansion valve" [▸ 201].

Possible cause: Faulty subcool expansion valve.

3 Perform a check of all refrigerant side thermistors. See "3.17 Thermistors" [▸ 292].

Possible cause: Faulty refrigerant side thermistor(s).

4 Perform a check of the refrigerant low pressure sensor. See "3.16 Refrigerant low pressure sensor" [▸ 288]

Possible cause: Faulty refrigerant low pressure sensor.

5 Check if the refrigerant circuit is correctly charged. See "4.2 Refrigerant circuit" [▸ 306].

Possible cause: Refrigerant overcharge.

6 Check if the power supply is compliant with the regulations. See "4.1 Electrical circuit" [▸ 299].

Possible cause:
- Faulty or disturbance of the power supply (power supply MUST be within range of nominal operating voltage ±4%),
- Power drop,
- Short circuit.

7 Perform a power reset. If the error disappears and is raised again after a while, check for the presence of an external source causing electrical noise. See "4.3 External factors" [▸ 316].

Possible cause: External source may cause interference.

INFORMATION

If all procedures listed above have been performed and the problem is still present, contact the helpdesk.

2.3.27 E9-26-27-28 – Electronic expansion valve (Y4E) malfunction

INFORMATION

This error is ONLY applicable for RYYQ-U units.

Main error code	Sub error code	Unit
E9	26	Main
	27	Sub 1
	28	Sub 2

INFORMATION

Main, Sub 1 and Sub 2 indications are relevant in multiple outdoor unit configurations. Main outdoor unit is the unit to which F1-F2 IN transmission line is connected. Main, Sub 1 and Sub 2 outdoor units can be identified by field setting 1-00.

Trigger	Effect	Reset
Storage vessel expansion valve Y4E malfunction.	Unit will stop operating.	Power reset at outdoor unit.

To solve the error code

INFORMATION

It is recommended to perform the checks in the listed order.

INFORMATION

When the power is switched ON, the outdoor unit main PCB checks all expansion valve coil windings by current check.

1 Perform a check of the main PCB. See "3.9 Main PCB" [▸ 243].

Possible cause: Faulty main PCB.

2 Perform a check of the storage vessel expansion valve. See "3.5 Expansion valve" [▸ 201].

Possible cause: Faulty storage vessel expansion valve.

3 Perform a check of all refrigerant side thermistors. See "3.17 Thermistors" [▸ 292].

Possible cause: Faulty refrigerant side thermistor(s).

4 Perform a check of the refrigerant low pressure sensor. See "3.16 Refrigerant low pressure sensor" [▸ 288]

Possible cause: Faulty refrigerant low pressure sensor.

5 Check if the refrigerant circuit is correctly charged. See "4.2 Refrigerant circuit" [▸ 306].

Possible cause: Refrigerant overcharge.

6 Check if the power supply is compliant with the regulations. See "4.1 Electrical circuit" [▸ 299].

Possible cause:
- Faulty or disturbance of the power supply (power supply MUST be within range of nominal operating voltage ±4%),
- Power drop,
- Short circuit.

7 Perform a power reset. If the error disappears and is raised again after a while, check for the presence of an external source causing electrical noise. See "4.3 External factors" [▸ 316].

Possible cause: External source may cause interference.

> **INFORMATION**
> If all procedures listed above have been performed and the problem is still present, contact the helpdesk.

2.3.28 E9-48-49-50 – Electronic expansion valve overcurrent error

Main error code	Sub error code	Unit
E9	48	Main
	49	Sub 1
	50	Sub 2

> **INFORMATION**
> Main, Sub 1 and Sub 2 indications are relevant in multiple outdoor unit configurations. Main outdoor unit is the unit to which F1-F2 IN transmission line is connected. Main, Sub 1 and Sub 2 outdoor units can be identified by field setting 1-00.

Trigger	Effect	Reset
Expansion valve overcurrent.	Unit will stop operating.	Power reset at outdoor unit.

To solve the error code

> **INFORMATION**
> It is recommended to perform the checks in the listed order.

> **INFORMATION**
> When the power is switched ON, the outdoor unit main PCB checks all expansion valve coil windings by current check.

1. Perform a check of the main PCB. See "3.9 Main PCB" [▸ 243].

   Possible cause: Faulty main PCB.

2. Perform a check of all expansion valves. See "3.5 Expansion valve" [▸ 201].

   Possible cause: Faulty expansion valve.

3. Perform a check of all refrigerant side thermistors. See "3.17 Thermistors" [▸ 292].

   Possible cause: Faulty refrigerant side thermistor(s).

4. Perform a check of the refrigerant low pressure sensor. See "3.16 Refrigerant low pressure sensor" [▸ 288]

   Possible cause: Faulty refrigerant low pressure sensor.

5. Check if the refrigerant circuit is correctly charged. See "4.2 Refrigerant circuit" [▸ 306].

   Possible cause: Refrigerant overcharge.

6. Check if the power supply is compliant with the regulations. See "4.1 Electrical circuit" [▸ 299].

Possible cause:
- Faulty or disturbance of the power supply (power supply MUST be within range of nominal operating voltage ±4%),
- Power drop,
- Short circuit.

7 Perform a power reset. If the error disappears and is raised again after a while, check for the presence of an external source causing electrical noise. See "4.3 External factors" [▸ 316].

Possible cause: External source may cause interference.

> **INFORMATION**
> If all procedures listed above have been performed and the problem is still present, contact the helpdesk.

2.3.29 E9-51-52-53 – Electronic expansion valve thermal cutting error

Main error code	Sub error code	Unit
E9	51	Main
	52	Sub 1
	53	Sub 2

> **INFORMATION**
> Main, Sub 1 and Sub 2 indications are relevant in multiple outdoor unit configurations. Main outdoor unit is the unit to which F1-F2 IN transmission line is connected. Main, Sub 1 and Sub 2 outdoor units can be identified by field setting 1-00.

Trigger	Effect	Reset
Expansion valve thermal cutting error.	Unit will stop operating.	Power reset at outdoor unit.

To solve the error code

> **INFORMATION**
> It is recommended to perform the checks in the listed order.

> **INFORMATION**
> When the power is switched ON, the outdoor unit main PCB checks all expansion valve coil windings by current check.

1 Perform a check of the main PCB. See "3.9 Main PCB" [▸ 243].

Possible cause: Faulty main PCB.

2 Perform a check of all expansion valves. See "3.5 Expansion valve" [▸ 201].

Possible cause: Faulty expansion valve.

3 Perform a check of all refrigerant side thermistors. See "3.17 Thermistors" [▸ 292].

Possible cause: Faulty refrigerant side thermistor(s).

4 Perform a check of the refrigerant low pressure sensor. See "3.16 Refrigerant low pressure sensor" [▸ 288]

Possible cause: Faulty refrigerant low pressure sensor.

5 Check if the refrigerant circuit is correctly charged. See "4.2 Refrigerant circuit" [▸ 306].

Possible cause: Refrigerant overcharge.

6 Check if the power supply is compliant with the regulations. See "4.1 Electrical circuit" [▸ 299].

Possible cause:
- Faulty or disturbance of the power supply (power supply MUST be within range of nominal operating voltage ±4%),
- Power drop,
- Short circuit.

7 Perform a power reset. If the error disappears and is raised again after a while, check for the presence of an external source causing electrical noise. See "4.3 External factors" [▸ 316].

Possible cause: External source may cause interference.

> **INFORMATION**
> If all procedures listed above have been performed and the problem is still present, contact the helpdesk.

2.3.30 E9-54-55-56 – Electronic expansion valve defective circuit

Main error code	Sub error code	Unit
E9	54	Main
	55	Sub 1
	56	Sub 2

> **INFORMATION**
> Main, Sub 1 and Sub 2 indications are relevant in multiple outdoor unit configurations. Main outdoor unit is the unit to which F1-F2 IN transmission line is connected. Main, Sub 1 and Sub 2 outdoor units can be identified by field setting 1-00.

Trigger	Effect	Reset
Expansion valve defective circuit.	Unit will stop operating.	Power reset at outdoor unit.

To solve the error code

> **INFORMATION**
> It is recommended to perform the checks in the listed order.

> **INFORMATION**
> When the power is switched ON, the outdoor unit main PCB checks all expansion valve coil windings by current check.

1 Perform a check of the main PCB. See "3.9 Main PCB" [▸ 243].

Possible cause: Faulty main PCB.

2 Perform a check of all expansion valves. See "3.5 Expansion valve" [▸ 201].

Possible cause: Faulty expansion valve.

3 Perform a check of all refrigerant side thermistors. See "3.17 Thermistors" [▸ 292].

Possible cause: Faulty refrigerant side thermistor(s).

4 Perform a check of the refrigerant low pressure sensor. See "3.16 Refrigerant low pressure sensor" [▸ 288]

Possible cause: Faulty refrigerant low pressure sensor.

5 Check if the refrigerant circuit is correctly charged. See "4.2 Refrigerant circuit" [▸ 306].

Possible cause: Refrigerant overcharge.

6 Check if the power supply is compliant with the regulations. See "4.1 Electrical circuit" [▸ 299].

Possible cause:
- Faulty or disturbance of the power supply (power supply MUST be within range of nominal operating voltage ±4%),
- Power drop,
- Short circuit.

7 Perform a power reset. If the error disappears and is raised again after a while, check for the presence of an external source causing electrical noise. See "4.3 External factors" [▸ 316].

Possible cause: External source may cause interference.

INFORMATION

If all procedures listed above have been performed and the problem is still present, contact the helpdesk.

2.3.31 F3-01-03-05 – Compressor discharge temperature too high

Main error code	Sub error code	Unit
F3	01	Main
	03	Sub 1
	05	Sub 2

INFORMATION

Main, Sub 1 and Sub 2 indications are relevant in multiple outdoor unit configurations. Main outdoor unit is the unit to which F1-F2 IN transmission line is connected. Main, Sub 1 and Sub 2 outdoor units can be identified by field setting 1-00.

Trigger	Effect	Reset
Discharge temperature >safety value certain times within certain minutes, see "6.6 Safety devices" [▶ 374].	Unit will stop operating.	Manual reset via user interface.
		Automatic reset when discharge temperature <reset value, see "6.6 Safety devices" [▶ 374].

To solve the error code

INFORMATION

It is recommended to perform the checks in the listed order.

1. Check that all stop valves of the refrigerant circuit are open. See "4.2 Refrigerant circuit" [▶ 306].

   Possible cause: Closed stop valve in the refrigerant circuit.

2. Perform a check of the discharge pipe thermistor. See "3.17 Thermistors" [▶ 292].

   Possible cause: Faulty discharge pipe thermistor or connector fault.

3. Perform a check of the main PCB. See "3.9 Main PCB" [▶ 243].

   Possible cause: Faulty main PCB.

4. Check if the refrigerant circuit is correctly charged. See "4.2 Refrigerant circuit" [▶ 306].

   Possible cause: Refrigerant shortage.

5. Perform a check of the compressor. See "3.2 Compressor" [▶ 182].

   Possible cause: Faulty compressor or miswiring of the compressor power supply cable.

6. Perform a check of the main expansion valve. See "3.5 Expansion valve" [▶ 201].

   Possible cause: Faulty main expansion valve.

7. Perform a check of the expansion valve(s) of the indoor unit(s). See service manual of the respective indoor unit(s) for more information.

   Possible cause: Faulty indoor unit expansion valve.

INFORMATION

If all procedures listed above have been performed and the problem is still present, contact the helpdesk.

2.3.32 F3-20-21-22 – Compressor body temperature too high

Main error code	Sub error code	Unit
F3	20	Main
	21	Sub 1
	22	Sub 2

INFORMATION

Main, Sub 1 and Sub 2 indications are relevant in multiple outdoor unit configurations. Main outdoor unit is the unit to which F1-F2 IN transmission line is connected. Main, Sub 1 and Sub 2 outdoor units can be identified by field setting 1-00.

Trigger	Effect	Reset
Body temperature >safety value certain times within certain minutes, see "6.6 Safety devices" [▸ 374].	Unit will stop operating.	Manual reset via user interface.
		Automatic reset when body temperature <reset value, see "6.6 Safety devices" [▸ 374].

To solve the error code

INFORMATION

It is recommended to perform the checks in the listed order.

1. Perform a check of the compressor body thermistors. See "3.17 Thermistors" [▸ 292].

   Possible cause: Faulty compressor body thermistor or connector fault.

2. Perform a check of the main PCB. See "3.9 Main PCB" [▸ 243].

   Possible cause: Faulty main PCB.

3. Check if the refrigerant circuit is correctly charged. See "4.2 Refrigerant circuit" [▸ 306].

   Possible cause: Refrigerant shortage.

4. Perform a check of the compressor. See "3.2 Compressor" [▸ 182].

   Possible cause: Faulty compressor or miswiring of the compressor power supply cable.

5. Perform a check of the main expansion valve. See "3.5 Expansion valve" [▸ 201].

   Possible cause: Faulty main expansion valve.

6. Perform a check of the expansion valve(s) of the indoor unit(s). See service manual of the respective indoor unit(s) for more information.

   Possible cause: Faulty indoor unit expansion valve.

INFORMATION

If all procedures listed above have been performed and the problem is still present, contact the helpdesk.

2.3.33 F4-01 – Wet operation caution

Trigger	Effect	Reset
Discharge superheat <10˚C ($SH_{Discharge}=T_{Discharge} - T_{condensation}$).	Unit keeps running.	Automatic reset when discharge superheat >10˚C.

To solve the error code

INFORMATION

It is recommended to perform the checks in the listed order.

1. Check if the refrigerant circuit is correctly charged. See "4.2 Refrigerant circuit" [▸ 306].

   Possible cause: Refrigerant overcharge.

2. Check for the presence of non-condensables and/or humidity in the refrigerant circuit. See "4.2 Refrigerant circuit" [▸ 306].

   Possible cause: Non-condensables and/or humidity in the refrigerant circuit.

3. Perform a check of the evaporator side expansion valve. See "3.5 Expansion valve" [▸ 201].

   Possible cause: Faulty evaporator side expansion valve.

4. Check for objects near the indoor unit that may block the airflow. See "4.3 External factors" [▸ 316].

   Possible cause: Airflow of the indoor unit is blocked.

5. Clean the air filters of the indoor unit(s). See service manual of the respective indoor unit(s).

   Possible cause: Faulty or clogged air filter.

6. Adjust external static pressure setting for ducted type indoor units, if necessary.

7. Perform a check of the indoor unit fan motor. See service manual of the respective indoor unit(s).

   Possible cause: Faulty indoor unit fan motor.

8. Perform a check of the discharge pipe thermistor. See "3.17 Thermistors" [▸ 292].

   Possible cause: Faulty discharge pipe thermistor or connector fault.

9. Perform a check of the refrigerant high pressure sensor. See "3.15 Refrigerant high pressure sensor" [▸ 284].

   Possible cause: Faulty refrigerant high pressure sensor.

10. Perform a check of the indoor air thermistor. See indoor unit manuals to check thermistors on indoor units.

    Possible cause: Faulty indoor air thermistor.

11. Check all indoor units operation in heating mode. Check for room temperatures below 20°C. Check if caution disappears once rooms heat-up. If NOT, continue checking the cause of the wet operation.

    Possible cause: Indoor room temperature too low when in heating mode. Too cold rooms might create more subcool resulting in wet operation.

INFORMATION

If all procedures listed above have been performed and the problem is still present, contact the helpdesk.

2.3.34 F6-02 – Refrigerant overcharge detection during test-run

Trigger	Effect	Reset
Discharge superheat <10˚C ($SH_{Discharge}$=$T_{Discharge}$ – $T_{condensation}$) during test run.	Unit will stop test run.	Push BS3 (return) button once.
Excessive subcool is detected from comparison of ambient thermistor, liquid thermistor, de-icer thermistor to saturated temperature derived from high pressure sensor S1NPH.		

To solve the error code

INFORMATION

It is recommended to perform the checks in the listed order.

1. Perform a check of the outdoor air thermistor. See "3.17 Thermistors" [▸ 292].

   Possible cause: Faulty ambient air thermistor.

2. Perform a check of the main refrigerant liquid thermistor. See "3.17 Thermistors" [▸ 292].

   Possible cause: Faulty main refrigerant liquid thermistor or connector fault.

3. Perform a check of the de–icer thermistor. See "3.17 Thermistors" [▸ 292].

   Possible cause: Faulty de–icer thermistor or connector fault.

4. Check if the refrigerant circuit is correctly charged. See "4.2 Refrigerant circuit" [▸ 306].

   Possible cause: Refrigerant overcharge.

5. Check for the presence of non-condensables and/or humidity in the refrigerant circuit. See "4.2 Refrigerant circuit" [▸ 306].

   Possible cause: Non-condensables and/or humidity in the refrigerant circuit.

6. Perform a check of the evaporator side expansion valve. See "3.5 Expansion valve" [▸ 201].

   Possible cause: Faulty evaporator side expansion valve.

7. Check for objects near the indoor unit that may block the airflow. See "4.3 External factors" [▸ 316].

   Possible cause: Airflow of the indoor unit is blocked.

8. Clean the air filters of the indoor unit(s). See service manual of the respective indoor unit(s).

   Possible cause: Faulty or clogged air filter.

9. Adjust external static pressure setting for ducted type indoor units, if necessary.

10. Perform a check of the indoor unit fan motor. See service manual of the respective indoor unit(s).

Possible cause: Faulty indoor unit fan motor.

11 Perform a check of the discharge pipe thermistor. See "3.17 Thermistors" [▸ 292].

Possible cause: Faulty discharge pipe thermistor or connector fault.

12 Perform a check of the refrigerant high pressure sensor. See "3.15 Refrigerant high pressure sensor" [▸ 284].

Possible cause: Faulty refrigerant high pressure sensor.

13 Perform a check of the indoor unit air thermistors. See service manual of the respective indoor unit(s) for more information.

Possible cause: Faulty indoor unit air thermistor(s).

14 Check all indoor units operation in heating mode. Check for room temperatures below 20°C. Check if caution disappears once rooms heat-up. If NOT, continue checking the cause of the wet operation.

Possible cause: Indoor room temperature too low when in heating mode. Too cold rooms might create more subcool resulting in wet operation.

> **INFORMATION**
> If all procedures listed above have been performed and the problem is still present, contact the helpdesk.

2.3.35 H3-02-04-06 – Transmission error between main PCB A1P and inverter PCB A3P

Main error code	Sub error code	Unit
H3	02	Main
	04	Sub 1
	06	Sub 2

> **INFORMATION**
> Main, Sub 1 and Sub 2 indications are relevant in multiple outdoor unit configurations. Main outdoor unit is the unit to which F1-F2 IN transmission line is connected. Main, Sub 1 and Sub 2 outdoor units can be identified by field setting 1-00.

Trigger	Effect	Reset
Transmission abnormality between outdoor unit main PCB and inverter PCB A3P.	Unit will stop operating.	Power reset at outdoor unit.

To solve the error code

> **INFORMATION**
> It is recommended to perform the checks in the listed order.

1 Check wiring between main PCB and inverter PCB.

2 Check if connector X40A is correctly inserted. See "6.2 Wiring diagram" [▸ 325].

Possible cause: Incorrect wiring.

3 Perform a check of the main PCB. See "3.9 Main PCB" [▸ 243].

Possible cause: Faulty main PCB.

4 Perform a check of the inverter PCB A3P. See "3.8 Inverter PCB" [▸ 225].

Possible cause: Faulty inverter PCB A3P.

> **INFORMATION**
> If all procedures listed above have been performed and the problem is still present, contact the helpdesk.

2.3.36 H3-03-05-07 – Transmission error on inverter PCB A6P

Main error code	Sub error code	Unit
H3	03	Main
	05	Sub 1
	07	Sub 2

> **INFORMATION**
> Main, Sub 1 and Sub 2 indications are relevant in multiple outdoor unit configurations. Main outdoor unit is the unit to which F1-F2 IN transmission line is connected. Main, Sub 1 and Sub 2 outdoor units can be identified by field setting 1-00.

Trigger	Effect	Reset
Transmission abnormality between outdoor unit main PCB and inverter PCB A6P.	Unit will stop operating.	Power reset at outdoor unit.

To solve the error code

> **INFORMATION**
> It is recommended to perform the checks in the listed order.

1 Check wiring main PCB and inverter PCB.

2 Check if connector X41A is correctly inserted. See "6.2 Wiring diagram" [▸ 325].

Possible cause: Incorrect wiring.

3 Perform a check of the main PCB. See "3.9 Main PCB" [▸ 243].

Possible cause: Faulty main PCB.

4 Perform a check of the inverter PCB A6P. See "3.8 Inverter PCB" [▸ 225].

Possible cause: Faulty inverter PCB A6P.

> **INFORMATION**
> If all procedures listed above have been performed and the problem is still present, contact the helpdesk.

2.3.37 H9-01-02-03 – Ambient temperature thermistor R1T abnormality

Main error code	Sub error code	Unit
H9	01	Main
	02	Sub 1
	03	Sub 2

INFORMATION

Main, Sub 1 and Sub 2 indications are relevant in multiple outdoor unit configurations. Main outdoor unit is the unit to which F1-F2 IN transmission line is connected. Main, Sub 1 and Sub 2 outdoor units can be identified by field setting 1-00.

Trigger	Effect	Reset
Ambient temperature thermistor R1T read-out is out of range.	Unit will stop operating.	Manual reset via user interface.
		Automatic reset when thermistor read-out is within range.

To solve the error code

INFORMATION

It is recommended to perform the checks in the listed order.

1 Perform a check of the outdoor air thermistor. See "3.17 Thermistors" [▸ 292].

Possible cause: Faulty ambient air thermistor.

2 Perform a check of the main PCB. See "3.9 Main PCB" [▸ 243].

Possible cause: Faulty main PCB.

INFORMATION

If all procedures listed above have been performed and the problem is still present, contact the helpdesk.

2.3.38 HA-00 – Defrost fail alarm

Trigger	Effect	Reset
When outdoor unit judges defrost is not completed.	Unit keeps running.	Auto reset.

To solve the error code

INFORMATION

It is recommended to perform the checks in the listed order.

1 Check the required space around the outdoor unit heat exchanger. See "4.3 External factors" [▸ 316].

Possible cause: Insufficient air flow or air by-pass due to required space specifications not met.

2 Clean the outdoor heat exchanger. See "5 Maintenance" [▸ 318].

Possible cause: Dirty outdoor heat exchanger.

3 Check if the refrigerant circuit is correctly charged. See "4.2 Refrigerant circuit" [▸ 306].

Possible cause: Refrigerant shortage.

4 Perform a check of the de–icer thermistor. See "3.17 Thermistors" [▸ 292].

Possible cause: Faulty de–icer thermistor or connector fault.

5 Perform a check of the refrigerant high pressure sensor. See "3.15 Refrigerant high pressure sensor" [▸ 284].

Possible cause: Faulty refrigerant high pressure sensor.

> **INFORMATION**
> If all procedures listed above have been performed and the problem is still present, contact the helpdesk.

2.3.39 J3-16-22-28 – Discharge thermistor R21T open circuit

Main error code	Sub error code	Unit
J3	16	Main
	22	Sub 1
	28	Sub 2

> **INFORMATION**
> Main, Sub 1 and Sub 2 indications are relevant in multiple outdoor unit configurations. Main outdoor unit is the unit to which F1-F2 IN transmission line is connected. Main, Sub 1 and Sub 2 outdoor units can be identified by field setting 1-00.

Trigger	Effect	Reset
Compressor (M1C) discharge thermistor R21T open circuit or out of range.	Unit will stop operating.	Manual reset via user interface.
		Automatic reset when thermistor read-out is within range.

To solve the error code

> **INFORMATION**
> It is recommended to perform the checks in the listed order.

1 Perform a check of the discharge pipe thermistor. See "3.17 Thermistors" [▸ 292].

Possible cause: Faulty discharge pipe thermistor or connector fault.

2 Perform a check of the main PCB. See "3.9 Main PCB" [▸ 243].

Possible cause: Faulty main PCB.

INFORMATION

If all procedures listed above have been performed and the problem is still present, contact the helpdesk.

2.3.40 J3-17-23-29 – Discharge thermistor R21T short circuit

Main error code	Sub error code	Unit
J3	17	Main
	23	Sub 1
	29	Sub 2

INFORMATION

Main, Sub 1 and Sub 2 indications are relevant in multiple outdoor unit configurations. Main outdoor unit is the unit to which F1-F2 IN transmission line is connected. Main, Sub 1 and Sub 2 outdoor units can be identified by field setting 1-00.

Trigger	Effect	Reset
Compressor (M1C) discharge thermistor R21T short circuit or out of range.	Unit will stop operating.	Manual reset via user interface.
		Automatic reset when thermistor read-out is within range.

To solve the error code

INFORMATION

It is recommended to perform the checks in the listed order.

1 Perform a check of the discharge pipe thermistor. See "3.17 Thermistors" [▸ 292].

Possible cause: Faulty discharge pipe thermistor or connector fault.

2 Perform a check of the main PCB. See "3.9 Main PCB" [▸ 243].

Possible cause: Faulty main PCB.

INFORMATION

If all procedures listed above have been performed and the problem is still present, contact the helpdesk.

2.3.41 J3-18-24-30 – Discharge thermistor R22T open circuit

Main error code	Sub error code	Unit
J3	18	Main
	24	Sub 1
	30	Sub 2

INFORMATION

Main, Sub 1 and Sub 2 indications are relevant in multiple outdoor unit configurations. Main outdoor unit is the unit to which F1-F2 IN transmission line is connected. Main, Sub 1 and Sub 2 outdoor units can be identified by field setting 1-00.

Trigger	Effect	Reset
Compressor (M2C) discharge thermistor R22T open circuit or out of range.	Unit will stop operating.	Manual reset via user interface.
		Automatic reset when thermistor read-out is within range.

To solve the error code

INFORMATION

It is recommended to perform the checks in the listed order.

1 Perform a check of the discharge pipe thermistor. See "3.17 Thermistors" [▸ 292].

Possible cause: Faulty discharge pipe thermistor or connector fault.

2 Perform a check of the main PCB. See "3.9 Main PCB" [▸ 243].

Possible cause: Faulty main PCB.

INFORMATION

If all procedures listed above have been performed and the problem is still present, contact the helpdesk.

2.3.42 J3-19-25-31 – Discharge thermistor R22T short circuit

Main error code	Sub error code	Unit
J3	19	Main
	25	Sub 1
	31	Sub 2

INFORMATION

Main, Sub 1 and Sub 2 indications are relevant in multiple outdoor unit configurations. Main outdoor unit is the unit to which F1-F2 IN transmission line is connected. Main, Sub 1 and Sub 2 outdoor units can be identified by field setting 1-00.

Trigger	Effect	Reset
Compressor (M2C) discharge thermistor R22T short circuit or out of range.	Unit will stop operating.	Manual reset via user interface.
		Automatic reset when thermistor read-out is within range.

To solve the error code

INFORMATION

It is recommended to perform the checks in the listed order.

1 Perform a check of the discharge pipe thermistor. See "3.17 Thermistors" [▸ 292].

Possible cause: Faulty discharge pipe thermistor or connector fault.

2 Perform a check of the main PCB. See "3.9 Main PCB" [▸ 243].

Possible cause: Faulty main PCB.

INFORMATION

If all procedures listed above have been performed and the problem is still present, contact the helpdesk.

2.3.43 J3-38-42-44 – Compressor body thermistor R9T open circuit

Main error code	Sub error code	Unit
J3	38	Main
	42	Sub 1
	44	Sub 2

INFORMATION

Main, Sub 1 and Sub 2 indications are relevant in multiple outdoor unit configurations. Main outdoor unit is the unit to which F1-F2 IN transmission line is connected. Main, Sub 1 and Sub 2 outdoor units can be identified by field setting 1-00.

Trigger	Effect	Reset
Compressor (M2C) body temperature thermistor R9T open circuit or out of range.	Unit will stop operating.	Manual reset via user interface.
		Automatic reset when thermistor read-out is within range.

To solve the error code

INFORMATION

It is recommended to perform the checks in the listed order.

1 Perform a check of the compressor body thermistors. See "3.17 Thermistors" [▸ 292].

Possible cause: Faulty compressor body thermistor or connector fault.

2 Perform a check of the main PCB. See "3.9 Main PCB" [▸ 243].

Possible cause: Faulty main PCB.

INFORMATION

If all procedures listed above have been performed and the problem is still present, contact the helpdesk.

2.3.44 J3-39-43-45 – Compressor body thermistor R9T short circuit

Main error code	Sub error code	Unit
J3	39	Main
	43	Sub 1
	45	Sub 2

INFORMATION

Main, Sub 1 and Sub 2 indications are relevant in multiple outdoor unit configurations. Main outdoor unit is the unit to which F1-F2 IN transmission line is connected. Main, Sub 1 and Sub 2 outdoor units can be identified by field setting 1-00.

Trigger	Effect	Reset
Compressor (M2C) body temperature thermistor R9T short circuit or out of range.	Unit will stop operating.	Manual reset via user interface.
		Automatic reset when thermistor read-out is within range.

To solve the error code

INFORMATION

It is recommended to perform the checks in the listed order.

1 Perform a check of the compressor body thermistors. See "3.17 Thermistors" [▸ 292].

Possible cause: Faulty compressor body thermistor or connector fault.

2 Perform a check of the main PCB. See "3.9 Main PCB" [▸ 243].

Possible cause: Faulty main PCB.

INFORMATION

If all procedures listed above have been performed and the problem is still present, contact the helpdesk.

2.3.45 J3-47-49-51 – Compressor body thermistor R8T open circuit

Main error code	Sub error code	Unit
J3	47	Main
	49	Sub 1
	51	Sub 2

INFORMATION

Main, Sub 1 and Sub 2 indications are relevant in multiple outdoor unit configurations. Main outdoor unit is the unit to which F1-F2 IN transmission line is connected. Main, Sub 1 and Sub 2 outdoor units can be identified by field setting 1-00.

Trigger	Effect	Reset
Compressor (M1C) body temperature thermistor R8T open circuit or out of range.	Unit will stop operating.	Manual reset via user interface.
		Automatic reset when thermistor read-out is within range.

To solve the error code

INFORMATION

It is recommended to perform the checks in the listed order.

1 Perform a check of the compressor body thermistors. See "3.17 Thermistors" [▶ 292].

Possible cause: Faulty compressor body thermistor or connector fault.

2 Perform a check of the main PCB. See "3.9 Main PCB" [▶ 243].

Possible cause: Faulty main PCB.

INFORMATION

If all procedures listed above have been performed and the problem is still present, contact the helpdesk.

2.3.46 J3-48-50-52 – Compressor body thermistor R8T short circuit

Main error code	Sub error code	Unit
J3	48	Main
	50	Sub 1
	52	Sub 2

INFORMATION

Main, Sub 1 and Sub 2 indications are relevant in multiple outdoor unit configurations. Main outdoor unit is the unit to which F1-F2 IN transmission line is connected. Main, Sub 1 and Sub 2 outdoor units can be identified by field setting 1-00.

Trigger	Effect	Reset
Compressor (M1C) body temperature thermistor R8T short circuit or out of range.	Unit will stop operating.	Manual reset via user interface.
		Automatic reset when thermistor read-out is within range.

To solve the error code

INFORMATION

It is recommended to perform the checks in the listed order.

1 Perform a check of the compressor body thermistors. See "3.17 Thermistors" [▸ 292].

Possible cause: Faulty compressor body thermistor or connector fault.

2 Perform a check of the main PCB. See "3.9 Main PCB" [▸ 243].

Possible cause: Faulty main PCB.

INFORMATION

If all procedures listed above have been performed and the problem is still present, contact the helpdesk.

2.3.47 J3-56-57-58 – High discharge temperature

Main error code	Sub error code	Unit
J3	56	Main
	57	Sub 1
	58	Sub 2

INFORMATION

Main, Sub 1 and Sub 2 indications are relevant in multiple outdoor unit configurations. Main outdoor unit is the unit to which F1-F2 IN transmission line is connected. Main, Sub 1 and Sub 2 outdoor units can be identified by field setting 1-00.

Trigger	Effect	Reset
Compressor discharge temperature (R21T and/or R22T) too high.	Unit keeps running.	Auto reset.

To solve the error code

INFORMATION

It is recommended to perform the checks in the listed order.

1 Perform a check of the discharge pipe thermistor. See "3.17 Thermistors" [▸ 292].

Possible cause: Faulty discharge pipe thermistor or connector fault.

2 Perform a check of the main expansion valve. See "3.5 Expansion valve" [▸ 201].

Possible cause: Faulty main expansion valve.

3 Perform a check of the subcool expansion valve. See "3.5 Expansion valve" [▸ 201].

Possible cause: Faulty subcool expansion valve.

4 Perform a check of the expansion valve(s) of the indoor unit(s). See service manual of the respective indoor unit(s) for more information.

Possible cause: Faulty indoor unit expansion valve.

5 Perform a check of the main PCB. See "3.9 Main PCB" [▶ 243].

Possible cause: Faulty main PCB.

6 Check if the refrigerant circuit is correctly charged. See "4.2 Refrigerant circuit" [▶ 306].

Possible cause: Refrigerant shortage.

> **INFORMATION**
> If all procedures listed above have been performed and the problem is still present, contact the helpdesk.

2.3.48 J3-59-60-61 – Discharge thermistor crosswired

Main error code	Sub error code	Unit
J3	59	Main
	60	Sub 1
	61	Sub 2

> **INFORMATION**
> Main, Sub 1 and Sub 2 indications are relevant in multiple outdoor unit configurations. Main outdoor unit is the unit to which F1-F2 IN transmission line is connected. Main, Sub 1 and Sub 2 outdoor units can be identified by field setting 1-00.

Trigger	Effect	Reset
Compressor (M1C) discharge thermistor and compressor (M2C) discharge thermistor are cross-wired.	Unit keeps running.	Auto reset.

To solve the error code

> **INFORMATION**
> It is recommended to perform the checks in the listed order.

1 Check the wiring of the discharge pipe thermistors on the main PCB. See "3.9 Main PCB" [▶ 243].

Possible cause: Discharge pipe thermistors are cross–wired.

> **INFORMATION**
> If all procedures listed above have been performed and the problem is still present, contact the helpdesk.

2.3.49 J5-01-03-05 – Compressor suction thermistor R3T malfunction

Main error code	Sub error code	Unit
J5	01	Main
	03	Sub 1
	05	Sub 2

INFORMATION

Main, Sub 1 and Sub 2 indications are relevant in multiple outdoor unit configurations. Main outdoor unit is the unit to which F1-F2 IN transmission line is connected. Main, Sub 1 and Sub 2 outdoor units can be identified by field setting 1-00.

Trigger	Effect	Reset
Suction (accumulator) temperature thermistor R3T short/open circuit or out of range.	Unit will stop operating.	Manual reset via user interface.
		Automatic reset when thermistor read-out is within range.

To solve the error code

INFORMATION

It is recommended to perform the checks in the listed order.

1 Perform a check of the suction pipe thermistor. See "3.17 Thermistors" [▸ 292].

Possible cause: Faulty suction pipe thermistor or connector fault.

2 Perform a check of the main PCB. See "3.9 Main PCB" [▸ 243].

Possible cause: Faulty main PCB.

INFORMATION

If all procedures listed above have been performed and the problem is still present, contact the helpdesk.

2.3.50 J6-01-02-03 – De–icer thermistor R7T abnormality

Main error code	Sub error code	Unit
J6	01	Main
	02	Sub 1
	03	Sub 2

INFORMATION

Main, Sub 1 and Sub 2 indications are relevant in multiple outdoor unit configurations. Main outdoor unit is the unit to which F1-F2 IN transmission line is connected. Main, Sub 1 and Sub 2 outdoor units can be identified by field setting 1-00.

Trigger	Effect	Reset
De-icer temperature thermistor R7T short/ open circuit or out of range.	Unit will stop operating.	Manual reset via user interface.
		Automatic reset when thermistor read-out is within range.

To solve the error code

INFORMATION

It is recommended to perform the checks in the listed order.

1 Perform a check of the de–icer thermistor. See "3.17 Thermistors" [▶ 292].

Possible cause: Faulty de–icer thermistor or connector fault.

2 Perform a check of the main PCB. See "3.9 Main PCB" [▶ 243].

Possible cause: Faulty main PCB.

INFORMATION

If all procedures listed above have been performed and the problem is still present, contact the helpdesk.

2.3.51 J7-06-07-08 – Liquid thermistor R5T abnormality

Main error code	Sub error code	Unit
J7	06	Main
	07	Sub 1
	08	Sub 2

INFORMATION

Main, Sub 1 and Sub 2 indications are relevant in multiple outdoor unit configurations. Main outdoor unit is the unit to which F1-F2 IN transmission line is connected. Main, Sub 1 and Sub 2 outdoor units can be identified by field setting 1-00.

Trigger	Effect	Reset
Refrigerant liquid thermistor R5T after subcool heat exchanger short/open circuit or out of range.	Unit will stop operating.	Manual reset via user interface.
		Automatic reset when thermistor read-out is within range.

To solve the error code

INFORMATION

It is recommended to perform the checks in the listed order.

1 Perform a check of the refrigerant liquid thermistor of the subcool heat exchanger. See "3.17 Thermistors" [▶ 292].

Possible cause: Faulty refrigerant liquid thermistor of the subcool heat exchanger or connector fault.

2 Perform a check of the main PCB. See "3.9 Main PCB" [▸ 243].

Possible cause: Faulty main PCB.

> **INFORMATION**
> If all procedures listed above have been performed and the problem is still present, contact the helpdesk.

2.3.52 J8-01-02-03 – Outdoor heat exchanger thermistor R4T abnormality

Main error code	Sub error code	Unit
J8	01	Main
	02	Sub 1
	03	Sub 2

> **INFORMATION**
> Main, Sub 1 and Sub 2 indications are relevant in multiple outdoor unit configurations. Main outdoor unit is the unit to which F1-F2 IN transmission line is connected. Main, Sub 1 and Sub 2 outdoor units can be identified by field setting 1-00.

Trigger	Effect	Reset
Outdoor heat exchanger refrigerant liquid thermistor R4T short/ open circuit or out of range.	Unit will stop operating.	Manual reset via user interface.
		Automatic reset when thermistor read-out is within range.

To solve the error code

> **INFORMATION**
> It is recommended to perform the checks in the listed order.

1 Perform a check of the refrigerant liquid thermistor of the outdoor heat exchanger. See "3.17 Thermistors" [▸ 292].

Possible cause: Faulty refrigerant liquid thermistor of the outdoor heat exchanger or connector fault.

2 Perform a check of the main PCB. See "3.9 Main PCB" [▸ 243].

Possible cause: Faulty main PCB.

> **INFORMATION**
> If all procedures listed above have been performed and the problem is still present, contact the helpdesk.

2.3.53 J9-01-02-03 – Gas thermistor R6T abnormality

Main error code	Sub error code	Unit
J9	01	Main
	02	Sub 1
	03	Sub 2

INFORMATION

Main, Sub 1 and Sub 2 indications are relevant in multiple outdoor unit configurations. Main outdoor unit is the unit to which F1-F2 IN transmission line is connected. Main, Sub 1 and Sub 2 outdoor units can be identified by field setting 1-00.

Trigger	Effect	Reset
Gas thermistor R6T after subcool heat exchanger short/open circuit or out of range.	Unit will stop operating.	Manual reset via user interface.
		Automatic reset when thermistor read-out is within range.

To solve the error code

INFORMATION

It is recommended to perform the checks in the listed order.

1 Perform a check of the gas pipe thermistor of the subcool heat exchanger. See "3.17 Thermistors" [▸ 292].

Possible cause: Faulty gas pipe thermistor of the subcool heat exchanger.

2 Perform a check of the main PCB. See "3.9 Main PCB" [▸ 243].

Possible cause: Faulty main PCB.

INFORMATION

If all procedures listed above have been performed and the problem is still present, contact the helpdesk.

2.3.54 JA-06-08-10 – High pressure sensor S1NPH abnormality

Main error code	Sub error code	Unit
JA	06	Main
	08	Sub 1
	10	Sub 2

INFORMATION

Main, Sub 1 and Sub 2 indications are relevant in multiple outdoor unit configurations. Main outdoor unit is the unit to which F1-F2 IN transmission line is connected. Main, Sub 1 and Sub 2 outdoor units can be identified by field setting 1-00.

Trigger	Effect	Reset
High pressure sensor S1NPH read-out open circuit or out of range.	Unit will stop operating.	Manual reset via user interface.
		Automatic reset when sensor read-out is within range.

To solve the error code

INFORMATION

It is recommended to perform the checks in the listed order.

1 Perform a check of the refrigerant high pressure sensor. See "3.15 Refrigerant high pressure sensor" [▸ 284].

Possible cause: Faulty refrigerant high pressure sensor.

2 Perform a check of the main PCB. See "3.9 Main PCB" [▸ 243].

Possible cause: Faulty main PCB.

INFORMATION

If all procedures listed above have been performed and the problem is still present, contact the helpdesk.

2.3.55 JA-07-09-11 – High pressure sensor S1NPH malfunction

Main error code	Sub error code	Unit
JA	07	Main
	09	Sub 1
	11	Sub 2

INFORMATION

Main, Sub 1 and Sub 2 indications are relevant in multiple outdoor unit configurations. Main outdoor unit is the unit to which F1-F2 IN transmission line is connected. Main, Sub 1 and Sub 2 outdoor units can be identified by field setting 1-00.

Trigger	Effect	Reset
High pressure sensor S1NPH read-out short circuit or out of range.	Unit will stop operating.	Manual reset via user interface.
		Automatic reset when sensor read-out is within range.

To solve the error code

INFORMATION

It is recommended to perform the checks in the listed order.

1 Perform a check of the refrigerant high pressure sensor. See "3.15 Refrigerant high pressure sensor" [▸ 284].

Possible cause: Faulty refrigerant high pressure sensor.

2 Perform a check of the main PCB. See "3.9 Main PCB" [▸ 243].

Possible cause: Faulty main PCB.

> **INFORMATION**
> If all procedures listed above have been performed and the problem is still present, contact the helpdesk.

2.3.56 JC-06-08-10 – Low pressure sensor S1NPL abnormality

Main error code	Sub error code	Unit
JC	06	Main
	08	Sub 1
	10	Sub 2

> **INFORMATION**
> Main, Sub 1 and Sub 2 indications are relevant in multiple outdoor unit configurations. Main outdoor unit is the unit to which F1-F2 IN transmission line is connected. Main, Sub 1 and Sub 2 outdoor units can be identified by field setting 1-00.

Trigger	Effect	Reset
Low pressure sensor S1NPL read-out open circuit or out of range.	Unit will stop operating.	Manual reset via user interface.
		Automatic reset when sensor read-out is within range.

To solve the error code

> **INFORMATION**
> It is recommended to perform the checks in the listed order.

1 Perform a check of the refrigerant low pressure sensor. See "3.16 Refrigerant low pressure sensor" [▸ 288]

Possible cause: Faulty refrigerant low pressure sensor.

2 Perform a check of the main PCB. See "3.9 Main PCB" [▸ 243].

Possible cause: Faulty main PCB.

> **INFORMATION**
> If all procedures listed above have been performed and the problem is still present, contact the helpdesk.

2.3.57 JC-07-09-11 – Low pressure sensor S1NPL malfunction

Main error code	Sub error code	Unit
JC	07	Main
	09	Sub 1
	11	Sub 2

INFORMATION

Main, Sub 1 and Sub 2 indications are relevant in multiple outdoor unit configurations. Main outdoor unit is the unit to which F1-F2 IN transmission line is connected. Main, Sub 1 and Sub 2 outdoor units can be identified by field setting 1-00.

Trigger	Effect	Reset
Low pressure sensor S1NPL read-out open circuit or out of range.	Unit will stop operating.	Manual reset via user interface.
		Automatic reset when sensor read-out is within range.

To solve the error code

INFORMATION

It is recommended to perform the checks in the listed order.

1. Perform a check of the refrigerant low pressure sensor. See "3.16 Refrigerant low pressure sensor" [▸ 288]

   Possible cause: Faulty refrigerant low pressure sensor.

2. Perform a check of the main PCB. See "3.9 Main PCB" [▸ 243].

   Possible cause: Faulty main PCB.

INFORMATION

If all procedures listed above have been performed and the problem is still present, contact the helpdesk.

2.3.58 L1-01-07-11 – Inverter PCB A3P abnormality

Main error code	Sub error code	Unit
L1	01	Main
	07	Sub 1
	11	Sub 2

INFORMATION

Main, Sub 1 and Sub 2 indications are relevant in multiple outdoor unit configurations. Main outdoor unit is the unit to which F1-F2 IN transmission line is connected. Main, Sub 1 and Sub 2 outdoor units can be identified by field setting 1-00.

Trigger	Effect	Reset
Main PCB detects voltage/ current errors on output waveform or current read-out.	Unit will stop operating.	Manual reset via user interface.
		Power reset at outdoor unit.

To solve the error code

INFORMATION

It is recommended to perform the checks in the listed order.

1 Perform a check of the main PCB. See "3.9 Main PCB" [▸ 243].

Possible cause: Faulty main PCB or wrong capacity setting.

2 Perform a check of the inverter PCB A3P. See "3.8 Inverter PCB" [▸ 225].

Possible cause: Faulty inverter PCB A3P or non-compatible inverter PCB.

3 Perform a check of the compressor. See "3.2 Compressor" [▸ 182].

Possible cause: Faulty compressor or miswiring of the compressor power supply cable.

4 Check if the power supply is compliant with the regulations. See "4.1 Electrical circuit" [▸ 299].

Possible cause:
- Faulty or disturbance of the power supply (power supply MUST be within range of nominal operating voltage ±4%),
- Power drop,
- Short circuit.

INFORMATION

If all procedures listed above have been performed and the problem is still present, contact the helpdesk.

2.3.59 L1-02-08-12 – Inverter PCB A3P current detection primary circuit

Main error code	Sub error code	Unit
L1	02	Main
	08	Sub 1
	12	Sub 2

INFORMATION

Main, Sub 1 and Sub 2 indications are relevant in multiple outdoor unit configurations. Main outdoor unit is the unit to which F1-F2 IN transmission line is connected. Main, Sub 1 and Sub 2 outdoor units can be identified by field setting 1-00.

Trigger	Effect	Reset
Main PCB detects voltage/ current errors on output waveform or current read-out.	Unit will stop operating.	Manual reset via user interface.
		Power reset at outdoor unit.

To solve the error code

INFORMATION

It is recommended to perform the checks in the listed order.

1 Perform a check of the main PCB. See "3.9 Main PCB" [▸ 243].

Possible cause: Faulty main PCB or wrong capacity setting.

2 Perform a check of the inverter PCB A3P. See "3.8 Inverter PCB" [▸ 225].

Possible cause: Faulty inverter PCB A3P or non-compatible inverter PCB.

3 Perform a check of the compressor. See "3.2 Compressor" [▸ 182].

Possible cause: Faulty compressor or miswiring of the compressor power supply cable.

4 Check if the power supply is compliant with the regulations. See "4.1 Electrical circuit" [▸ 299].

Possible cause:
- Faulty or disturbance of the power supply (power supply MUST be within range of nominal operating voltage ±4%),
- Power drop,
- Short circuit.

INFORMATION

If all procedures listed above have been performed and the problem is still present, contact the helpdesk.

2.3.60 L1-03-09-13 – Inverter PCB A3P current detection secondary circuit

Main error code	Sub error code	Unit
L1	03	Main
	09	Sub 1
	13	Sub 2

INFORMATION

Main, Sub 1 and Sub 2 indications are relevant in multiple outdoor unit configurations. Main outdoor unit is the unit to which F1-F2 IN transmission line is connected. Main, Sub 1 and Sub 2 outdoor units can be identified by field setting 1-00.

Trigger	Effect	Reset
Main PCB detects voltage/ current errors on output waveform or current read-out.	Unit will stop operating.	Manual reset via user interface.
		Power reset at outdoor unit.

To solve the error code

INFORMATION

It is recommended to perform the checks in the listed order.

1 Perform a check of the main PCB. See "3.9 Main PCB" [▸ 243].

Possible cause: Faulty main PCB or wrong capacity setting.

2 Perform a check of the inverter PCB A3P. See "3.8 Inverter PCB" [▸ 225].

Possible cause: Faulty inverter PCB A3P or non-compatible inverter PCB.

3 Perform a check of the compressor. See "3.2 Compressor" [▸ 182].

Possible cause: Faulty compressor or miswiring of the compressor power supply cable.

4 Check if the power supply is compliant with the regulations. See "4.1 Electrical circuit" [▸ 299].

Possible cause:
- Faulty or disturbance of the power supply (power supply MUST be within range of nominal operating voltage ±4%),
- Power drop,
- Short circuit.

INFORMATION

If all procedures listed above have been performed and the problem is still present, contact the helpdesk.

2.3.61 L1-04-10-14 – Power transistor error on inverter PCB A3P

Main error code	Sub error code	Unit
L1	04	Main
	10	Sub 1
	14	Sub 2

INFORMATION

Main, Sub 1 and Sub 2 indications are relevant in multiple outdoor unit configurations. Main outdoor unit is the unit to which F1-F2 IN transmission line is connected. Main, Sub 1 and Sub 2 outdoor units can be identified by field setting 1-00.

Trigger	Effect	Reset
Main PCB detects voltage/current errors on output waveform or current read-out.	Unit will stop operating.	Manual reset via user interface.
		Power reset at outdoor unit.

To solve the error code

INFORMATION

It is recommended to perform the checks in the listed order.

1 Perform a check of the main PCB. See "3.9 Main PCB" [▸ 243].

Possible cause: Faulty main PCB or wrong capacity setting.

2 Perform a check of the inverter PCB A3P. See "3.8 Inverter PCB" [▸ 225].

Possible cause: Faulty inverter PCB A3P or non-compatible inverter PCB.

3 Perform a check of the compressor. See "3.2 Compressor" [▸ 182].

Possible cause: Faulty compressor or miswiring of the compressor power supply cable.

4 Check if the power supply is compliant with the regulations. See "4.1 Electrical circuit" [▸ 299].

Possible cause:
- Faulty or disturbance of the power supply (power supply MUST be within range of nominal operating voltage ±4%),
- Power drop,
- Short circuit.

> **INFORMATION**
> If all procedures listed above have been performed and the problem is still present, contact the helpdesk.

2.3.62 L1-05-15-16 – Inverter PCB A3P hardware fault

Main error code	Sub error code	Unit
L1	05	Main
	15	Sub 1
	16	Sub 2

> **INFORMATION**
> Main, Sub 1 and Sub 2 indications are relevant in multiple outdoor unit configurations. Main outdoor unit is the unit to which F1-F2 IN transmission line is connected. Main, Sub 1 and Sub 2 outdoor units can be identified by field setting 1-00.

Trigger	Effect	Reset
Main PCB detects voltage/ current errors on output waveform or current read-out.	Unit will stop operating.	Manual reset via user interface.
		Power reset at outdoor unit.

To solve the error code

> **INFORMATION**
> It is recommended to perform the checks in the listed order.

1 Perform a check of the main PCB. See "3.9 Main PCB" [▸ 243].

Possible cause: Faulty main PCB or wrong capacity setting.

2 Perform a check of the inverter PCB A3P. See "3.8 Inverter PCB" [▸ 225].

Possible cause: Faulty inverter PCB A3P or non-compatible inverter PCB.

3 Perform a check of the compressor. See "3.2 Compressor" [▸ 182].

Possible cause: Faulty compressor or miswiring of the compressor power supply cable.

4 Check if the power supply is compliant with the regulations. See "4.1 Electrical circuit" [▸ 299].

Possible cause:
- Faulty or disturbance of the power supply (power supply MUST be within range of nominal operating voltage ±4%),
- Power drop,
- Short circuit.

> **INFORMATION**
> If all procedures listed above have been performed and the problem is still present, contact the helpdesk.

2.3.63 L1-17-22-42 – Inverter PCB A6P abnormality

Main error code	Sub error code	Unit
L1	17	Main
	22	Sub 1
	42	Sub 2

> **INFORMATION**
> Main, Sub 1 and Sub 2 indications are relevant in multiple outdoor unit configurations. Main outdoor unit is the unit to which F1-F2 IN transmission line is connected. Main, Sub 1 and Sub 2 outdoor units can be identified by field setting 1-00.

Trigger	Effect	Reset
Main PCB detects voltage/ current errors on output waveform or current read-out.	Unit will stop operating.	Manual reset via user interface.
		Power reset at outdoor unit.

To solve the error code

> **INFORMATION**
> It is recommended to perform the checks in the listed order.

1. Perform a check of the main PCB. See "3.9 Main PCB" [▸ 243].

   Possible cause: Faulty main PCB or wrong capacity setting.

2. Perform a check of the inverter PCB A6P. See "3.8 Inverter PCB" [▸ 225].

   Possible cause: Faulty inverter PCB A6P or non-compatible inverter PCB.

3. Perform a check of the compressor. See "3.2 Compressor" [▸ 182].

   Possible cause: Faulty compressor or miswiring of the compressor power supply cable.

4. Check if the power supply is compliant with the regulations. See "4.1 Electrical circuit" [▸ 299].

   Possible cause:
   - Faulty or disturbance of the power supply (power supply MUST be within range of nominal operating voltage ±4%),
   - Power drop,
   - Short circuit.

INFORMATION

If all procedures listed above have been performed and the problem is still present, contact the helpdesk.

2.3.64 L1-18-23-43 – Inverter PCB A6P current detection primary circuit

Main error code	Sub error code	Unit
L1	18	Main
	23	Sub 1
	43	Sub 2

INFORMATION

Main, Sub 1 and Sub 2 indications are relevant in multiple outdoor unit configurations. Main outdoor unit is the unit to which F1-F2 IN transmission line is connected. Main, Sub 1 and Sub 2 outdoor units can be identified by field setting 1-00.

Trigger	Effect	Reset
Main PCB detects voltage/ current errors on output waveform or current read-out.	Unit will stop operating.	Manual reset via user interface.
		Power reset at outdoor unit.

To solve the error code

INFORMATION

It is recommended to perform the checks in the listed order.

1. Perform a check of the main PCB. See "3.9 Main PCB" [▸ 243].

   Possible cause: Faulty main PCB or wrong capacity setting.

2. Perform a check of the inverter PCB A6P. See "3.8 Inverter PCB" [▸ 225].

   Possible cause: Faulty inverter PCB A6P or non-compatible inverter PCB.

3. Perform a check of the compressor. See "3.2 Compressor" [▸ 182].

   Possible cause: Faulty compressor or miswiring of the compressor power supply cable.

4. Check if the power supply is compliant with the regulations. See "4.1 Electrical circuit" [▸ 299].

   Possible cause:
   - Faulty or disturbance of the power supply (power supply MUST be within range of nominal operating voltage ±4%),
   - Power drop,
   - Short circuit.

INFORMATION

If all procedures listed above have been performed and the problem is still present, contact the helpdesk.

2.3.65 L1-19-24-44 – Inverter PCB A6P current detection secondary circuit

Main error code	Sub error code	Unit
L1	19	Main
	24	Sub 1
	44	Sub 2

INFORMATION

Main, Sub 1 and Sub 2 indications are relevant in multiple outdoor unit configurations. Main outdoor unit is the unit to which F1-F2 IN transmission line is connected. Main, Sub 1 and Sub 2 outdoor units can be identified by field setting 1-00.

Trigger	Effect	Reset
Main PCB detects voltage/ current errors on output waveform or current read-out.	Unit will stop operating.	Manual reset via user interface.
		Power reset at outdoor unit.

To solve the error code

INFORMATION

It is recommended to perform the checks in the listed order.

1. Perform a check of the main PCB. See "3.9 Main PCB" [▸ 243].

   Possible cause: Faulty main PCB or wrong capacity setting.

2. Perform a check of the inverter PCB A6P. See "3.8 Inverter PCB" [▸ 225].

   Possible cause: Faulty inverter PCB A6P or non-compatible inverter PCB.

3. Perform a check of the compressor. See "3.2 Compressor" [▸ 182].

   Possible cause: Faulty compressor or miswiring of the compressor power supply cable.

4. Check if the power supply is compliant with the regulations. See "4.1 Electrical circuit" [▸ 299].

   Possible cause:
   - Faulty or disturbance of the power supply (power supply MUST be within range of nominal operating voltage ±4%),
   - Power drop,
   - Short circuit.

INFORMATION

If all procedures listed above have been performed and the problem is still present, contact the helpdesk.

2.3.66 L1-20-25-45 – Power transistor error on inverter PCB A6P

Main error code	Sub error code	Unit
L1	20	Main
	25	Sub 1
	45	Sub 2

INFORMATION

Main, Sub 1 and Sub 2 indications are relevant in multiple outdoor unit configurations. Main outdoor unit is the unit to which F1-F2 IN transmission line is connected. Main, Sub 1 and Sub 2 outdoor units can be identified by field setting 1-00.

Trigger	Effect	Reset
Main PCB detects voltage/ current errors on output waveform or current read-out.	Unit will stop operating.	Manual reset via user interface.
		Power reset at outdoor unit.

To solve the error code

INFORMATION

It is recommended to perform the checks in the listed order.

1. Perform a check of the main PCB. See "3.9 Main PCB" [▸ 243].

   Possible cause: Faulty main PCB or wrong capacity setting.

2. Perform a check of the inverter PCB A6P. See "3.8 Inverter PCB" [▸ 225].

   Possible cause: Faulty inverter PCB A6P or non-compatible inverter PCB.

3. Perform a check of the compressor. See "3.2 Compressor" [▸ 182].

   Possible cause: Faulty compressor or miswiring of the compressor power supply cable.

4. Check if the power supply is compliant with the regulations. See "4.1 Electrical circuit" [▸ 299].

   Possible cause:
   - Faulty or disturbance of the power supply (power supply MUST be within range of nominal operating voltage ±4%),
   - Power drop,
   - Short circuit.

INFORMATION

If all procedures listed above have been performed and the problem is still present, contact the helpdesk.

2.3.67 L1-21-26-46 – Inverter PCB A6P hardware fault

Main error code	Sub error code	Unit
L1	21	Main
	26	Sub 1
	46	Sub 2

INFORMATION

Main, Sub 1 and Sub 2 indications are relevant in multiple outdoor unit configurations. Main outdoor unit is the unit to which F1-F2 IN transmission line is connected. Main, Sub 1 and Sub 2 outdoor units can be identified by field setting 1-00.

Trigger	Effect	Reset
Main PCB detects voltage/ current errors on output waveform or current read-out.	Unit will stop operating.	Manual reset via user interface.
		Power reset at outdoor unit.

To solve the error code

INFORMATION

It is recommended to perform the checks in the listed order.

1. Perform a check of the main PCB. See "3.9 Main PCB" [▸ 243].

   Possible cause: Faulty main PCB or wrong capacity setting.

2. Perform a check of the inverter PCB A6P. See "3.8 Inverter PCB" [▸ 225].

   Possible cause: Faulty inverter PCB A6P or non-compatible inverter PCB.

3. Perform a check of the compressor. See "3.2 Compressor" [▸ 182].

   Possible cause: Faulty compressor or miswiring of the compressor power supply cable.

4. Check if the power supply is compliant with the regulations. See "4.1 Electrical circuit" [▸ 299].

   Possible cause:
   - Faulty or disturbance of the power supply (power supply MUST be within range of nominal operating voltage ±4%),
   - Power drop,
   - Short circuit.

INFORMATION

If all procedures listed above have been performed and the problem is still present, contact the helpdesk.

2.3.68 L1-28-32-34 – Fan inverter PCB A4P Eeprom error

Main error code	Sub error code	Unit
L1	28	Main
	32	Sub 1
	34	Sub 2

INFORMATION

Main, Sub 1 and Sub 2 indications are relevant in multiple outdoor unit configurations. Main outdoor unit is the unit to which F1-F2 IN transmission line is connected. Main, Sub 1 and Sub 2 outdoor units can be identified by field setting 1-00.

Trigger	Effect	Reset
Fan inverter PCB A4P fails reading/writing memory (EEPROM error).	Unit will stop operating.	Manual reset via user interface.
		Power reset at outdoor unit.

To solve the error code

INFORMATION

It is recommended to perform the checks in the listed order.

1 Perform a check of the fan inverter PCB A4P. See "3.6 Fan inverter PCB" [▸ 210].

Possible cause: Faulty fan inverter PCB A4P.

INFORMATION

If all procedures listed above have been performed and the problem is still present, contact the helpdesk.

2.3.69 L1-29-33-35 – Fan inverter PCB A7P Eeprom error

Main error code	Sub error code	Unit
L1	29	Main
	33	Sub 1
	35	Sub 2

INFORMATION

Main, Sub 1 and Sub 2 indications are relevant in multiple outdoor unit configurations. Main outdoor unit is the unit to which F1-F2 IN transmission line is connected. Main, Sub 1 and Sub 2 outdoor units can be identified by field setting 1-00.

Trigger	Effect	Reset
Fan inverter PCB A7P fails reading/writing memory (EEPROM error).	Unit will stop operating.	Manual reset via user interface.
		Power reset at outdoor unit.

To solve the error code

INFORMATION

It is recommended to perform the checks in the listed order.

1 Perform a check of the fan inverter PCB A7P. See "3.6 Fan inverter PCB" [▸ 210].

Possible cause: Faulty fan inverter PCB A7P.

INFORMATION

If all procedures listed above have been performed and the problem is still present, contact the helpdesk.

2.3.70 L1-36-38-40 – Inverter PCB A3P Eeprom error

Main error code	Sub error code	Unit
L1	36	Main
	38	Sub 1
	40	Sub 2

INFORMATION

Main, Sub 1 and Sub 2 indications are relevant in multiple outdoor unit configurations. Main outdoor unit is the unit to which F1-F2 IN transmission line is connected. Main, Sub 1 and Sub 2 outdoor units can be identified by field setting 1-00.

Trigger	Effect	Reset
Inverter PCB A3P fails reading/writing memory (EEPROM error).	Unit will stop operating.	Manual reset via user interface.
		Power reset at outdoor unit.

To solve the error code

INFORMATION

It is recommended to perform the checks in the listed order.

1 Perform a check of the inverter PCB A3P. See "3.8 Inverter PCB" [▸ 225].

Possible cause: Faulty inverter PCB A3P or non-compatible inverter PCB.

INFORMATION

If all procedures listed above have been performed and the problem is still present, contact the helpdesk.

2.3.71 L1-37-39-41 – Inverter PCB A6P Eeprom error

Main error code	Sub error code	Unit
L1	37	Main
	39	Sub 1
	41	Sub 2

INFORMATION

Main, Sub 1 and Sub 2 indications are relevant in multiple outdoor unit configurations. Main outdoor unit is the unit to which F1-F2 IN transmission line is connected. Main, Sub 1 and Sub 2 outdoor units can be identified by field setting 1-00.

Trigger	Effect	Reset
Inverter PCB A6P fails reading/writing memory (EEPROM error).	Unit will stop operating.	Manual reset via user interface.
		Power reset at outdoor unit.

To solve the error code

INFORMATION

It is recommended to perform the checks in the listed order.

1 Perform a check of the inverter PCB A6P. See "3.8 Inverter PCB" [▸ 225].

Possible cause: Faulty inverter PCB A6P or non-compatible inverter PCB.

INFORMATION

If all procedures listed above have been performed and the problem is still present, contact the helpdesk.

2.3.72 L1-47-49-51 – Inverter PCB A3P 16 V DC abnormal

Main error code	Sub error code	Unit
L1	47	Main
	49	Sub 1
	51	Sub 2

INFORMATION

Main, Sub 1 and Sub 2 indications are relevant in multiple outdoor unit configurations. Main outdoor unit is the unit to which F1-F2 IN transmission line is connected. Main, Sub 1 and Sub 2 outdoor units can be identified by field setting 1-00.

Trigger	Effect	Reset
Main PCB detects voltage/current errors on output waveform or current read-out.	Unit will stop operating.	Manual reset via user interface.
		Power reset at outdoor unit.

To solve the error code

INFORMATION

It is recommended to perform the checks in the listed order.

1 Perform a check of the main PCB. See "3.9 Main PCB" [▸ 243].

Possible cause: Faulty main PCB or wrong capacity setting.

2 Perform a check of the inverter PCB A3P. See "3.8 Inverter PCB" [▸ 225].

Possible cause: Faulty inverter PCB A3P or non-compatible inverter PCB.

3 Perform a check of the compressor. See "3.2 Compressor" [▸ 182].

Possible cause: Faulty compressor or miswiring of the compressor power supply cable.

4 Check if the power supply is compliant with the regulations. See "4.1 Electrical circuit" [▸ 299].

Possible cause:
- Faulty or disturbance of the power supply (power supply MUST be within range of nominal operating voltage ±4%),
- Power drop,
- Short circuit.

INFORMATION

If all procedures listed above have been performed and the problem is still present, contact the helpdesk.

2.3.73 L1-48-50-52 – Inverter PCB A6P 16 V DC abnormal

Main error code	Sub error code	Unit
L1	48	Main
	50	Sub 1
	52	Sub 2

INFORMATION

Main, Sub 1 and Sub 2 indications are relevant in multiple outdoor unit configurations. Main outdoor unit is the unit to which F1-F2 IN transmission line is connected. Main, Sub 1 and Sub 2 outdoor units can be identified by field setting 1-00.

Trigger	Effect	Reset
Main PCB detects voltage/current errors on output waveform or current read-out.	Unit will stop operating.	Manual reset via user interface.
		Power reset at outdoor unit.

To solve the error code

INFORMATION

It is recommended to perform the checks in the listed order.

1 Perform a check of the main PCB. See "3.9 Main PCB" [▸ 243].

Possible cause: Faulty main PCB or wrong capacity setting.

2 Perform a check of the inverter PCB A6P. See "3.8 Inverter PCB" [▸ 225].

Possible cause: Faulty inverter PCB A6P or non-compatible inverter PCB.

3 Perform a check of the compressor. See "3.2 Compressor" [▸ 182].

Possible cause: Faulty compressor or miswiring of the compressor power supply cable.

4 Check if the power supply is compliant with the regulations. See "4.1 Electrical circuit" [▸ 299].

Possible cause:
- Faulty or disturbance of the power supply (power supply MUST be within range of nominal operating voltage ±4%),
- Power drop,
- Short circuit.

INFORMATION

If all procedures listed above have been performed and the problem is still present, contact the helpdesk.

2.3.74 L2-01-02-03 – Power supply abnormality during test run

Main error code	Sub error code	Unit
L2	01	Main
	02	Sub 1
	03	Sub 2

INFORMATION

Main, Sub 1 and Sub 2 indications are relevant in multiple outdoor unit configurations. Main outdoor unit is the unit to which F1-F2 IN transmission line is connected. Main, Sub 1 and Sub 2 outdoor units can be identified by field setting 1-00.

Trigger	Effect	Reset
Main PCB detects 50 Hz zero-crossing error.	Unit stops and retries after guard timer (3 minutes) - infinite cycle.	Automatic reset when within zero-crossing interval range.
		Power reset at outdoor unit.

To solve the error code

INFORMATION

It is recommended to perform the checks in the listed order.

INFORMATION

Main PCB checks L1-N on connector X1A for sinus waveform each time crossing the zero-line. Interval between each zero-crossing is 10 miliseconds when the power supply is 50 Hz.

1 Check if the power supply is compliant with the regulations. See "4.1 Electrical circuit" [▸ 299].

Possible cause:
- Faulty or disturbance of the power supply (power supply MUST be within range of nominal operating voltage ±4%),
- Power drop,
- Short circuit.

2 Perform a check of the main PCB. See "3.9 Main PCB" [▸ 243].

Possible cause: Faulty main PCB.

3 Perform a check of the inverter PCB(s). See "3.8 Inverter PCB" [▸ 225].

Possible cause: Faulty inverter PCB(s).

> **INFORMATION**
> If all procedures listed above have been performed and the problem is still present, contact the helpdesk.

2.3.75 L2-04-05-06 – Power supply abnormality during normal operation

Main error code	Sub error code	Unit
L2	04	Main
	05	Sub 1
	06	Sub 2

> **INFORMATION**
> Main, Sub 1 and Sub 2 indications are relevant in multiple outdoor unit configurations. Main outdoor unit is the unit to which F1-F2 IN transmission line is connected. Main, Sub 1 and Sub 2 outdoor units can be identified by field setting 1-00.

Trigger	Effect	Reset
Main PCB detects 50 Hz zero-crossing error.	Unit stops and retries after guard timer (3 minutes) - infinite cycle.	Automatic reset when within zero-crossing interval range.
		Power reset at outdoor unit.

To solve the error code

> **INFORMATION**
> It is recommended to perform the checks in the listed order.

> **INFORMATION**
> Main PCB checks L1-N on connector X1A for sinus waveform each time crossing the zero-line. Interval between each zero-crossing is 10 miliseconds when the power supply is 50 Hz.

1 Check if the power supply is compliant with the regulations. See "4.1 Electrical circuit" [▸ 299].

Possible cause:
- Faulty or disturbance of the power supply (power supply MUST be within range of nominal operating voltage ±4%),
- Power drop,
- Short circuit.

2 Perform a check of the main PCB. See "3.9 Main PCB" [▸ 243].

Possible cause: Faulty main PCB.

3 Perform a check of the inverter PCB(s). See "3.8 Inverter PCB" [▸ 225].

Possible cause: Faulty inverter PCB(s).

> **INFORMATION**
> If all procedures listed above have been performed and the problem is still present, contact the helpdesk.

2.3.76 L4-01-02-03 – Inverter PCB A3P high fin temperature

Main error code	Sub error code	Unit
L4	01	Main
	02	Sub 1
	03	Sub 2

> **INFORMATION**
> Main, Sub 1 and Sub 2 indications are relevant in multiple outdoor unit configurations. Main outdoor unit is the unit to which F1-F2 IN transmission line is connected. Main, Sub 1 and Sub 2 outdoor units can be identified by field setting 1-00.

Trigger	Effect	Reset
Thermistor located inside the power module of the inverter PCB for compressor detects a temperature higher than a certain value.	Unit will stop operating.	Manual reset via remote controller. Outdoor unit power reset.

To solve the error code

> **INFORMATION**
> It is recommended to perform the checks in the listed order.

Prerequisite: Stop the unit operation via the central controller.

Prerequisite: Turn OFF the respective circuit breaker.

1 Wait until the rectifier voltage is below 10 V DC.

> **DANGER: RISK OF ELECTROCUTION**
> Confirm the rectifier voltage is below 10 V DC before proceeding, see "To prevent electrical hazards" [▸ 299].

2 Check that the thermal interface grease is applied properly on the (PCB or refrigerant piping) contact surface of the heat sink. Adjust if needed.

Possible cause: Thermal interface grease NOT applied properly on the heat sink.

3 Check if heat sink plate is correctly fixed with screws.

Possible cause: Heat sink plate not correctly installed.

4 Check (by touching) if refrigerant is flowing through the radiant cooling refrigerant circuit. The radiant cooling refrigerant circuit should be warm if refrigerant is flowing. If no refrigerant flow, perform a check of the liquid cooling expansion valve, see "3.5 Expansion valve" [▶ 201].

Possible cause: No refrigerant flow through the radiant cooling refrigerant circuit.

5 Perform a check of the liquid cooling expansion valve. See "3.5 Expansion valve" [▶ 201].

Possible cause: Faulty liquid cooling expansion valve.

6 Check ambient temperature. Check if outdoor unit location temperature differs drastically.

7 Check if there is discharge air by-pass on installation location.

Possible cause: External noise. Check further on how to eliminate external factors.

8 Perform a check of the inverter PCB A3P. See "3.8 Inverter PCB" [▶ 225].

Possible cause: Faulty inverter PCB A3P.

INFORMATION

If all procedures listed above have been performed and the problem is still present, contact the helpdesk.

2.3.77 L4-06-18-20 – Fan inverter PCB A4P high fin temperature

Main error code	Sub error code	Unit
L4	06	Main
	18	Sub 1
	20	Sub 2

INFORMATION

Main, Sub 1 and Sub 2 indications are relevant in multiple outdoor unit configurations. Main outdoor unit is the unit to which F1-F2 IN transmission line is connected. Main, Sub 1 and Sub 2 outdoor units can be identified by field setting 1-00.

Trigger	Effect	Reset
Thermistor located inside the power module of the fan inverter PCB detects a temperature higher than a certain value.	Unit will stop operating.	Manual reset via remote controller. Outdoor unit power reset.

To solve the error code

INFORMATION

It is recommended to perform the checks in the listed order.

Prerequisite: Stop the unit operation via the central controller.

Prerequisite: Turn OFF the respective circuit breaker.

1 Wait until the rectifier voltage is below 10 V DC.

DANGER: RISK OF ELECTROCUTION

Confirm the rectifier voltage is below 10 V DC before proceeding, see "To prevent electrical hazards" [▸ 299].

2 Check that the thermal interface grease is applied properly on the (PCB or refrigerant piping) contact surface of the heat sink. Adjust if needed.

Possible cause: Thermal interface grease NOT applied properly on the heat sink.

3 Check if heat sink plate is correctly fixed with screws.

Possible cause: Heat sink plate not correctly installed.

4 Check (by touching) if refrigerant is flowing through the radiant cooling refrigerant circuit. The radiant cooling refrigerant circuit should be warm if refrigerant is flowing. If no refrigerant flow, perform a check of the liquid cooling expansion valve, see "3.5 Expansion valve" [▸ 201].

Possible cause: No refrigerant flow through the radiant cooling refrigerant circuit.

5 Perform a check of the liquid cooling expansion valve. See "3.5 Expansion valve" [▸ 201].

Possible cause: Faulty liquid cooling expansion valve.

6 Check ambient temperature. Check if outdoor unit location temperature differs drastically.

7 Check if there is discharge air by-pass on installation location.

Possible cause: External noise. Check further on how to eliminate external factors.

8 Perform a check of the fan inverter PCB A4P. See "3.6 Fan inverter PCB" [▸ 210].

Possible cause: Faulty fan inverter PCB A4P.

INFORMATION

If all procedures listed above have been performed and the problem is still present, contact the helpdesk.

2.3.78 L4-07-19-21 – Fan inverter PCB A7P high fin temperature

Main error code	Sub error code	Unit
L4	07	Main
	19	Sub 1
	21	Sub 2

INFORMATION

Main, Sub 1 and Sub 2 indications are relevant in multiple outdoor unit configurations. Main outdoor unit is the unit to which F1-F2 IN transmission line is connected. Main, Sub 1 and Sub 2 outdoor units can be identified by field setting 1-00.

Trigger	Effect	Reset
Thermistor located inside the power module of the fan inverter PCB detects a temperature higher than a certain value.	Unit will stop operating.	Manual reset via remote controller. Outdoor unit power reset.

To solve the error code

INFORMATION

It is recommended to perform the checks in the listed order.

Prerequisite: Stop the unit operation via the central controller.

Prerequisite: Turn OFF the respective circuit breaker.

1 Wait until the rectifier voltage is below 10 V DC.

DANGER: RISK OF ELECTROCUTION

Confirm the rectifier voltage is below 10 V DC before proceeding, see "To prevent electrical hazards" [▸ 299].

2 Check that the thermal interface grease is applied properly on the (PCB or refrigerant piping) contact surface of the heat sink. Adjust if needed.

Possible cause: Thermal interface grease NOT applied properly on the heat sink.

3 Check if heat sink plate is correctly fixed with screws.

Possible cause: Heat sink plate not correctly installed.

4 Check (by touching) if refrigerant is flowing through the radiant cooling refrigerant circuit. The radiant cooling refrigerant circuit should be warm if refrigerant is flowing. If no refrigerant flow, perform a check of the liquid cooling expansion valve, see "3.5 Expansion valve" [▸ 201].

Possible cause: No refrigerant flow through the radiant cooling refrigerant circuit.

5 Perform a check of the liquid cooling expansion valve. See "3.5 Expansion valve" [▸ 201].

Possible cause: Faulty liquid cooling expansion valve.

6 Check ambient temperature. Check if outdoor unit location temperature differs drastically.

7 Check if there is discharge air by-pass on installation location.

Possible cause: External noise. Check further on how to eliminate external factors.

8 Perform a check of the fan inverter PCB A7P. See "3.6 Fan inverter PCB" [▸ 210].

Possible cause: Faulty fan inverter PCB A7P.

INFORMATION

If all procedures listed above have been performed and the problem is still present, contact the helpdesk.

2.3.79 L4-09-10-11 – Inverter PCB A6P high fin temperature

Main error code	Sub error code	Unit
L4	09	Main
	10	Sub 1
	11	Sub 2

INFORMATION

Main, Sub 1 and Sub 2 indications are relevant in multiple outdoor unit configurations. Main outdoor unit is the unit to which F1-F2 IN transmission line is connected. Main, Sub 1 and Sub 2 outdoor units can be identified by field setting 1-00.

Trigger	Effect	Reset
Thermistor located inside the power module of the inverter PCB for compressor detects a temperature higher than a certain value.	Unit will stop operating.	Manual reset via remote controller. Outdoor unit power reset.

To solve the error code

INFORMATION

It is recommended to perform the checks in the listed order.

Prerequisite: Stop the unit operation via the central controller.

Prerequisite: Turn OFF the respective circuit breaker.

1 Wait until the rectifier voltage is below 10 V DC.

DANGER: RISK OF ELECTROCUTION

Confirm the rectifier voltage is below 10 V DC before proceeding, see "To prevent electrical hazards" [▸ 299].

2 Check that the thermal interface grease is applied properly on the (PCB or refrigerant piping) contact surface of the heat sink. Adjust if needed.

Possible cause: Thermal interface grease NOT applied properly on the heat sink.

3 Check if heat sink plate is correctly fixed with screws.

Possible cause: Heat sink plate not correctly installed.

4 Check (by touching) if refrigerant is flowing through the radiant cooling refrigerant circuit. The radiant cooling refrigerant circuit should be warm if refrigerant is flowing. If no refrigerant flow, perform a check of the liquid cooling expansion valve, see "3.5 Expansion valve" [▸ 201].

Possible cause: No refrigerant flow through the radiant cooling refrigerant circuit.

5 Perform a check of the liquid cooling expansion valve. See "3.5 Expansion valve" [▸ 201].

Possible cause: Faulty liquid cooling expansion valve.

6 Check ambient temperature. Check if outdoor unit location temperature differs drastically.

7 Check if there is discharge air by-pass on installation location.

Possible cause: External noise. Check further on how to eliminate external factors.

8 Perform a check of the inverter PCB A6P. See "3.8 Inverter PCB" [▸ 225].

Possible cause: Faulty inverter PCB A6P.

> **INFORMATION**
> If all procedures listed above have been performed and the problem is still present, contact the helpdesk.

2.3.80 L5-03-05-07 – Output overcurrent detection on inverter PCB A3P

Main error code	Sub error code	Unit
L5	03	Main
	05	Sub 1
	07	Sub 2

> **INFORMATION**
> Main, Sub 1 and Sub 2 indications are relevant in multiple outdoor unit configurations. Main outdoor unit is the unit to which F1-F2 IN transmission line is connected. Main, Sub 1 and Sub 2 outdoor units can be identified by field setting 1-00.

Trigger	Effect	Reset
Inverter PCB A3P detects overcurrent to power transistor.	Unit will stop operating.	Manual reset via user interface.

To solve the error code

> **INFORMATION**
> It is recommended to perform the checks in the listed order.

1 Check if the power supply is compliant with the regulations. See "4.1 Electrical circuit" [▸ 299].

Possible cause:
- Faulty or disturbance of the power supply (power supply MUST be within range of nominal operating voltage ±4%),
- Power drop,
- Short circuit.

2 Check if the refrigerant circuit is clogged. See "4.2 Refrigerant circuit" [▸ 306].

Possible cause: Clogged refrigerant circuit.

3 Check that all stop valves of the refrigerant circuit are open. See "4.2 Refrigerant circuit" [▸ 306].

Possible cause: Closed stop valve in the refrigerant circuit.

4 Check for the presence of non-condensables and/or humidity in the refrigerant circuit. See "4.2 Refrigerant circuit" [▸ 306].

Possible cause: Non-condensables and/or humidity in the refrigerant circuit.

5 Perform a check of the inverter PCB A3P. See "3.8 Inverter PCB" [▸ 225].

Possible cause: Faulty inverter PCB A3P.

6 Perform a check of the compressor M1C. See "3.2 Compressor" [▸ 182].

Possible cause: Faulty compressor M1C or miswiring of the compressor power supply cable.

> **INFORMATION**
> If all procedures listed above have been performed and the problem is still present, contact the helpdesk.

2.3.81 L5-14-15-16 – Output overcurrent detection on inverter PCB A6P

Main error code	Sub error code	Unit
L5	14	Main
	15	Sub 1
	16	Sub 2

> **INFORMATION**
> Main, Sub 1 and Sub 2 indications are relevant in multiple outdoor unit configurations. Main outdoor unit is the unit to which F1-F2 IN transmission line is connected. Main, Sub 1 and Sub 2 outdoor units can be identified by field setting 1-00.

Trigger	Effect	Reset
Inverter PCB A6P detects overcurrent to power transistor.	Unit will stop operating.	Manual reset via user interface.

To solve the error code

> **INFORMATION**
> It is recommended to perform the checks in the listed order.

1 Check if the power supply is compliant with the regulations. See "4.1 Electrical circuit" [▸ 299].

Possible cause:
- Faulty or disturbance of the power supply (power supply MUST be within range of nominal operating voltage ±4%),
- Power drop,
- Short circuit.

2 Check if the refrigerant circuit is clogged. See "4.2 Refrigerant circuit" [▸ 306].

Possible cause: Clogged refrigerant circuit.

3 Check that all stop valves of the refrigerant circuit are open. See "4.2 Refrigerant circuit" [▶ 306].

Possible cause: Closed stop valve in the refrigerant circuit.

4 Check for the presence of non-condensables and/or humidity in the refrigerant circuit. See "4.2 Refrigerant circuit" [▶ 306].

Possible cause: Non-condensables and/or humidity in the refrigerant circuit.

5 Perform a check of the inverter PCB A6P. See "3.8 Inverter PCB" [▶ 225].

Possible cause: Faulty inverter PCB A6P.

6 Perform a check of the compressor M2C. See "3.2 Compressor" [▶ 182].

Possible cause: Faulty compressor M2C or miswiring of the compressor power supply cable.

> **INFORMATION**
> If all procedures listed above have been performed and the problem is still present, contact the helpdesk.

2.3.82 L8-03-06-07 – Overcurrent on inverter PCB A3P except start-up

Main error code	Sub error code	Unit
L8	03	Main
	06	Sub 1
	07	Sub 2

> **INFORMATION**
> Main, Sub 1 and Sub 2 indications are relevant in multiple outdoor unit configurations. Main outdoor unit is the unit to which F1-F2 IN transmission line is connected. Main, Sub 1 and Sub 2 outdoor units can be identified by field setting 1-00.

Trigger	Effect	Reset
Inverter PCB A3P detects overcurrent to compressor except on start-up.	Unit will stop operating.	Manual reset via user interface.

To solve the error code

> **INFORMATION**
> It is recommended to perform the checks in the listed order.

1 Check if the power supply is compliant with the regulations. See "4.1 Electrical circuit" [▶ 299].

Possible cause:
- Faulty or disturbance of the power supply (power supply MUST be within range of nominal operating voltage ±4%),
- Power drop,
- Short circuit.

2 Check if the refrigerant circuit is clogged. See "4.2 Refrigerant circuit" [▶ 306].

Possible cause: Clogged refrigerant circuit.

3 Check that all stop valves of the refrigerant circuit are open. See "4.2 Refrigerant circuit" [▶ 306].

Possible cause: Closed stop valve in the refrigerant circuit.

4 Check for the presence of non-condensables and/or humidity in the refrigerant circuit. See "4.2 Refrigerant circuit" [▶ 306].

Possible cause: Non-condensables and/or humidity in the refrigerant circuit.

5 Perform a check of the inverter PCB A3P. See "3.8 Inverter PCB" [▶ 225].

Possible cause: Faulty inverter PCB A3P.

6 Perform a check of the compressor M1C. See "3.2 Compressor" [▶ 182].

Possible cause: Faulty compressor M1C or miswiring of the compressor power supply cable.

INFORMATION

If all procedures listed above have been performed and the problem is still present, contact the helpdesk.

2.3.83 L8-11-12-13 – Overcurrent on inverter PCB A6P except start-up

Main error code	Sub error code	Unit
L8	11	Main
	12	Sub 1
	13	Sub 2

INFORMATION

Main, Sub 1 and Sub 2 indications are relevant in multiple outdoor unit configurations. Main outdoor unit is the unit to which F1-F2 IN transmission line is connected. Main, Sub 1 and Sub 2 outdoor units can be identified by field setting 1-00.

Trigger	Effect	Reset
Inverter PCB A6P detects overcurrent to compressor except on start-up.	Unit will stop operating.	Manual reset via user interface.

To solve the error code

INFORMATION

It is recommended to perform the checks in the listed order.

1 Check if the power supply is compliant with the regulations. See "4.1 Electrical circuit" [▶ 299].

Possible cause:
- Faulty or disturbance of the power supply (power supply MUST be within range of nominal operating voltage ±4%),
- Power drop,
- Short circuit.

2 Check if the refrigerant circuit is clogged. See "4.2 Refrigerant circuit" [▶ 306].

Possible cause: Clogged refrigerant circuit.

3 Check that all stop valves of the refrigerant circuit are open. See "4.2 Refrigerant circuit" [▶ 306].

Possible cause: Closed stop valve in the refrigerant circuit.

4 Check for the presence of non-condensables and/or humidity in the refrigerant circuit. See "4.2 Refrigerant circuit" [▶ 306].

Possible cause: Non-condensables and/or humidity in the refrigerant circuit.

5 Perform a check of the inverter PCB A6P. See "3.8 Inverter PCB" [▶ 225].

Possible cause: Faulty inverter PCB A6P.

6 Perform a check of the compressor M2C. See "3.2 Compressor" [▶ 182].

Possible cause: Faulty compressor M2C or miswiring of the compressor power supply cable.

> **INFORMATION**
> If all procedures listed above have been performed and the problem is still present, contact the helpdesk.

2.3.84 L9-01-05-06 – Stall prevention by inverter PCB A3P

Main error code	Sub error code	Unit
L9	01	Main
	05	Sub 1
	06	Sub 2

> **INFORMATION**
> Main, Sub 1 and Sub 2 indications are relevant in multiple outdoor unit configurations. Main outdoor unit is the unit to which F1-F2 IN transmission line is connected. Main, Sub 1 and Sub 2 outdoor units can be identified by field setting 1-00.

Trigger	Effect	Reset
Inverter PCB A3P detects overcurrent or no rotation at start-up.	Unit will stop operating.	Manual reset via user interface.

To solve the error code

> **INFORMATION**
> It is recommended to perform the checks in the listed order.

1 Check if the power supply is compliant with the regulations. See "4.1 Electrical circuit" [▶ 299].

Possible cause:
- Faulty or disturbance of the power supply (power supply MUST be within range of nominal operating voltage ±4%),
- Power drop,
- Short circuit.

2 Check if the refrigerant circuit is clogged. See "4.2 Refrigerant circuit" [▶ 306].

Possible cause: Clogged refrigerant circuit.

3 Perform a check of the inverter PCB A3P. See "3.8 Inverter PCB" [▶ 225].

Possible cause: Faulty inverter PCB A3P.

4 Perform a check of the compressor M1C. See "3.2 Compressor" [▶ 182].

Possible cause: Faulty compressor M1C or miswiring of the compressor power supply cable.

INFORMATION

If all procedures listed above have been performed and the problem is still present, contact the helpdesk.

2.3.85 L9-10-11-12 – Stall prevention by inverter PCB A6P

Main error code	Sub error code	Unit
L9	10	Main
	11	Sub 1
	12	Sub 2

INFORMATION

Main, Sub 1 and Sub 2 indications are relevant in multiple outdoor unit configurations. Main outdoor unit is the unit to which F1-F2 IN transmission line is connected. Main, Sub 1 and Sub 2 outdoor units can be identified by field setting 1-00.

Trigger	Effect	Reset
Inverter PCB A6P detects overcurrent or no rotation at start-up.	Unit will stop operating.	Manual reset via user interface.

To solve the error code

INFORMATION

It is recommended to perform the checks in the listed order.

1 Check if the power supply is compliant with the regulations. See "4.1 Electrical circuit" [▶ 299].

Possible cause:
- Faulty or disturbance of the power supply (power supply MUST be within range of nominal operating voltage ±4%),
- Power drop,
- Short circuit.

2 Check if the refrigerant circuit is clogged. See "4.2 Refrigerant circuit" [▶ 306].

Possible cause: Clogged refrigerant circuit.

3 Perform a check of the inverter PCB A6P. See "3.8 Inverter PCB" [▸ 225].

Possible cause: Faulty inverter PCB A6P.

4 Perform a check of the compressor M2C. See "3.2 Compressor" [▸ 182].

Possible cause: Faulty compressor M2C or miswiring of the compressor power supply cable.

> **INFORMATION**
> If all procedures listed above have been performed and the problem is still present, contact the helpdesk.

2.3.86 L9-13-14-15 – Inverter PCB A3P output phase abnormality

Main error code	Sub error code	Unit
L9	13	Main
	14	Sub 1
	15	Sub 2

> **INFORMATION**
> Main, Sub 1 and Sub 2 indications are relevant in multiple outdoor unit configurations. Main outdoor unit is the unit to which F1-F2 IN transmission line is connected. Main, Sub 1 and Sub 2 outdoor units can be identified by field setting 1-00.

Trigger	Effect	Reset
When inverter PCB A3P detects phase loss to compressor on U, V, W.	Unit will stop operating.	Manual reset via user interface.

To solve the error code

> **INFORMATION**
> It is recommended to perform the checks in the listed order.

1 Check if the power supply is compliant with the regulations. See "4.1 Electrical circuit" [▸ 299].

Possible cause:
- Faulty or disturbance of the power supply (power supply MUST be within range of nominal operating voltage ±4%),
- Power drop,
- Short circuit.

2 Perform a check of the inverter PCB A3P. See "3.8 Inverter PCB" [▸ 225].

Possible cause: Faulty inverter PCB A3P.

3 Perform a check of the compressor M1C. See "3.2 Compressor" [▸ 182].

Possible cause: Faulty compressor M1C or miswiring of the compressor power supply cable.

INFORMATION

If all procedures listed above have been performed and the problem is still present, contact the helpdesk.

2.3.87 L9-16-17-18 – Inverter PCB A6P output phase abnormality

Main error code	Sub error code	Unit
L9	16	Main
	17	Sub 1
	18	Sub 2

INFORMATION

Main, Sub 1 and Sub 2 indications are relevant in multiple outdoor unit configurations. Main outdoor unit is the unit to which F1-F2 IN transmission line is connected. Main, Sub 1 and Sub 2 outdoor units can be identified by field setting 1-00.

Trigger	Effect	Reset
When inverter PCB A6P detects phase loss to compressor on U, V, W.	Unit will stop operating.	Manual reset via user interface.

To solve the error code

INFORMATION

It is recommended to perform the checks in the listed order.

1. Check if the power supply is compliant with the regulations. See "4.1 Electrical circuit" [▸ 299].

   Possible cause:
   - Faulty or disturbance of the power supply (power supply MUST be within range of nominal operating voltage ±4%),
   - Power drop,
   - Short circuit.

2. Perform a check of the inverter PCB A6P. See "3.8 Inverter PCB" [▸ 225].

   Possible cause: Faulty inverter PCB A6P.

3. Perform a check of the compressor M2C. See "3.2 Compressor" [▸ 182].

   Possible cause: Faulty compressor M2C or miswiring of the compressor power supply cable.

INFORMATION

If all procedures listed above have been performed and the problem is still present, contact the helpdesk.

2.3.88 LC-01 – Transmission abnormality

Trigger	Effect	Reset
No transmission between PCB boards.	Unit will stop operating.	Automatic reset.

To solve the error code

> **INFORMATION**
> It is recommended to perform the checks in the listed order.

1. Perform a check of the main PCB. See "3.9 Main PCB" [▸ 243].

   Possible cause: Faulty main PCB or wrong capacity setting.

2. Perform a check of the noise filter PCB. See "3.10 Noise filter PCB" [▸ 252].

   Possible cause: Faulty noise filter PCB.

3. Perform a check of the inverter PCB. See "3.8 Inverter PCB" [▸ 225].

   Possible cause: Faulty inverter PCB.

4. Perform a check of the fan inverter PCB. See "3.6 Fan inverter PCB" [▸ 210].

   Possible cause: Faulty fan inverter PCB.

5. Check that the bridge connector X4A of the fan inverter PCB is correctly connected. See "3.6 Fan inverter PCB" [▸ 210].

   Possible cause: Open jumper X4A on fan inverter PCB.

6. Check the wiring between the PCB's. See "6.2 Wiring diagram" [▸ 325].

   Possible cause: Faulty wiring between PCB's.

7. Check if the correct spare part is installed for all PCB's. See checking procedures of the specific PCB's.

   Possible cause: Wrong spare part PCB installed.

> **INFORMATION**
> If all procedures listed above have been performed and the problem is still present, contact the helpdesk.

2.3.89 LC-14-15-16 – Transmission abnormality main PCB/inverter PCB A3P

Main error code	Sub error code	Unit
LC	14	Main
	15	Sub 1
	16	Sub 2

> **INFORMATION**
> Main, Sub 1 and Sub 2 indications are relevant in multiple outdoor unit configurations. Main outdoor unit is the unit to which F1-F2 IN transmission line is connected. Main, Sub 1 and Sub 2 outdoor units can be identified by field setting 1-00.

Trigger	Effect	Reset
No transmission between main PCB and inverter PCB A3P.	Unit will stop operating.	Automatic reset.

To solve the error code

INFORMATION

It is recommended to perform the checks in the listed order.

1. Perform a check of the main PCB. See "3.9 Main PCB" [▸ 243].

   Possible cause: Faulty main PCB or wrong capacity setting.

2. Perform a check of the noise filter PCB A2P. See "3.10 Noise filter PCB" [▸ 252].

   Possible cause: Faulty noise filter PCB A2P.

3. Perform a check of the inverter PCB A3P. See "3.8 Inverter PCB" [▸ 225].

   Possible cause: Faulty inverter PCB A3P.

4. Check the wiring between the PCB's. See "6.2 Wiring diagram" [▸ 325].

   Possible cause: Faulty wiring between PCB's.

5. Check if the correct spare part is installed for all PCB's. See checking procedures of the specific PCB's.

   Possible cause: Wrong spare part PCB installed.

INFORMATION

If all procedures listed above have been performed and the problem is still present, contact the helpdesk.

2.3.90 LC-19-20-21 – Transmission abnormality main PCB/fan inverter PCB A4P

Main error code	Sub error code	Unit
LC	19	Main
	20	Sub 1
	21	Sub 2

INFORMATION

Main, Sub 1 and Sub 2 indications are relevant in multiple outdoor unit configurations. Main outdoor unit is the unit to which F1-F2 IN transmission line is connected. Main, Sub 1 and Sub 2 outdoor units can be identified by field setting 1-00.

Trigger	Effect	Reset
No transmission between main PCB and fan inverter PCB A4P.	Unit will stop operating.	Automatic reset.

To solve the error code

INFORMATION

It is recommended to perform the checks in the listed order.

1. Perform a check of the main PCB. See "3.9 Main PCB" [▸ 243].

   Possible cause: Faulty main PCB or wrong capacity setting.

2 Perform a check of the noise filter PCB A2P. See "3.10 Noise filter PCB" [▶ 252].

Possible cause: Faulty noise filter PCB A2P.

3 Perform a check of the inverter PCB A3P. See "3.8 Inverter PCB" [▶ 225].

Possible cause: Faulty inverter PCB A3P.

4 Perform a check of the fan inverter PCB A4P. See "3.6 Fan inverter PCB" [▶ 210].

Possible cause: Faulty fan inverter PCB A4P.

5 Check that the bridge connector X4A of the fan inverter PCB is correctly connected. See "3.6 Fan inverter PCB" [▶ 210].

Possible cause: Open jumper X4A on fan inverter PCB.

6 Check the wiring between the PCB's. See "6.2 Wiring diagram" [▶ 325].

Possible cause: Faulty wiring between PCB's.

7 Check if the correct spare part is installed for all PCB's. See checking procedures of the specific PCB's.

Possible cause: Wrong spare part PCB installed.

> **INFORMATION**
> If all procedures listed above have been performed and the problem is still present, contact the helpdesk.

2.3.91 LC-24-25-26 – Transmission abnormality main PCB/fan inverter PCB A7P

Main error code	Sub error code	Unit
LC	24	Main
	25	Sub 1
	26	Sub 2

> **INFORMATION**
> Main, Sub 1 and Sub 2 indications are relevant in multiple outdoor unit configurations. Main outdoor unit is the unit to which F1-F2 IN transmission line is connected. Main, Sub 1 and Sub 2 outdoor units can be identified by field setting 1-00.

Trigger	Effect	Reset
No transmission between main PCB and fan inverter PCB A7P.	Unit will stop operating.	Automatic reset.

To solve the error code

> **INFORMATION**
> It is recommended to perform the checks in the listed order.

1 Perform a check of the main PCB. See "3.9 Main PCB" [▶ 243].

Possible cause: Faulty main PCB or wrong capacity setting.

2 Perform a check of the noise filter PCB A2P. See "3.10 Noise filter PCB" [▶ 252].

Possible cause: Faulty noise filter PCB A2P.

3 Perform a check of the inverter PCB A3P. See "3.8 Inverter PCB" [▶ 225].

Possible cause: Faulty inverter PCB A3P.

4 Perform a check of the noise filter PCB A5P. See "3.10 Noise filter PCB" [▶ 252].

Possible cause: Faulty noise filter PCB A5P.

5 Perform a check of the inverter PCB A6P. See "3.8 Inverter PCB" [▶ 225].

Possible cause: Faulty inverter PCB A6P.

6 Perform a check of the fan inverter PCB A7P. See "3.6 Fan inverter PCB" [▶ 210].

Possible cause: Faulty fan inverter PCB A7P.

7 Check that the bridge connector X4A of the fan inverter PCB is correctly connected. See "3.6 Fan inverter PCB" [▶ 210].

Possible cause: Open jumper X4A on fan inverter PCB.

8 Check the wiring between the PCB's. See "6.2 Wiring diagram" [▶ 325].

Possible cause: Faulty wiring between PCB's.

9 Check if the correct spare part is installed for all PCB's. See checking procedures of the specific PCB's.

Possible cause: Wrong spare part PCB installed.

INFORMATION

If all procedures listed above have been performed and the problem is still present, contact the helpdesk.

2.3.92 LC-30-31-32 – Transmission abnormality main PCB/inverter PCB A6P

Main error code	Sub error code	Unit
LC	30	Main
	31	Sub 1
	32	Sub 2

INFORMATION

Main, Sub 1 and Sub 2 indications are relevant in multiple outdoor unit configurations. Main outdoor unit is the unit to which F1-F2 IN transmission line is connected. Main, Sub 1 and Sub 2 outdoor units can be identified by field setting 1-00.

Trigger	Effect	Reset
No transmission between main PCB and inverter PCB A6P .	Unit will stop operating.	Automatic reset.

To solve the error code

> **INFORMATION**
> It is recommended to perform the checks in the listed order.

1. Perform a check of the main PCB. See "3.9 Main PCB" [▸ 243].

   Possible cause: Faulty main PCB or wrong capacity setting.

2. Perform a check of the noise filter PCB A2P. See "3.10 Noise filter PCB" [▸ 252].

   Possible cause: Faulty noise filter PCB A2P.

3. Perform a check of the inverter PCB A3P. See "3.8 Inverter PCB" [▸ 225].

   Possible cause: Faulty inverter PCB A3P.

4. Perform a check of the noise filter PCB A5P. See "3.10 Noise filter PCB" [▸ 252].

   Possible cause: Faulty noise filter PCB A5P.

5. Perform a check of the inverter PCB A6P. See "3.8 Inverter PCB" [▸ 225].

   Possible cause: Faulty inverter PCB A6P.

6. Check the wiring between the PCB's. See "6.2 Wiring diagram" [▸ 325].

   Possible cause: Faulty wiring between PCB's.

7. Check if the correct spare part is installed for all PCB's. See checking procedures of the specific PCB's.

   Possible cause: Wrong spare part PCB installed.

> **INFORMATION**
> If all procedures listed above have been performed and the problem is still present, contact the helpdesk.

2.3.93 P1-01-02-03 – Open phase or unbalanced power supply detection by inverter PCB A3P

Main error code	Sub error code	Unit
P1	01	Main
	02	Sub 1
	03	Sub 2

> **INFORMATION**
> Main, Sub 1 and Sub 2 indications are relevant in multiple outdoor unit configurations. Main outdoor unit is the unit to which F1-F2 IN transmission line is connected. Main, Sub 1 and Sub 2 outdoor units can be identified by field setting 1-00.

Trigger	Effect	Reset
Inverter PCB A3P detects power unbalance >4%.	Unit will stop operating.	Manual reset via user interface.
		Automatic reset.

To solve the error code

INFORMATION

It is recommended to perform the checks in the listed order.

1 Check if the power supply is compliant with the regulations. See "4.1 Electrical circuit" [▸ 299].

Possible cause:
- Faulty or disturbance of the power supply (power supply MUST be within range of nominal operating voltage ±4%),
- Power drop,
- Short circuit.

2 Perform a check of the inverter PCB A3P. See "3.8 Inverter PCB" [▸ 225].

Possible cause: Faulty inverter PCB A3P.

INFORMATION

If all procedures listed above have been performed and the problem is still present, contact the helpdesk.

2.3.94 P1-07-08-09 – Open phase or unbalanced power supply detection by inverter PCB A6P

Main error code	Sub error code	Unit
P1	07	Main
	08	Sub 1
	09	Sub 2

INFORMATION

Main, Sub 1 and Sub 2 indications are relevant in multiple outdoor unit configurations. Main outdoor unit is the unit to which F1-F2 IN transmission line is connected. Main, Sub 1 and Sub 2 outdoor units can be identified by field setting 1-00.

Trigger	Effect	Reset
Inverter PCB A6P detects power unbalance >4%.	Unit will stop operating.	Manual reset via user interface.
		Automatic reset.

To solve the error code

INFORMATION

It is recommended to perform the checks in the listed order.

1 Check if the power supply is compliant with the regulations. See "4.1 Electrical circuit" [▸ 299].

Possible cause:
- Faulty or disturbance of the power supply (power supply MUST be within range of nominal operating voltage ±4%),
- Power drop,
- Short circuit.

2 Perform a check of the inverter PCB A6P. See "3.8 Inverter PCB" [▸ 225].

Possible cause: Faulty inverter PCB A6P.

> **INFORMATION**
> If all procedures listed above have been performed and the problem is still present, contact the helpdesk.

2.3.95 P2-00 – Refrigerant auto-charge interrupted

Trigger	Effect	Reset
Auto-charge function is terminated before finished.	Auto-charge operation will terminate.	Push BS3 (return) button once.

To solve the error code

> **INFORMATION**
> It is recommended to perform the checks in the listed order.

1 Check for objects near the indoor unit that may block the airflow. See "4.3 External factors" [▸ 316].

Possible cause: Airflow of the indoor unit is blocked.

2 Clean the air filters of the indoor unit(s). See service manual of the respective indoor unit(s).

Possible cause: Faulty or clogged air filter.

3 Adjust external static pressure setting for ducted type indoor units, if necessary.

4 Restart refrigerant auto-charge function. See installer reference guide for more information.

> **INFORMATION**
> If all procedures listed above have been performed and the problem is still present, contact the helpdesk.

2.3.96 P4-01-04-05 – Fin thermistor abnormality on inverter PCB A3P

Main error code	Sub error code	Unit
P4	01	Main
	04	Sub 1
	05	Sub 2

> **INFORMATION**
> Main, Sub 1 and Sub 2 indications are relevant in multiple outdoor unit configurations. Main outdoor unit is the unit to which F1-F2 IN transmission line is connected. Main, Sub 1 and Sub 2 outdoor units can be identified by field setting 1-00.

Trigger	Effect	Reset
Inverter PCB A3P detects open or short circuit or out of range on fin thermistor.	Unit will stop operating.	Manual reset via user interface.
		Automatic reset when fin temperature is within range.

To solve the error code

INFORMATION

It is recommended to perform the checks in the listed order.

1 Perform a check of the fin thermistor of the PCB. See "3.17 Thermistors" [▸ 292].

Possible cause: Faulty fin thermistor of the PCB.

1 Check the required space around the outdoor unit heat exchanger. See "4.3 External factors" [▸ 316].

Possible cause: Insufficient air flow or air by-pass due to required space specifications not met.

2 Perform a check of the liquid cooling expansion valve. See "3.5 Expansion valve" [▸ 201].

Possible cause: Faulty liquid cooling expansion valve.

3 Perform a check of the inverter PCB A3P. See "3.8 Inverter PCB" [▸ 225].

Possible cause: Faulty inverter PCB A3P.

INFORMATION

If all procedures listed above have been performed and the problem is still present, contact the helpdesk.

2.3.97 P4-02-15-17 – Fin thermistor abnormality on fan inverter PCB A4P

Main error code	Sub error code	Unit
P4	02	Main
	15	Sub 1
	17	Sub 2

INFORMATION

Main, Sub 1 and Sub 2 indications are relevant in multiple outdoor unit configurations. Main outdoor unit is the unit to which F1-F2 IN transmission line is connected. Main, Sub 1 and Sub 2 outdoor units can be identified by field setting 1-00.

Trigger	Effect	Reset
Fan inverter PCB A4P detects open or short circuit or out of range on fin thermistor.	Unit will stop operating.	Manual reset via user interface.
		Automatic reset when fin temperature is within range.

To solve the error code

INFORMATION

It is recommended to perform the checks in the listed order.

1 Perform a check of the fin thermistor of the PCB. See "3.17 Thermistors" [▶ 292].

Possible cause: Faulty fin thermistor of the PCB.

1 Check the required space around the outdoor unit heat exchanger. See "4.3 External factors" [▶ 316].

Possible cause: Insufficient air flow or air by-pass due to required space specifications not met.

2 Perform a check of the liquid cooling expansion valve. See "3.5 Expansion valve" [▶ 201].

Possible cause: Faulty liquid cooling expansion valve.

3 Perform a check of the fan inverter PCB A4P. See "3.6 Fan inverter PCB" [▶ 210].

Possible cause: Faulty fan inverter PCB A4P.

INFORMATION

If all procedures listed above have been performed and the problem is still present, contact the helpdesk.

2.3.98 P4-03-16-18 – Fin thermistor abnormality on fan inverter PCB A7P

Main error code	Sub error code	Unit
P4	03	Main
	16	Sub 1
	18	Sub 2

INFORMATION

Main, Sub 1 and Sub 2 indications are relevant in multiple outdoor unit configurations. Main outdoor unit is the unit to which F1-F2 IN transmission line is connected. Main, Sub 1 and Sub 2 outdoor units can be identified by field setting 1-00.

Trigger	Effect	Reset
Fan inverter PCB A7P detects open or short circuit or out of range on fin thermistor.	Unit will stop operating.	Manual reset via user interface.
		Automatic reset when fin temperature is within range.

To solve the error code

INFORMATION

It is recommended to perform the checks in the listed order.

1 Perform a check of the fin thermistor of the PCB. See "3.17 Thermistors" [▸ 292].

Possible cause: Faulty fin thermistor of the PCB.

1 Check the required space around the outdoor unit heat exchanger. See "4.3 External factors" [▸ 316].

Possible cause: Insufficient air flow or air by-pass due to required space specifications not met.

2 Perform a check of the liquid cooling expansion valve. See "3.5 Expansion valve" [▸ 201].

Possible cause: Faulty liquid cooling expansion valve.

3 Perform a check of the fan inverter PCB A7P. See "3.6 Fan inverter PCB" [▸ 210].

Possible cause: Faulty fan inverter PCB A7P.

INFORMATION

If all procedures listed above have been performed and the problem is still present, contact the helpdesk.

2.3.99 P4-06-07-08 – Fin thermistor abnormality on inverter PCB A6P

Main error code	Sub error code	Unit
P4	06	Main
	07	Sub 1
	08	Sub 2

INFORMATION

Main, Sub 1 and Sub 2 indications are relevant in multiple outdoor unit configurations. Main outdoor unit is the unit to which F1-F2 IN transmission line is connected. Main, Sub 1 and Sub 2 outdoor units can be identified by field setting 1-00.

Trigger	Effect	Reset
Inverter PCB A6P detects open or short circuit or out of range on fin thermistor.	Unit will stop operating.	Manual reset via user interface.
		Automatic reset when fin temperature is within range.

To solve the error code

> **INFORMATION**
> It is recommended to perform the checks in the listed order.

1 Perform a check of the fin thermistor of the PCB. See "3.17 Thermistors" [▸ 292].

Possible cause: Faulty fin thermistor of the PCB.

1 Check the required space around the outdoor unit heat exchanger. See "4.3 External factors" [▸ 316].

Possible cause: Insufficient air flow or air by-pass due to required space specifications not met.

2 Perform a check of the liquid cooling expansion valve. See "3.5 Expansion valve" [▸ 201].

Possible cause: Faulty liquid cooling expansion valve.

3 Perform a check of the inverter PCB A6P. See "3.8 Inverter PCB" [▸ 225].

Possible cause: Faulty inverter PCB A6P.

> **INFORMATION**
> If all procedures listed above have been performed and the problem is still present, contact the helpdesk.

2.3.100 P8-00 – Freeze-up during refrigerant auto-charge

Trigger	Effect	Reset
Very low temperatures detected on indoor unit coil during refrigerant auto-charge.	Auto-charge operation will terminate.	Push BS3 (return) button once.

To solve the error code

> **INFORMATION**
> It is recommended to perform the checks in the listed order.

1 Check for objects near the indoor unit that may block the airflow. See "4.3 External factors" [▸ 316].

Possible cause: Airflow of the indoor unit is blocked.

2 Clean the air filters of the indoor unit(s). See service manual of the respective indoor unit(s).

Possible cause: Faulty or clogged air filter.

3 Adjust external static pressure setting for ducted type indoor units, if necessary.

4 Restart refrigerant auto-charge function. See installer reference guide for more information.

> **INFORMATION**
> If all procedures listed above have been performed and the problem is still present, contact the helpdesk.

2.3.101 P9-00 – Refrigerant auto-charge finished normally

Trigger	Effect	Reset
This is not an error. It indicates that refrigerant auto-charge function ended normally and user may proceed with test run.	-	Push BS1 (mode) button once.

To solve the error code

1 Proceed with test run.

> **INFORMATION**
> If all procedures listed above have been performed and the problem is still present, contact the helpdesk.

2.3.102 PA-00 – No refrigerant in refrigerant cylinder during auto-charge

Trigger	Effect	Reset
-	-	-

To solve the error code

> **INFORMATION**
> It is recommended to perform the checks in the listed order.

1 Connect a new refrigerant cylinder to continue refrigerant auto-charge. See installer reference guide for more information.

> **INFORMATION**
> If all procedures listed above have been performed and the problem is still present, contact the helpdesk.

2.3.103 PE-00 – Refrigerant auto-charge in last stage

Trigger	Effect	Reset
This is not an error. It indicates that refrigerant auto-charge function proceeded to final stage.	-	-

To solve the error code

1 Continue refrigerant charging.

INFORMATION

If all procedures listed above have been performed and the problem is still present, contact the helpdesk.

2.3.104 PF-00 – Long test run failed

Trigger	Effect	Reset
Long test run failed (2-88=0) while additional charge input (2-14=0).	Unit will stop test run.	Push BS1 (mode) button once.

To solve the error code

INFORMATION

It is recommended to perform the checks in the listed order.

1. Change field setting 2–14. See "6.9 Field settings" [▸ 380].

   Possible cause: No input at field setting 2–14 (2–14 = 0) when field setting 2–88 = 0.

2. Set field setting 2–88 to 1, see "6.9 Field settings" [▸ 380]. Press the set button BS2 more than 5 seconds to start the short test run.

INFORMATION

Leak check function will NOT be available if short test run is conducted while commissioning.

INFORMATION

If all procedures listed above have been performed and the problem is still present, contact the helpdesk.

2.3.105 PJ-04-05-06 – Capacity setting mismatch for inverter PCB A3P

Main error code	Sub error code	Unit
PJ	04	Main
	05	Sub 1
	06	Sub 2

INFORMATION

Main, Sub 1 and Sub 2 indications are relevant in multiple outdoor unit configurations. Main outdoor unit is the unit to which F1-F2 IN transmission line is connected. Main, Sub 1 and Sub 2 outdoor units can be identified by field setting 1-00.

Trigger	Effect	Reset
Main PCB detects other type PCB than set in EEPROM or wrong dip switch setting on spare part main PCB.	Unit will stop operating.	Manual reset via user interface.
		Power reset at outdoor unit.

To solve the error code

INFORMATION

It is recommended to perform the checks in the listed order.

1 Check if the correct spare part is installed for the main PCB. See "3.9 Main PCB" [▶ 243]. Check dip switch setting for spare part main PCB.

Possible cause: Incorrect spare part main PCB or incorrect dip switch setting.

2 Perform a check of the main PCB. See "3.9 Main PCB" [▶ 243].

Possible cause: Faulty main PCB.

3 Perform a check of the inverter PCB A3P. See "3.8 Inverter PCB" [▶ 225].

Possible cause: Faulty inverter PCB A3P.

INFORMATION

If all procedures listed above have been performed and the problem is still present, contact the helpdesk.

2.3.106 PJ-09-15-16 – Capacity setting mismatch for fan inverter PCB A4P

Main error code	Sub error code	Unit
PJ	09	Main
	15	Sub 1
	16	Sub 2

INFORMATION

Main, Sub 1 and Sub 2 indications are relevant in multiple outdoor unit configurations. Main outdoor unit is the unit to which F1-F2 IN transmission line is connected. Main, Sub 1 and Sub 2 outdoor units can be identified by field setting 1-00.

Trigger	Effect	Reset
Main PCB detects other type PCB than set in EEPROM or wrong dip switch setting on spare part main PCB.	Unit will stop operating.	Manual reset via user interface.
		Power reset at outdoor unit.

To solve the error code

INFORMATION

It is recommended to perform the checks in the listed order.

1 Check if the correct spare part is installed for the main PCB. See "3.9 Main PCB" [▶ 243]. Check dip switch setting for spare part main PCB.

Possible cause: Incorrect spare part main PCB or incorrect dip switch setting.

2 Perform a check of the main PCB. See "3.9 Main PCB" [▶ 243].

Possible cause: Faulty main PCB.

3 Perform a check of the fan inverter PCB A4P. See "3.6 Fan inverter PCB" [▶ 210].

Possible cause: Faulty fan inverter PCB A4P.

> **INFORMATION**
> If all procedures listed above have been performed and the problem is still present, contact the helpdesk.

2.3.107 PJ-10-17-18 – Capacity setting mismatch for fan inverter PCB A7P

Main error code	Sub error code	Unit
PJ	10	Main
	17	Sub 1
	18	Sub 2

> **INFORMATION**
> Main, Sub 1 and Sub 2 indications are relevant in multiple outdoor unit configurations. Main outdoor unit is the unit to which F1-F2 IN transmission line is connected. Main, Sub 1 and Sub 2 outdoor units can be identified by field setting 1-00.

Trigger	Effect	Reset
Main PCB detects other type PCB than set in EEPROM or wrong dip switch setting on spare part main PCB.	Unit will stop operating.	Manual reset via user interface.
		Power reset at outdoor unit.

To solve the error code

> **INFORMATION**
> It is recommended to perform the checks in the listed order.

1 Check if the correct spare part is installed for the main PCB. See "3.9 Main PCB" [▶ 243]. Check dip switch setting for spare part main PCB.

Possible cause: Incorrect spare part main PCB or incorrect dip switch setting.

2 Perform a check of the main PCB. See "3.9 Main PCB" [▶ 243].

Possible cause: Faulty main PCB.

3 Perform a check of the fan inverter PCB A7P. See "3.6 Fan inverter PCB" [▶ 210].

Possible cause: Faulty fan inverter PCB A7P.

> **INFORMATION**
> If all procedures listed above have been performed and the problem is still present, contact the helpdesk.

2.3.108 PJ-12-13-14 – Capacity setting mismatch for inverter PCB A6P

Main error code	Sub error code	Unit
PJ	12	Main
	13	Sub 1
	14	Sub 2

INFORMATION

Main, Sub 1 and Sub 2 indications are relevant in multiple outdoor unit configurations. Main outdoor unit is the unit to which F1-F2 IN transmission line is connected. Main, Sub 1 and Sub 2 outdoor units can be identified by field setting 1-00.

Trigger	Effect	Reset
Main PCB detects other type PCB than set in EEPROM or wrong dip switch setting on spare part main PCB.	Unit will stop operating.	Manual reset via user interface.
		Power reset at outdoor unit.

To solve the error code

INFORMATION

It is recommended to perform the checks in the listed order.

1. Check if the correct spare part is installed for the main PCB. See "3.9 Main PCB" [▸ 243]. Check dip switch setting for spare part main PCB.

   Possible cause: Incorrect spare part main PCB or incorrect dip switch setting.

2. Perform a check of the main PCB. See "3.9 Main PCB" [▸ 243].

   Possible cause: Faulty main PCB.

3. Perform a check of the inverter PCB A6P. See "3.8 Inverter PCB" [▸ 225].

   Possible cause: Faulty inverter PCB A6P.

INFORMATION

If all procedures listed above have been performed and the problem is still present, contact the helpdesk.

2.3.109 U0-05 – Refrigerant shortage detection

Trigger	Effect	Reset
Refrigerant shortage detection during cooling.	Unit keeps running.	Auto reset.

To solve the error code

INFORMATION

It is recommended to perform the checks in the listed order.

1. Check that all stop valves of the refrigerant circuit are open. See "4.2 Refrigerant circuit" [▸ 306].

Possible cause: Closed stop valve in the refrigerant circuit.

2 Perform a check of all expansion valves. See "3.5 Expansion valve" [▶ 201].

Possible cause: Faulty expansion valve.

3 Perform a check of the refrigerant low pressure sensor. See "3.16 Refrigerant low pressure sensor" [▶ 288]

Possible cause: Faulty refrigerant low pressure sensor.

4 Perform a check of the suction pipe thermistor. See "3.17 Thermistors" [▶ 292].

Possible cause: Faulty suction pipe thermistor or connector fault.

5 Perform a check of the discharge pipe thermistor. See "3.17 Thermistors" [▶ 292].

Possible cause: Faulty discharge pipe thermistor or connector fault.

6 Check for the presence of non-condensables and/or humidity in the refrigerant circuit. See "4.2 Refrigerant circuit" [▶ 306].

Possible cause: Non-condensables and/or humidity in the refrigerant circuit.

7 Check if the refrigerant circuit is correctly charged. See "4.2 Refrigerant circuit" [▶ 306].

Possible cause: Refrigerant shortage.

8 Perform a check of the refrigerant high pressure sensor. See "3.15 Refrigerant high pressure sensor" [▶ 284].

Possible cause: Faulty refrigerant high pressure sensor.

9 Perform a check of the compressor. See "3.2 Compressor" [▶ 182].

Possible cause: Faulty compressor or miswiring of the compressor power supply cable.

> **INFORMATION**
> If all procedures listed above have been performed and the problem is still present, contact the helpdesk.

2.3.110 U0-06 – Refrigerant shortage detection

Trigger	Effect	Reset
Refrigerant shortage detection during heating.	Unit keeps running.	Auto reset.

To solve the error code

> **INFORMATION**
> It is recommended to perform the checks in the listed order.

1 Check that all stop valves of the refrigerant circuit are open. See "4.2 Refrigerant circuit" [▶ 306].

Possible cause: Closed stop valve in the refrigerant circuit.

2 Perform a check of all expansion valves. See "3.5 Expansion valve" [▶ 201].

Possible cause: Faulty expansion valve.

3 Perform a check of the refrigerant low pressure sensor. See "3.16 Refrigerant low pressure sensor" [▶ 288]

Possible cause: Faulty refrigerant low pressure sensor.

4 Perform a check of the suction pipe thermistor. See "3.17 Thermistors" [▶ 292].

Possible cause: Faulty suction pipe thermistor or connector fault.

5 Perform a check of the discharge pipe thermistor. See "3.17 Thermistors" [▶ 292].

Possible cause: Faulty discharge pipe thermistor or connector fault.

6 Check for the presence of non-condensables and/or humidity in the refrigerant circuit. See "4.2 Refrigerant circuit" [▶ 306].

Possible cause: Non-condensables and/or humidity in the refrigerant circuit.

7 Check if the refrigerant circuit is correctly charged. See "4.2 Refrigerant circuit" [▶ 306].

Possible cause: Refrigerant shortage.

8 Perform a check of the refrigerant high pressure sensor. See "3.15 Refrigerant high pressure sensor" [▶ 284].

Possible cause: Faulty refrigerant high pressure sensor.

9 Perform a check of the compressor. See "3.2 Compressor" [▶ 182].

Possible cause: Faulty compressor or miswiring of the compressor power supply cable.

> **INFORMATION**
> If all procedures listed above have been performed and the problem is still present, contact the helpdesk.

2.3.111 U0-08-09-10 – Refrigerant shortage detection by high pressure sensor

Main error code	Sub error code	Unit
U0	08	Main
	09	Sub 1
	10	Sub 2

> **INFORMATION**
> Main, Sub 1 and Sub 2 indications are relevant in multiple outdoor unit configurations. Main outdoor unit is the unit to which F1-F2 IN transmission line is connected. Main, Sub 1 and Sub 2 outdoor units can be identified by field setting 1-00.

Trigger	Effect	Reset
Refrigerant shortage detection.	Unit keeps running.	Auto reset.

To solve the error code

> **INFORMATION**
> It is recommended to perform the checks in the listed order.

1 Check that all stop valves of the refrigerant circuit are open. See "4.2 Refrigerant circuit" [▶ 306].

Possible cause: Closed stop valve in the refrigerant circuit.

2 Perform a check of all expansion valves. See "3.5 Expansion valve" [▶ 201].

Possible cause: Faulty expansion valve.

3 Perform a check of the refrigerant low pressure sensor. See "3.16 Refrigerant low pressure sensor" [▶ 288]

Possible cause: Faulty refrigerant low pressure sensor.

4 Perform a check of the suction pipe thermistor. See "3.17 Thermistors" [▶ 292].

Possible cause: Faulty suction pipe thermistor or connector fault.

5 Perform a check of the discharge pipe thermistor. See "3.17 Thermistors" [▶ 292].

Possible cause: Faulty discharge pipe thermistor or connector fault.

6 Check for the presence of non-condensables and/or humidity in the refrigerant circuit. See "4.2 Refrigerant circuit" [▶ 306].

Possible cause: Non-condensables and/or humidity in the refrigerant circuit.

7 Check if the refrigerant circuit is correctly charged. See "4.2 Refrigerant circuit" [▶ 306].

Possible cause: Refrigerant shortage.

8 Perform a check of the refrigerant high pressure sensor. See "3.15 Refrigerant high pressure sensor" [▶ 284].

Possible cause: Faulty refrigerant high pressure sensor.

9 Perform a check of the compressor. See "3.2 Compressor" [▶ 182].

Possible cause: Faulty compressor or miswiring of the compressor power supply cable.

INFORMATION

If all procedures listed above have been performed and the problem is still present, contact the helpdesk.

2.3.112 U1-01-05-07 – Reverse phase detection

Main error code	Sub error code	Unit
U1	01	Main
	05	Sub 1
	07	Sub 2

INFORMATION

Main, Sub 1 and Sub 2 indications are relevant in multiple outdoor unit configurations. Main outdoor unit is the unit to which F1-F2 IN transmission line is connected. Main, Sub 1 and Sub 2 outdoor units can be identified by field setting 1-00.

Trigger	Effect	Reset
Main PCB detects reverse phase between L1 - L3 phases.	Forced stop.	Power reset at outdoor unit.

To solve the error code

INFORMATION

It is recommended to perform the checks in the listed order.

1. Check the phase sequence on the mains power supply terminal, see "To check the power supply of the unit" in "4.1 Electrical circuit" [▸ 299]. Correct if needed.

   Possible cause: Incorrect phase sequence on mains power supply terminal.

2. Check if any of the phases is missing on the mains power supply terminal, see "To check the power supply of the unit" in "4.1 Electrical circuit" [▸ 299]. Correct if needed.

   Possible cause: Missing phase(s) on mains power supply terminal.

3. Check if the phase L3 is present on the power supply connector X1A on the main PCB, see "To perform a power check" in "3.9 Main PCB" [▸ 243]. Correct if needed.

   Possible cause: Missing phase L3 on main PCB power supply connector.

4. Perform a check of the fuses of the main PCB, see "3.9 Main PCB" [▸ 243].

   Possible cause: Blown fuse(s) on main PCB.

INFORMATION

If all procedures listed above have been performed and the problem is still present, contact the helpdesk.

2.3.113 U1-04-06-08 – Reverse phase detection

Main error code	Sub error code	Unit
U1	04	Main
	06	Sub 1
	08	Sub 2

INFORMATION

Main, Sub 1 and Sub 2 indications are relevant in multiple outdoor unit configurations. Main outdoor unit is the unit to which F1-F2 IN transmission line is connected. Main, Sub 1 and Sub 2 outdoor units can be identified by field setting 1-00.

Trigger	Effect	Reset
Main PCB detects reverse phase between L1 - L3 phases.	Forced stop.	Power reset at outdoor unit.

To solve the error code

> **INFORMATION**
> It is recommended to perform the checks in the listed order.

1. Check the phase sequence on the mains power supply terminal, see "To check the power supply of the unit" in "4.1 Electrical circuit" [▸ 299]. Correct if needed.

   Possible cause: Incorrect phase sequence on mains power supply terminal.

2. Check if any of the phases is missing on the mains power supply terminal, see "To check the power supply of the unit" in "4.1 Electrical circuit" [▸ 299]. Correct if needed.

   Possible cause: Missing phase(s) on mains power supply terminal.

3. Check if the phase L3 is present on the power supply connector X1A on the main PCB, see "To perform a power check" in "3.9 Main PCB" [▸ 243]. Correct if needed.

   Possible cause: Missing phase L3 on main PCB power supply connector.

4. Perform a check of the fuses of the main PCB, see "3.9 Main PCB" [▸ 243].

   Possible cause: Blown fuse(s) on main PCB.

> **INFORMATION**
> If all procedures listed above have been performed and the problem is still present, contact the helpdesk.

2.3.114 U2-01-08-11 – Inverter circuit power supply abnormality - inverter PCB A3P abnormal voltage

Main error code	Sub error code	Unit
U2	01	Main
	08	Sub 1
	11	Sub 2

> **INFORMATION**
> Main, Sub 1 and Sub 2 indications are relevant in multiple outdoor unit configurations. Main outdoor unit is the unit to which F1-F2 IN transmission line is connected. Main, Sub 1 and Sub 2 outdoor units can be identified by field setting 1-00.

Trigger	Effect	Reset
Inverter PCB A3P detects DC voltage cannot reach or maintain minimum 500 V DC.	Unit will stop operating.	Power reset at outdoor unit.
No zero cross is detected by main PCB through at least 10 seconds.		
Abnormal voltage drop is detected by DC voltage detection circuit.		
Abnormal voltage rise is detected by over voltage detection circuit.		

To solve the error code

INFORMATION

It is recommended to perform the checks in the listed order.

1. Check if the power supply wiring is correct. See "4.1 Electrical circuit" [▶ 299].

   Possible cause: Incorrect power supply wiring.

2. Perform a check of the noise filter PCB A2P. See "3.10 Noise filter PCB" [▶ 252].

   Possible cause: Faulty noise filter PCB A2P.

3. Perform a check of the inverter PCB A3P. See "3.8 Inverter PCB" [▶ 225].

   Possible cause: Faulty inverter PCB A3P.

4. Check the wiring between the PCB's. See "6.2 Wiring diagram" [▶ 325].

   Possible cause: Faulty wiring between PCB's.

5. Perform a check of the reactor. See "3.14 Reactor" [▶ 281].

   Possible cause: Faulty reactor.

INFORMATION

If all procedures listed above have been performed and the problem is still present, contact the helpdesk.

2.3.115 U2-02-09-12 – Inverter circuit power supply abnormality - inverter PCB A3P phase loss

Main error code	Sub error code	Unit
U2	02	Main
	09	Sub 1
	12	Sub 2

INFORMATION

Main, Sub 1 and Sub 2 indications are relevant in multiple outdoor unit configurations. Main outdoor unit is the unit to which F1-F2 IN transmission line is connected. Main, Sub 1 and Sub 2 outdoor units can be identified by field setting 1-00.

Trigger	Effect	Reset
Inverter PCB A3P detects DC voltage cannot reach or maintain minimum 500 V DC.	Unit will stop operating.	Power reset at outdoor unit.
No zero cross is detected by main PCB through at least 10 seconds.		
Abnormal voltage drop is detected by DC voltage detection circuit.		
Abnormal voltage rise is detected by over voltage detection circuit.		

To solve the error code

INFORMATION

It is recommended to perform the checks in the listed order.

1. Check if the power supply wiring is correct. See "4.1 Electrical circuit" [▶ 299].

   Possible cause: Incorrect power supply wiring.

2. Perform a check of the noise filter PCB A2P. See "3.10 Noise filter PCB" [▶ 252].

   Possible cause: Faulty noise filter PCB A2P.

3. Perform a check of the inverter PCB A3P. See "3.8 Inverter PCB" [▶ 225].

   Possible cause: Faulty inverter PCB A3P.

4. Check the wiring between the PCB's. See "6.2 Wiring diagram" [▶ 325].

   Possible cause: Faulty wiring between PCB's.

5. Perform a check of the reactor. See "3.14 Reactor" [▶ 281].

   Possible cause: Faulty reactor.

INFORMATION

If all procedures listed above have been performed and the problem is still present, contact the helpdesk.

2.3.116 U2-03-10-13 – Inverter circuit power supply abnormality - inverter PCB A3P DC circuit not charging

Main error code	Sub error code	Unit
U2	03	Main
	10	Sub 1
	13	Sub 2

INFORMATION

Main, Sub 1 and Sub 2 indications are relevant in multiple outdoor unit configurations. Main outdoor unit is the unit to which F1-F2 IN transmission line is connected. Main, Sub 1 and Sub 2 outdoor units can be identified by field setting 1-00.

Trigger	Effect	Reset
Inverter PCB A3P detects DC voltage cannot reach or maintain minimum 500 V DC.	Unit will stop operating.	Power reset at outdoor unit.
No zero cross is detected by main PCB through at least 10 seconds.		
Abnormal voltage drop is detected by DC voltage detection circuit.		
Abnormal voltage rise is detected by over voltage detection circuit.		

To solve the error code

INFORMATION

It is recommended to perform the checks in the listed order.

1. Check if the power supply wiring is correct. See "4.1 Electrical circuit" [▶ 299].

   Possible cause: Incorrect power supply wiring.

2. Perform a check of the noise filter PCB A2P. See "3.10 Noise filter PCB" [▶ 252].

   Possible cause: Faulty noise filter PCB A2P.

3. Perform a check of the inverter PCB A3P. See "3.8 Inverter PCB" [▶ 225].

   Possible cause: Faulty inverter PCB A3P.

4. Check the wiring between the PCB's. See "6.2 Wiring diagram" [▶ 325].

   Possible cause: Faulty wiring between PCB's.

5. Perform a check of the reactor. See "3.14 Reactor" [▶ 281].

   Possible cause: Faulty reactor.

INFORMATION

If all procedures listed above have been performed and the problem is still present, contact the helpdesk.

2.3.117 U2-22-25-28 – Inverter circuit power supply abnormality - inverter PCB A6P abnormal voltage

Main error code	Sub error code	Unit
U2	22	Main
	25	Sub 1
	28	Sub 2

INFORMATION

Main, Sub 1 and Sub 2 indications are relevant in multiple outdoor unit configurations. Main outdoor unit is the unit to which F1-F2 IN transmission line is connected. Main, Sub 1 and Sub 2 outdoor units can be identified by field setting 1-00.

Trigger	Effect	Reset
Inverter PCB A6P detects DC voltage cannot reach or maintain minimum 500 V DC.	Unit will stop operating.	Power reset at outdoor unit.
No zero cross is detected by main PCB through at least 10 seconds.		
Abnormal voltage drop is detected by DC voltage detection circuit.		
Abnormal voltage rise is detected by over voltage detection circuit.		

To solve the error code

INFORMATION

It is recommended to perform the checks in the listed order.

1. Check if the power supply wiring is correct. See "4.1 Electrical circuit" [▶ 299].

   Possible cause: Incorrect power supply wiring.

2. Perform a check of the noise filter PCB A5P. See "3.10 Noise filter PCB" [▶ 252].

   Possible cause: Faulty noise filter PCB A5P.

3. Perform a check of the inverter PCB A6P. See "3.8 Inverter PCB" [▶ 225].

   Possible cause: Faulty inverter PCB A6P.

4. Check the wiring between the PCB's. See "6.2 Wiring diagram" [▶ 325].

   Possible cause: Faulty wiring between PCB's.

5 Perform a check of the reactor. See "3.14 Reactor" [▶ 281].

Possible cause: Faulty reactor.

> **INFORMATION**
> If all procedures listed above have been performed and the problem is still present, contact the helpdesk.

2.3.118 U2-23-26-29 – Inverter circuit power supply abnormality - inverter PCB A6P phase loss

Main error code	Sub error code	Unit
U2	23	Main
	26	Sub 1
	29	Sub 2

> **INFORMATION**
> Main, Sub 1 and Sub 2 indications are relevant in multiple outdoor unit configurations. Main outdoor unit is the unit to which F1-F2 IN transmission line is connected. Main, Sub 1 and Sub 2 outdoor units can be identified by field setting 1-00.

Trigger	Effect	Reset
Inverter PCB A6P detects DC voltage cannot reach or maintain minimum 500 V DC.	Unit will stop operating.	Power reset at outdoor unit.
No zero cross is detected by main PCB through at least 10 seconds.		
Abnormal voltage drop is detected by DC voltage detection circuit.		
Abnormal voltage rise is detected by over voltage detection circuit.		

To solve the error code

> **INFORMATION**
> It is recommended to perform the checks in the listed order.

1 Check if the power supply wiring is correct. See "4.1 Electrical circuit" [▶ 299].

Possible cause: Incorrect power supply wiring.

2 Perform a check of the noise filter PCB A5P. See "3.10 Noise filter PCB" [▶ 252].

Possible cause: Faulty noise filter PCB A5P.

3 Perform a check of the inverter PCB A6P. See "3.8 Inverter PCB" [▶ 225].

Possible cause: Faulty inverter PCB A6P.

4 Check the wiring between the PCB's. See "6.2 Wiring diagram" [▶ 325].

Possible cause: Faulty wiring between PCB's.

5 Perform a check of the reactor. See "3.14 Reactor" [▶ 281].

Possible cause: Faulty reactor.

> **INFORMATION**
> If all procedures listed above have been performed and the problem is still present, contact the helpdesk.

2.3.119 U2-24-27-30 – Inverter circuit power supply abnormality - inverter PCB A6P DC circuit not charging

Main error code	Sub error code	Unit
U2	24	Main
	27	Sub 1
	30	Sub 2

> **INFORMATION**
> Main, Sub 1 and Sub 2 indications are relevant in multiple outdoor unit configurations. Main outdoor unit is the unit to which F1-F2 IN transmission line is connected. Main, Sub 1 and Sub 2 outdoor units can be identified by field setting 1-00.

Trigger	Effect	Reset
Inverter PCB A6P detects DC voltage cannot reach or maintain minimum 500 V DC.	Unit will stop operating.	Power reset at outdoor unit.
No zero cross is detected by main PCB through at least 10 seconds.		
Abnormal voltage drop is detected by DC voltage detection circuit.		
Abnormal voltage rise is detected by over voltage detection circuit.		

To solve the error code

> **INFORMATION**
> It is recommended to perform the checks in the listed order.

1 Check if the power supply wiring is correct. See "4.1 Electrical circuit" [▶ 299].

Possible cause: Incorrect power supply wiring.

2 Perform a check of the noise filter PCB A5P. See "3.10 Noise filter PCB" [▶ 252].

Possible cause: Faulty noise filter PCB A5P.

3 Perform a check of the inverter PCB A6P. See "3.8 Inverter PCB" [▶ 225].

Possible cause: Faulty inverter PCB A6P.

4 Check the wiring between the PCB's. See "6.2 Wiring diagram" [▸ 325].

Possible cause: Faulty wiring between PCB's.

5 Perform a check of the reactor. See "3.14 Reactor" [▸ 281].

Possible cause: Faulty reactor.

> **INFORMATION**
> If all procedures listed above have been performed and the problem is still present, contact the helpdesk.

2.3.120 U3-02 – Test run interrupted manually

Trigger	Effect	Reset
Test run interrupted manually by user on main PCB.	Warning.	Perform test run.
Leak detection or refrigerant amount check has NOT been performed.		

To solve the error code

> **INFORMATION**
> It is recommended to perform the checks in the listed order.

1 Check if communication between outdoor unit and indoor units is initialised. Check field setting 1-10 for count of indoor units, see "6.9 Field settings" [▸ 380]. If less indoor units shown than expected, communication between 1 or more indoor unit(s) and outdoor unit is NOT correct. Check the F1-F2 transmission line between the indoor unit and outdoor unit, see "4.1 Electrical circuit" [▸ 299].

Possible cause: Faulty or interruption in transmission line between indoor units and outdoor unit.

2 Perform a test run from the outdoor unit. See installer reference guide for more information.

3 Check the error history, see "2 Troubleshooting" [▸ 12]. Solve the error code(s) using the error based troubleshooting, see "2.3 Error based troubleshooting" [▸ 20].

4 System operation is possible but leak detection function will NEVER run.

> **INFORMATION**
> If all procedures listed above have been performed and the problem is still present, contact the helpdesk.

2.3.121 U3-03 – Test run not performed yet

Trigger	Effect	Reset
Test run NOT performed.	Unit will NOT operate.	Perform test run.

To solve the error code

> **INFORMATION**
> It is recommended to perform the checks in the listed order.

1. Check if communication between outdoor unit and indoor units is initialised. Check field setting 1-10 for count of indoor units, see "6.9 Field settings" [▸ 380]. If less indoor units shown than expected, communication between 1 or more indoor unit(s) and outdoor unit is NOT correct. Check the F1-F2 transmission line between the indoor unit and outdoor unit, see "4.1 Electrical circuit" [▸ 299].

   Possible cause: Faulty or interruption in transmission line between indoor units and outdoor unit.

2. Perform a test run from the outdoor unit. See installer reference guide for more information.
3. Check the error history, see "2 Troubleshooting" [▸ 12]. Solve the error code(s) using the error based troubleshooting, see "2.3 Error based troubleshooting" [▸ 20].

> **INFORMATION**
> If all procedures listed above have been performed and the problem is still present, contact the helpdesk.

2.3.122 U3-04 – Test run ended abnormally

Trigger	Effect	Reset
Test run ended abnormally.	Unit will NOT operate.	Restart test run.

To solve the error code

> **INFORMATION**
> It is recommended to perform the checks in the listed order.

1. Check for an indoor unit related error code. See "2.3.163 Indoor unit related error codes" [▸ 153] for an overview of the indoor unit related error codes. To solve the error, see the service manual of the respective indoor unit(s) for more information.
2. Check the error history, see "2 Troubleshooting" [▸ 12]. Solve the error code(s) using the error based troubleshooting, see "2.3 Error based troubleshooting" [▸ 20].
3. Check if communication between outdoor unit and indoor units is initialised. Check field setting 1-10 for count of indoor units, see "6.9 Field settings" [▸ 380]. If less indoor units shown than expected, communication between 1 or more indoor unit(s) and outdoor unit is NOT correct. Check the F1-F2 transmission line between the indoor unit and outdoor unit, see "4.1 Electrical circuit" [▸ 299].

   Possible cause: Faulty or interruption in transmission line between indoor units and outdoor unit.

4. Perform a test run from the outdoor unit. See installer reference guide for more information.

INFORMATION

If all procedures listed above have been performed and the problem is still present, contact the helpdesk.

2.3.123 U3-05 – Test run aborted on initial transmission

Trigger	Effect	Reset
Test run could NOT start or abort due to transmission issues.	Unit will NOT operate.	Restart test run.

To solve the error code

INFORMATION

It is recommended to perform the checks in the listed order.

1. Check if communication between outdoor unit and indoor units is initialised. Check field setting 1-10 for count of indoor units, see "6.9 Field settings" [▸ 380]. If less indoor units shown than expected, communication between 1 or more indoor unit(s) and outdoor unit is NOT correct. Check the F1-F2 transmission line between the indoor unit and outdoor unit, see "4.1 Electrical circuit" [▸ 299].

   Possible cause: Faulty or interruption in transmission line between indoor units and outdoor unit.

2. Check the F1-F2 transmission line between the indoor units and outdoor unit. See "4.1 Electrical circuit" [▸ 299].

   Possible cause: Faulty or interruption in transmission line between indoor units and outdoor unit.

3. Perform a test run from the outdoor unit. See installer reference guide for more information.

INFORMATION

If all procedures listed above have been performed and the problem is still present, contact the helpdesk.

2.3.124 U3-06 – Test run aborted on normal transmission

Trigger	Effect	Reset
Test run could NOT start or abort due to transmission issues.	Unit will NOT operate.	Restart test run.

To solve the error code

INFORMATION

It is recommended to perform the checks in the listed order.

1. Check if communication between outdoor unit and indoor units is initialised. Check field setting 1-10 for count of indoor units, see "6.9 Field settings" [▸ 380]. If less indoor units shown than expected, communication

between 1 or more indoor unit(s) and outdoor unit is NOT correct. Check the F1-F2 transmission line between the indoor unit and outdoor unit, see "4.1 Electrical circuit" [▸ 299].

Possible cause: Faulty or interruption in transmission line between indoor units and outdoor unit.

2 Check the F1-F2 transmission line between the indoor units and outdoor unit. See "4.1 Electrical circuit" [▸ 299].

Possible cause: Faulty or interruption in transmission line between indoor units and outdoor unit.

3 Perform a test run from the outdoor unit. See installer reference guide for more information.

> **INFORMATION**
> If all procedures listed above have been performed and the problem is still present, contact the helpdesk.

2.3.125 U3-07 – Transmission abnormality on test run

Trigger	Effect	Reset
Test run could NOT start or abort due to transmission issues.	Unit will NOT operate.	Restart test run.

To solve the error code

> **INFORMATION**
> It is recommended to perform the checks in the listed order.

1 Check if communication between outdoor unit and indoor units is initialised. Check field setting 1-10 for count of indoor units, see "6.9 Field settings" [▸ 380]. If less indoor units shown than expected, communication between 1 or more indoor unit(s) and outdoor unit is NOT correct. Check the F1-F2 transmission line between the indoor unit and outdoor unit, see "4.1 Electrical circuit" [▸ 299].

Possible cause: Faulty or interruption in transmission line between indoor units and outdoor unit.

2 Check the F1-F2 transmission line between the indoor units and outdoor unit. See "4.1 Electrical circuit" [▸ 299].

Possible cause: Faulty or interruption in transmission line between indoor units and outdoor unit.

3 Perform a test run from the outdoor unit. See installer reference guide for more information.

> **INFORMATION**
> If all procedures listed above have been performed and the problem is still present, contact the helpdesk.

2.3.126 U3-08 – Transmission abnormality on test run

Trigger	Effect	Reset
Test run could NOT start or abort due to transmission issues.	Unit will NOT operate.	Restart test run.

To solve the error code

INFORMATION

It is recommended to perform the checks in the listed order.

1. Check if communication between outdoor unit and indoor units is initialised. Check field setting 1-10 for count of indoor units, see "6.9 Field settings" [▸ 380]. If less indoor units shown than expected, communication between 1 or more indoor unit(s) and outdoor unit is NOT correct. Check the F1-F2 transmission line between the indoor unit and outdoor unit, see "4.1 Electrical circuit" [▸ 299].

   Possible cause: Faulty or interruption in transmission line between indoor units and outdoor unit.

2. Check the F1-F2 transmission line between the indoor units and outdoor unit. See "4.1 Electrical circuit" [▸ 299].

   Possible cause: Faulty or interruption in transmission line between indoor units and outdoor unit.

3. Perform a test run from the outdoor unit. See installer reference guide for more information.

INFORMATION

If all procedures listed above have been performed and the problem is still present, contact the helpdesk.

2.3.127 U4-01 – Transmission error between indoor units and outdoor unit

Trigger	Effect	Reset
Main PCB detects abnormal transmission on F1-F2 transmission line to indoor units.	Unit will stop operating.	Auto reset.
Transmission between indoor units and outdoor unit is interrupted while in initialization.		

To solve the error code

INFORMATION

It is recommended to perform the checks in the listed order.

1. Check if the power supply is compliant with the regulations. See "4.1 Electrical circuit" [▸ 299].

Possible cause:
- Faulty or disturbance of the power supply (power supply MUST be within range of nominal operating voltage ±4%),
- Power drop,
- Short circuit.

2 Check the F1-F2 transmission line between the indoor units and outdoor unit. See "4.1 Electrical circuit" [▸ 299].

Possible cause: Faulty or interruption in transmission line between indoor units and outdoor unit.

3 Check field setting 1-10 to count the indoor units, see "6.9 Field settings" [▸ 380]. If less indoor units detected than it should be, check the indoor unit(s) that have power black-out or malfunctioning PCB. See service manual of the respective indoor unit for more information.

Possible cause: Power black-out or malfunctioning PCB on indoor unit(s).

4 Perform a check of the main PCB. See "3.9 Main PCB" [▸ 243].

Possible cause: Faulty main PCB.

5 Perform a power reset. If the error disappears and is raised again after a while, check for the presence of an external source causing electrical noise. See "4.3 External factors" [▸ 316].

Possible cause: External source may cause interference.

6 Set field setting 2-5 of the outdoor unit to 1 to start the indoor units connected to that outdoor unit on forced fan operation, see "6.9 Field settings" [▸ 380]. If any of these indoor units is NOT operating, check the indoor unit(s) that have power black-out or malfunctioning PCB. See service manual of the respective indoor unit for more information.

Possible cause: Power black-out or malfunctioning PCB on indoor unit(s).

> **INFORMATION**
> If all procedures listed above have been performed and the problem is still present, contact the helpdesk.

2.3.128 U4-03 – Transmission error between indoor units and system

Trigger	Effect	Reset
Main PCB detects abnormal transmission on F1-F2 transmission line to indoor units.	Unit will stop operating.	Auto reset.
Transmission between indoor units and outdoor unit is interrupted while in initialization.		

To solve the error code

> **INFORMATION**
> It is recommended to perform the checks in the listed order.

1 Check if the power supply is compliant with the regulations. See "4.1 Electrical circuit" [▸ 299].

Possible cause:
- Faulty or disturbance of the power supply (power supply MUST be within range of nominal operating voltage ±4%),
- Power drop,
- Short circuit.

2 Check the F1-F2 transmission line between the indoor units and outdoor unit. See "4.1 Electrical circuit" [▸ 299].

Possible cause: Faulty or interruption in transmission line between indoor units and outdoor unit.

3 Check field setting 1-10 to count the indoor units, see "6.9 Field settings" [▸ 380]. If less indoor units detected than it should be, check the indoor unit(s) that have power black-out or malfunctioning PCB. See service manual of the respective indoor unit for more information.

Possible cause: Power black-out or malfunctioning PCB on indoor unit(s).

4 Perform a check of the main PCB. See "3.9 Main PCB" [▸ 243].

Possible cause: Faulty main PCB.

5 Perform a power reset. If the error disappears and is raised again after a while, check for the presence of an external source causing electrical noise. See "4.3 External factors" [▸ 316].

Possible cause: External source may cause interference.

6 Set field setting 2-5 of the outdoor unit to 1 to start the indoor units connected to that outdoor unit on forced fan operation, see "6.9 Field settings" [▸ 380]. If any of these indoor units is NOT operating, check the indoor unit(s) that have power black-out or malfunctioning PCB. See service manual of the respective indoor unit for more information.

Possible cause: Power black-out or malfunctioning PCB on indoor unit(s).

7 Check indoor units for error.

8 Refer to indoor unit error codes and indoor unit manuals to troubleshoot.

Possible cause: Indoor unit on error.

> **INFORMATION**
> If all procedures listed above have been performed and the problem is still present, contact the helpdesk.

2.3.129 U4-15 – Unable to start test run

Trigger	Effect	Reset
Main PCB detects malfunction on indoor unit(s).	Test run will NOT start.	Perform test run.

To solve the error code

> **INFORMATION**
> It is recommended to perform the checks in the listed order.

1 Set field setting 2-5 of the outdoor unit to 1 to start the indoor units connected to that outdoor unit on forced fan operation, see "6.9 Field settings" [▶ 380]. If any of these indoor units is NOT operating, check the indoor unit(s) that have power black-out or malfunctioning PCB. See service manual of the respective indoor unit for more information.

Possible cause: Power black-out or malfunctioning PCB on indoor unit(s).

2 Check field setting 1-10 to count the indoor units, see "6.9 Field settings" [▶ 380]. If less indoor units detected than it should be, check the indoor unit(s) that have power black-out or malfunctioning PCB. See service manual of the respective indoor unit for more information.

Possible cause: Power black-out or malfunctioning PCB on indoor unit(s).

3 Perform a check of the main PCB. See "3.9 Main PCB" [▶ 243].

Possible cause: Faulty main PCB.

INFORMATION

If all procedures listed above have been performed and the problem is still present, contact the helpdesk.

2.3.130 U7-01 – Transmission abnormality between systems - DTA104A61,62 error

Trigger	Effect	Reset
Communication problem between systems.	Unit will stop operating.	Auto reset when communication is normal.
Conflict in settings and configuration for DTA104A61,62.	Unit keeps running.	Auto reset when correct settings apply on DTA104A61,62.

To solve the error code

INFORMATION

It is recommended to perform the checks in the listed order.

1 Check the Q1-Q2 communication between the outdoor units. See "4.1 Electrical circuit" [▶ 299].

Possible cause: Faulty or interruption in communication between outdoor units.

2 Perform a check of the main PCB. See "3.9 Main PCB" [▶ 243].

Possible cause: Faulty main PCB.

3 Check wiring and configuration of option DTA104A61, 62. See option handbook on Business Portal for more information.

4 Check the F1-F2 OUT transmission line between the outdoor unit main PCB and option PCB DTA104A61, 62. See "4.1 Electrical circuit" [▶ 299].

Possible cause: Faulty or interruption in transmission line between outdoor unit and option DTA104A61, 62.

5 Check that ONLY the master outdoor unit has F1-F2 IN connection. If another outdoor unit has F1-F2 IN connection, correct the installation.

6 Check if low noise operation or demand control is active without an optional DTA104A61,62 PCB. Field setting 2-12 CANNOT be set to 1 if DTA104A61,62 is not present, see "6.9 Field settings" [▸ 380].

> **INFORMATION**
> If all procedures listed above have been performed and the problem is still present, contact the helpdesk.

2.3.131 U7-02 – Transmission abnormality between systems - DTA104A61,62 error

Trigger	Effect	Reset
Transmission error on DTA104A61,62 initialization.	Forced stop.	Auto reset.

To solve the error code

> **INFORMATION**
> It is recommended to perform the checks in the listed order.

1 Check if multiple units are wired to the same cool/heat zone without cool/heat master set. One main PCB needs to be set cool/heat master (field setting 2-0 = 1) while all other units need to be set sub (field setting 2-0 = 2). See "6.9 Field settings" [▸ 380].

Possible cause: No cool/heat master set when multiple units are wired to the same cool/heat zone.

2 If unified cool/heat selection is NOT present, set the DTA104A61,62 cool/heat setting to IND.

3 Check wiring and configuration of option DTA104A61, 62. See option handbook on Business Portal for more information.

4 Check if low noise operation or demand control is active without an optional DTA104A61,62 PCB. Field setting 2-12 CANNOT be set to 1 if DTA104A61,62 is not present, see "6.9 Field settings" [▸ 380].

> **INFORMATION**
> If all procedures listed above have been performed and the problem is still present, contact the helpdesk.

2.3.132 U7-03 – Transmission abnormality between main outdoor unit and sub 1 outdoor unit

Trigger	Effect	Reset
Main PCB on main outdoor unit detects transmission abnormality on a multi installation.	Forced stop.	Auto reset.

To solve the error code

> **INFORMATION**
> It is recommended to perform the checks in the listed order.

1 Check the Q1-Q2 communication between the outdoor units. See "4.1 Electrical circuit" [▶ 299].

Possible cause: Faulty or interruption in communication between outdoor units.

2 Perform a check of the main PCB of the main outdoor unit. See "3.9 Main PCB" [▶ 243].

Possible cause: Faulty main PCB of the main outdoor unit.

3 Perform a check of the main PCB of the sub 1 outdoor unit. See "3.9 Main PCB" [▶ 243].

Possible cause: Faulty main PCB of the sub 1 outdoor unit.

4 Check that ONLY the master outdoor unit has F1-F2 IN connection. If another outdoor unit has F1-F2 IN connection, correct the installation.

> **INFORMATION**
> If all procedures listed above have been performed and the problem is still present, contact the helpdesk.

2.3.133 U7-04 – Transmission abnormality between main outdoor unit and sub 2 outdoor unit

Trigger	Effect	Reset
Main PCB on main outdoor unit detects transmission abnormality on a multi installation.	Forced stop.	Auto reset.

To solve the error code

> **INFORMATION**
> It is recommended to perform the checks in the listed order.

1 Check the Q1-Q2 communication between the outdoor units. See "4.1 Electrical circuit" [▶ 299].

Possible cause: Faulty or interruption in communication between outdoor units.

2 Perform a check of the main PCB of the main outdoor unit. See "3.9 Main PCB" [▶ 243].

Possible cause: Faulty main PCB of the main outdoor unit.

3 Perform a check of the main PCB of the sub 2 outdoor unit. See "3.9 Main PCB" [▶ 243].

Possible cause: Faulty main PCB of the sub 2 outdoor unit.

4 Check that ONLY the master outdoor unit has F1-F2 IN connection. If another outdoor unit has F1-F2 IN connection, correct the installation.

> **INFORMATION**
> If all procedures listed above have been performed and the problem is still present, contact the helpdesk.

2.3.134 U7-05 – Multi system abnormality

Trigger	Effect	Reset
Main PCB on main outdoor unit detects transmission abnormality on a multi installation.	Forced stop.	Auto reset.

To solve the error code

INFORMATION

It is recommended to perform the checks in the listed order.

1. Check the Q1-Q2 communication between the outdoor units. See "4.1 Electrical circuit" [▸ 299].

   Possible cause: Faulty or interruption in communication between outdoor units.

2. Perform a check of the main PCB of the main outdoor unit. See "3.9 Main PCB" [▸ 243].

   Possible cause: Faulty main PCB of the main outdoor unit.

3. Perform a check of the main PCB of the sub 1 outdoor unit. See "3.9 Main PCB" [▸ 243].

   Possible cause: Faulty main PCB of the sub 1 outdoor unit.

4. Perform a check of the main PCB of the sub 2 outdoor unit. See "3.9 Main PCB" [▸ 243].

   Possible cause: Faulty main PCB of the sub 2 outdoor unit.

5. Check that ONLY the master outdoor unit has F1-F2 IN connection. If another outdoor unit has F1-F2 IN connection, correct the installation.

INFORMATION

If all procedures listed above have been performed and the problem is still present, contact the helpdesk.

2.3.135 U7-06 – Multi system address abnormality

Trigger	Effect	Reset
Main PCB on main outdoor unit detects transmission abnormality on a multi installation.	Forced stop.	Auto reset.

To solve the error code

INFORMATION

It is recommended to perform the checks in the listed order.

1. Check the Q1-Q2 communication between the outdoor units. See "4.1 Electrical circuit" [▸ 299].

   Possible cause: Faulty or interruption in communication between outdoor units.

2 Perform a check of the main PCB. See "3.9 Main PCB" [▸ 243].

Possible cause: Faulty main PCB.

3 Check that ONLY the master outdoor unit has F1-F2 IN connection. If another outdoor unit has F1-F2 IN connection, correct the installation.

> **INFORMATION**
> If all procedures listed above have been performed and the problem is still present, contact the helpdesk.

2.3.136 U7-07 – More than 3 outdoor units on Q1-Q2 transmission

Trigger	Effect	Reset
More than 3 outdoor units are detected on Q1-Q2 transmission line.	Forced stop.	Power reset at outdoor unit.

To solve the error code

> **INFORMATION**
> It is recommended to perform the checks in the listed order.

1 Maximum 3 outdoor units are allowed in the installation. Change the installation if needed.

2 Check the Q1-Q2 communication between the outdoor units. See "4.1 Electrical circuit" [▸ 299].

Possible cause: Faulty or interruption in communication between outdoor units.

3 Perform a check of the main PCB. See "3.9 Main PCB" [▸ 243].

Possible cause: Faulty main PCB.

> **INFORMATION**
> If all procedures listed above have been performed and the problem is still present, contact the helpdesk.

2.3.137 U7-11 – Excess indoor units detected on test run

Trigger	Effect	Reset
Test run detects more than allowed amount of indoor units or indoor unit total index.	Forced stop.	Auto reset.

To solve the error code

> **INFORMATION**
> It is recommended to perform the checks in the listed order.

1 Check total index and total count for indoor units. See Data book on Business Portal for more information.

Possible cause: Indoor Unit capacity connected is too high.

2 Perform a check of the main PCB. See "3.9 Main PCB" [▸ 243].

Possible cause: Faulty main PCB.

3 Check the F1-F2 transmission line between the indoor units and outdoor unit. See "4.1 Electrical circuit" [▸ 299].

Possible cause: Faulty or interruption in transmission line between indoor units and outdoor unit.

> **INFORMATION**
> If all procedures listed above have been performed and the problem is still present, contact the helpdesk.

2.3.138 U7-24 – Duplication of address setting on multiple DTA104A61,62 installation

Trigger	Effect	Reset
Bad configuration of option DTA104A61,62 PCB.	Forced stop.	DTA104A61,62 power reset.

To solve the error code

> **INFORMATION**
> It is recommended to perform the checks in the listed order.

1 Check wiring and configuration of option DTA104A61, 62. See option handbook on Business Portal for more information.

2 Perform a check of the main PCB. See "3.9 Main PCB" [▸ 243].

Possible cause: Faulty main PCB.

> **INFORMATION**
> If all procedures listed above have been performed and the problem is still present, contact the helpdesk.

2.3.139 U9-01 – Other indoor unit has error

Trigger	Effect	Reset
System mismatch, non-compatible indoor units.	Forced stop.	Auto reset.
At least one other indoor unit on same F1-F2 wiring has an error.		

To solve the error code

> **INFORMATION**
> It is recommended to perform the checks in the listed order.

1 Check the indoor units for error codes other than U9-01. See troubleshooting in the service manual of the respective indoor unit(s) to solve the error code(s).

2 Check for improper combination of units. See the combination table in the Databook for more information. Change the installation with ONLY compatible type units.

3 Check field setting 1-10 to count the indoor units, see "6.9 Field settings" [▸ 380]. If less indoor units detected than it should be, check the indoor unit(s) that have power black-out or malfunctioning PCB. See service manual of the respective indoor unit for more information.

Possible cause: Power black-out or malfunctioning PCB on indoor unit(s).

4 Set field setting 2-5 of the outdoor unit to 1 to start the indoor units connected to that outdoor unit on forced fan operation, see "6.9 Field settings" [▸ 380]. If any of these indoor units is NOT operating, check the indoor unit(s) that have power black-out or malfunctioning PCB. See service manual of the respective indoor unit for more information.

Possible cause: Power black-out or malfunctioning PCB on indoor unit(s).

5 Perform a check of the main PCB. See "3.9 Main PCB" [▸ 243].

Possible cause: Faulty main PCB.

6 Check the F1-F2 transmission line between the indoor units and outdoor unit. See "4.1 Electrical circuit" [▸ 299].

Possible cause: Faulty or interruption in transmission line between indoor units and outdoor unit.

> **INFORMATION**
> If all procedures listed above have been performed and the problem is still present, contact the helpdesk.

2.3.140 UA-00 – Combination abnormality

Trigger	Effect	Reset
Combination abnormality.	Forced stop.	Power reset and only allowed combination.

To solve the error code

> **INFORMATION**
> It is recommended to perform the checks in the listed order.

1 Change the installation with ONLY R410A type indoor units.

> **INFORMATION**
> If all procedures listed above have been performed and the problem is still present, contact the helpdesk.

2.3.141 UA-03 – Combination abnormality - Mix of R22, R407C R410A and R32 type units detected

Trigger	Effect	Reset
Mix of R22, R407C, R410A, R32 type units detected.	Forced stop.	Power reset and only allowed combination.

To solve the error code

> **INFORMATION**
> It is recommended to perform the checks in the listed order.

1 Change the installation with ONLY R410A type indoor units.

> **INFORMATION**
> If all procedures listed above have been performed and the problem is still present, contact the helpdesk.

2.3.142 UA-16 – Combination abnormality - More than 64 indoor units detected on same system

Trigger	Effect	Reset
Main PCB on main outdoor unit detects more than 64 indoor units on same system.	Forced stop.	Automatic reset after re-initialization detects less than 64 compatible indoor units.

To solve the error code

> **INFORMATION**
> It is recommended to perform the checks in the listed order.

1 Change the installation to include a maximum of 64 indoor units.

> **INFORMATION**
> If all procedures listed above have been performed and the problem is still present, contact the helpdesk.

2.3.143 UA-17 – Combination abnormality - Local setting abnormality

Trigger	Effect	Reset
Main PCB on main outdoor unit detects compatibility issues.	Forced stop.	Automatic reset after re-initialization detects compatible units and normal field settings.
Main PCB detects field setting abnormality.		

To solve the error code

> **INFORMATION**
> It is recommended to perform the checks in the listed order.

1 Check for improper combination of units. See the combination table in the Databook for more information. Change the installation with ONLY compatible type units.

2 Check and verify the outdoor unit field settings with the default settings. See "6.9 Field settings" [▸ 380].

> **INFORMATION**
> If all procedures listed above have been performed and the problem is still present, contact the helpdesk.

2.3.144 UA-18 – Combination abnormality - Outdoor unit not compatible with indoor units (refrigerant type)

Trigger	Effect	Reset
Main PCB on main outdoor unit detects compatibility issues.	Forced stop.	Automatic reset after re-initialization detects compatible units.
Outdoor unit NOT compatible with indoor units (refrigerant type).		

To solve the error code

> **INFORMATION**
> It is recommended to perform the checks in the listed order.

1 Check for improper combination of units. See the combination table in the Databook for more information. Change the installation with ONLY compatible type units.

> **INFORMATION**
> If all procedures listed above have been performed and the problem is still present, contact the helpdesk.

2.3.145 UA-19 – Combination abnormality - Local set alarm

Trigger	Effect	Reset
Main PCB on main outdoor unit detects compatibility issues.	Forced stop.	Automatic reset after re-initialization detects compatible units and normal field settings.
Main PCB detects field setting abnormality, local set alarm.		

To solve the error code

> **INFORMATION**
> It is recommended to perform the checks in the listed order.

1 Check for improper combination of units. See the combination table in the Databook for more information. Change the installation with ONLY compatible type units.

2 Check and verify the outdoor unit field settings with the default settings. See "6.9 Field settings" [▸ 380].

> **INFORMATION**
> If all procedures listed above have been performed and the problem is still present, contact the helpdesk.

2.3.146 UA-20 – Combination abnormality - Non-compatible outdoor unit in multi-combination

Trigger	Effect	Reset
Main PCB on main outdoor unit detects compatibility issues.	Forced stop.	Automatic reset after re-initialization detects compatible units.
Outdoor unit NOT compatible with multi combination.		

To solve the error code

> **INFORMATION**
> It is recommended to perform the checks in the listed order.

1 Check for improper combination of units. See the combination table in the Databook for more information. Change the installation with ONLY compatible type units.

> **INFORMATION**
> If all procedures listed above have been performed and the problem is still present, contact the helpdesk.

2.3.147 UA-21 – Combination abnormality - BPMK units detected

Trigger	Effect	Reset
Main PCB detects BPMK unit(s) on F1/F2 wiring.	Forced stop.	Automatic reset after re-initialization detects compatible units.

To solve the error code

> **INFORMATION**
> It is recommended to perform the checks in the listed order.

1 Check for improper combination of units. See the combination table in the Databook for more information. Change the installation with ONLY compatible type units.

2 Change the installation without BPMK units.

2.3.148 UA-31 – Combination abnormality - Multi combination abnormality

Trigger	Effect	Reset
More than 3 outdoor units are detected on Q1-Q2 transmission line.	Forced stop.	Power reset at outdoor unit.

To solve the error code

INFORMATION

It is recommended to perform the checks in the listed order.

1. Maximum 3 outdoor units are allowed in the installation. Change the installation if needed.
2. Check the Q1-Q2 communication between the outdoor units. See "4.1 Electrical circuit" [▸ 299].

   Possible cause: Faulty or interruption in communication between outdoor units.
3. Perform a check of the main PCB. See "3.9 Main PCB" [▸ 243].

   Possible cause: Faulty main PCB.

INFORMATION

If all procedures listed above have been performed and the problem is still present, contact the helpdesk.

2.3.149 UA-38 – Combination abnormality - Altherma hydro unit detected

Trigger	Effect	Reset
Main PCB on main outdoor unit detects Altherma hydrobox on F1-F2 IN wiring.	Forced stop.	Automatic reset after re-initialization detects compatible units.

To solve the error code

INFORMATION

It is recommended to perform the checks in the listed order.

1. Only LT Hydrobox HXY-A unit is allowed in the installation. See the Databook for more information.

INFORMATION

If all procedures listed above have been performed and the problem is still present, contact the helpdesk.

2.3.150 UA-39 – Combination abnormality - Incorrect combination

Trigger	Effect	Reset
Main PCB on main outdoor unit detects compatibility issues.	Forced stop.	Automatic reset after re-initialization detects compatible units.

To solve the error code

> **INFORMATION**
> It is recommended to perform the checks in the listed order.

1. Check for improper combination of units. See the combination table in the Databook for more information. Change the installation with ONLY compatible type units.

> **INFORMATION**
> If all procedures listed above have been performed and the problem is still present, contact the helpdesk.

2.3.151 UA-49 – Combination abnormality - Wrong unit combination

Trigger	Effect	Reset
Main PCB on main outdoor unit detects compatibility issues.	Forced stop.	Automatic reset after re-initialization detects compatible units.

To solve the error code

> **INFORMATION**
> It is recommended to perform the checks in the listed order.

1. Check for improper combination of units. See the combination table in the Databook for more information. Change the installation with ONLY compatible type units.

> **INFORMATION**
> If all procedures listed above have been performed and the problem is still present, contact the helpdesk.

2.3.152 UF-01 – Wiring and piping mismatch - Auto address inconsistency on F1-F2 transmission

Trigger	Effect	Reset
Minimum 1 indoor unit fails to perform cross pipe check during test run.	Forced stop.	Perform test run.

To solve the error code

> **INFORMATION**
> It is recommended to perform the checks in the listed order.

1 Check that all stop valves of the refrigerant circuit are open. See "4.2 Refrigerant circuit" [▶ 306].

Possible cause: Closed stop valve in the refrigerant circuit.

2 Check that the refrigerant circuit piping and wiring connections of the system are correctly installed.

Possible cause: Refrigerant piping and/or wiring mismatch.

3 Set field setting 2-5 of the outdoor unit to 1 to start the indoor units connected to that outdoor unit on forced fan operation, see "6.9 Field settings" [▶ 380]. If any of these indoor units is NOT operating, check the indoor unit(s) that have power black-out or malfunctioning PCB. See service manual of the respective indoor unit for more information.

Possible cause: Power black-out or malfunctioning PCB on indoor unit(s).

4 Check field setting 1-10 to count the indoor units, see "6.9 Field settings" [▶ 380]. If less indoor units detected than it should be, check the indoor unit(s) that have power black-out or malfunctioning PCB. See service manual of the respective indoor unit for more information.

Possible cause: Power black-out or malfunctioning PCB on indoor unit(s).

5 Perform a check of the indoor unit pipe thermistors, see service manual of the respective indoor unit(s) for more information.

Possible cause: Faulty indoor unit pipe thermistor.

INFORMATION

If all procedures listed above have been performed and the problem is still present, contact the helpdesk.

2.3.153 UF-05 – Wiring and piping mismatch - Stop valves closed or incorrect

Trigger	Effect	Reset
Minimum 1 indoor unit fails to perform cross pipe check during test run.	Forced stop.	Perform test run.

To solve the error code

INFORMATION

It is recommended to perform the checks in the listed order.

1 Check that all stop valves of the refrigerant circuit are open. See "4.2 Refrigerant circuit" [▶ 306].

Possible cause: Closed stop valve in the refrigerant circuit.

2 Check that the refrigerant circuit piping and wiring connections of the system are correctly installed.

Possible cause: Refrigerant piping and/or wiring mismatch.

3 Set field setting 2-5 of the outdoor unit to 1 to start the indoor units connected to that outdoor unit on forced fan operation, see "6.9 Field settings" [▶ 380]. If any of these indoor units is NOT operating, check the indoor unit(s) that have power black-out or malfunctioning PCB. See service manual of the respective indoor unit for more information.

Possible cause: Power black-out or malfunctioning PCB on indoor unit(s).

4 Check field setting 1-10 to count the indoor units, see "6.9 Field settings" [▸ 380]. If less indoor units detected than it should be, check the indoor unit(s) that have power black-out or malfunctioning PCB. See service manual of the respective indoor unit for more information.

Possible cause: Power black-out or malfunctioning PCB on indoor unit(s).

5 Perform a check of the indoor unit pipe thermistors, see service manual of the respective indoor unit(s) for more information.

Possible cause: Faulty indoor unit pipe thermistor.

> **INFORMATION**
> If all procedures listed above have been performed and the problem is still present, contact the helpdesk.

2.3.154 UF-11 – Wiring and piping mismatch - Excess connection ratio

Trigger	Effect	Reset
Minimum 1 indoor unit fails to perform cross pipe check during test run.	Forced stop.	Perform test run.

To solve the error code

> **INFORMATION**
> It is recommended to perform the checks in the listed order.

1 Check that all stop valves of the refrigerant circuit are open. See "4.2 Refrigerant circuit" [▸ 306].

Possible cause: Closed stop valve in the refrigerant circuit.

2 Check that the refrigerant circuit piping and wiring connections of the system are correctly installed.

Possible cause: Refrigerant piping and/or wiring mismatch.

3 Set field setting 2-5 of the outdoor unit to 1 to start the indoor units connected to that outdoor unit on forced fan operation, see "6.9 Field settings" [▸ 380]. If any of these indoor units is NOT operating, check the indoor unit(s) that have power black-out or malfunctioning PCB. See service manual of the respective indoor unit for more information.

Possible cause: Power black-out or malfunctioning PCB on indoor unit(s).

4 Check field setting 1-10 to count the indoor units, see "6.9 Field settings" [▸ 380]. If less indoor units detected than it should be, check the indoor unit(s) that have power black-out or malfunctioning PCB. See service manual of the respective indoor unit for more information.

Possible cause: Power black-out or malfunctioning PCB on indoor unit(s).

5 Perform a check of the indoor unit pipe thermistors, see service manual of the respective indoor unit(s) for more information.

Possible cause: Faulty indoor unit pipe thermistor.

INFORMATION

If all procedures listed above have been performed and the problem is still present, contact the helpdesk.

2.3.155 UH-01 – Auto-address failure

Trigger	Effect	Reset
Main PCB detects improper combination at indoor unit side.	Forced stop.	Reset communication from main PCB.
Missing auto address of indoor unit(s) after initialization.		

To solve the error code

INFORMATION

It is recommended to perform the checks in the listed order.

1. Set field setting 2-5 of the outdoor unit to 1 to start the indoor units connected to that outdoor unit on forced fan operation, see "6.9 Field settings" [▸ 380]. If any of these indoor units is NOT operating, check the indoor unit(s) that have power black-out or malfunctioning PCB. See service manual of the respective indoor unit for more information.

   Possible cause: Power black-out or malfunctioning PCB on indoor unit(s).

2. Perform a communication reset of the F1-F2 transmission, see "4.1 Electrical circuit" [▸ 299].

3. Check field setting 1-10 to count the indoor units, see "6.9 Field settings" [▸ 380]. If less indoor units detected than it should be, check the indoor unit(s) that have power black-out or malfunctioning PCB. See service manual of the respective indoor unit for more information.

   Possible cause: Power black-out or malfunctioning PCB on indoor unit(s).

4. Check if the power supply is compliant with the regulations. See "4.1 Electrical circuit" [▸ 299].

   Possible cause:
   - Faulty or disturbance of the power supply (power supply MUST be within range of nominal operating voltage ±4%),
   - Power drop,
   - Short circuit.

5. Check the F1-F2 transmission line between the indoor units and outdoor unit. See "4.1 Electrical circuit" [▸ 299].

   Possible cause: Faulty or interruption in transmission line between indoor units and outdoor unit.

6. Check for improper combination of units. See the combination table in the Databook for more information. Change the installation with ONLY compatible type units.

INFORMATION

If all procedures listed above have been performed and the problem is still present, contact the helpdesk.

2.3.156 E-1 – Refrigerant leak check is not possible

Trigger	Effect	Reset
Total refrigerant judgement is unknown.	Unit will stop operating.	Manual reset via user interface.

To solve the error code

INFORMATION

It is recommended to perform the checks in the listed order.

1. Change field setting 2–14. See "6.9 Field settings" [▶ 380].

   Possible cause: No input at field setting 2–14 (2–14 = 0) when field setting 2–88 = 0.

2. Set field setting 2–88 to 0, see "6.9 Field settings" [▶ 380] to enable the outdoor unit to perform long test run to be able to judge refrigerant amount.
3. Check if test run was interrupted.
4. Check the error history, see "2 Troubleshooting" [▶ 12]. Solve the error code(s) using the error based troubleshooting, see "2.3 Error based troubleshooting" [▶ 20].

INFORMATION

If all procedures listed above have been performed and the problem is still present, contact the helpdesk.

2.3.157 E-2 – Refrigerant leak check cannot be performed - indoor air temperature is out of range

Trigger	Effect	Reset
Average indoor unit air temperature <15°C.	Unit will NOT start refrigerant leak check mode.	Perform refrigerant leak check when average indoor temperature >15°C.

To solve the error code

INFORMATION

It is recommended to perform the checks in the listed order.

1. Perform a check of the indoor unit air thermistors. See service manual of the respective indoor unit(s) for more information.

   Possible cause: Faulty indoor unit air thermistor(s).

2. Perform refrigerant leak check when the average indoor temperature is above 15°C.

INFORMATION

If all procedures listed above have been performed and the problem is still present, contact the helpdesk.

2.3.158 E-3 – Refrigerant leak check cannot be performed - outdoor air temperature is out of range

Trigger	Effect	Reset
Outdoor air temperature <20°C.	Unit will NOT start refrigerant leak check mode.	Perform refrigerant leak check when average outdoor temperature >20°C.

To solve the error code

INFORMATION

It is recommended to perform the checks in the listed order.

1. Perform a check of the outdoor air thermistor. See "3.17 Thermistors" [▸ 292].

   Possible cause: Faulty ambient air thermistor.

2. Perform refrigerant leak check when the outdoor temperature is above 20°C.

INFORMATION

If all procedures listed above have been performed and the problem is still present, contact the helpdesk.

2.3.159 E-4 – Refrigerant leak check is interrupted - too low pressure is detected

Trigger	Effect	Reset
Too low pressure is detected during refrigerant leak check mode.	Refrigerant leak check function CANNOT be performed.	Restart leak detection operation.

To solve the error code

INFORMATION

It is recommended to perform the checks in the listed order.

1. Perform a check of the refrigerant high pressure sensor. See "3.15 Refrigerant high pressure sensor" [▸ 284].

   Possible cause: Faulty refrigerant high pressure sensor.

2. Perform a check of the refrigerant low pressure sensor. See "3.16 Refrigerant low pressure sensor" [▸ 288]

   Possible cause: Faulty refrigerant low pressure sensor.

3. Restart leak detection operation.

INFORMATION

If all procedures listed above have been performed and the problem is still present, contact the helpdesk.

2.3.160 E-5 – Refrigerant leak check cannot be performed - a unit which is not compatible with leak detection function is installed

Trigger	Effect	Reset
Leak detection is NOT supported for some of the installed indoor units (e.g. Hydrobox, ...).	Refrigerant leak check function CANNOT be performed.	No reset required.

To solve the error code

1 No corrective action needed, unless there is an indoor unit in the system which is refrigerant leak function incompatible.

2.3.161 NG – Refrigerant leak check function detects refrigerant leak

Trigger	Effect	Reset
Result of refrigerant leak check function deviates more than 15% compared to result of test run.	Result of last 3 refrigerant leak check function is stored on Mode 1 items 29-30-31, see "6.9 Field settings" [▶ 380].	No reset required.

To solve the error code

INFORMATION

It is recommended to perform the checks in the listed order.

1 Check for leaks in the refrigerant circuit. Look for oil traces on the unit(s). Check the brazing points on the field piping. Perform a leak test, see "4.2 Refrigerant circuit" [▶ 306].

Possible cause: Leak in the refrigerant circuit.

2 Indoor and/or outdoor temperature(s) of test run and latest leak check function should NOT differ too much. Consult the logbook and compare temperatures to auto-charge time. Perform a new leak test when the indoor and outdoor temperatures do NOT deviate too much compared to the time of test run.

Possible cause: Indoor and/or outdoor temperature(s) of test run and latest leak check function is drastically different from each other.

3 Check if indoor unit layout has changed since latest test run. If this is the case, a new test run needs to be performed.

Possible cause: Indoor unit layout has changed since latest test run.

INFORMATION

If all procedures listed above have been performed and the problem is still present, contact the helpdesk.

2.3.162 OK – Refrigerant leak check function detects no refrigerant leak

Trigger	Effect	Reset
Result of refrigerant leak check function is within 15% range, compared to result of test run.	Unit will operate normally.	No reset required.

To solve the error code

1 No corrective action needed.

2.3.163 Indoor unit related error codes

Error code	Description
A0-00	Main PCB error
A1-00	EEPROM error on main PCB
A3-00	Float switch open during thermo ON in cooling mode
A6-01	Fan motor locked
A6-10	Fan motor overcurrent
A6-11	Fan position detection error
A7-00	No detection contact swing motor
A8-01	Fan motor power supply voltage error
A9-01	Expansion valve motor fault detection
A9-02	Expansion valve bleeding
AF-00	Float switch open during thermo OFF
AH-03	Transmission Error between main PCB and self-cleaning PCB
AH-04	Self-cleaning Unit - Dust detection sensor error
AH-05	Self-cleaning Unit - Dust collection error
AH-06	Self-cleaning Unit - Air filter rotation error
AH-07	Self-cleaning Unit - Damper rotation error
AH-08	Self-cleaning Unit - Filter cleaning time error
AH-09	Self-cleaning Unit - Auto self-cleaning disabled
AH-14	Self-cleaning Unit – Cleaning Error – Brush motor
AH-15	Self-cleaning Unit –Cleaning Error – Cylinder motor
AH-16	Self-cleaning Unit – Limit switch error – brush motor slide
AH-17	Self-cleaning Unit –Limit switch error – cylinder motor side
AJ-01	Capacity adapter missing
AJ-02	Incorrect expansion valve motor
C1-01	Transmission error between main PCB and fan motor PCB
C1-02	Transmission error between main PCB and auxiliary PCB
C4-02	Liquid thermistor short circuit
C4-03	Liquid thermistor open circuit

Error code	Description
C5-02	Gas thermistor short circuit
C5-03	Gas thermistor open circuit
C6-01	Combination error: Main PCB – Fan motor PCB
C6-05	Indoor Unit PCB Abnormality
C9-02	Air thermistor short circuit
C9-03	Air thermistor open circuit
CE-01	No signal from optional presence sensor
CE-02	No signal from optional floor temperature sensor
CE-03	Faulty signal from floor temperature sensor
CE-04	High temperature detection or electrical noise on floor temperature sensor
CJ-02	Air thermistor on Remote controller short circuit
CJ-03	Air thermistor on Remote controller open circuit
U4-01	Communication error between indoor unit and outdoor unit
U9-01	Error on other indoor unit
UA-13	Combination error: indoor unit – outdoor unit (refrigerant)
UA-15	Outdoor unit not compatible with self-cleaning panel
UE-00	Communication error with central controller device

2.3.164 Overview of error codes

Main code	Sub code			Description
	Main	Sub 1	Sub 2	
E1	01			Outdoor Unit Main PCB [A1P] Error
	02			Outdoor Unit Main PCB [A1P] Error
E2	01	02	03	Current Leak Detection
	06	07	08	Open Circuit on Earth Leakage Detection Core
E3	01	03	05	Actuation of High Pressure Switch
	02	04	06	High Pressure Error
	07			High Pressure Switch Reset Error
	13	14	15	Liquid Stop Valve Check Error
	18			Actuation of High Pressure Switch During Test Run
	20	21	22	X4A Jumper open on PCB A1P
E4	01	02	03	Low Pressure Error
E5	01	02	03	Compressor Overload Error [M1C]
	07	08	09	Compressor Overload Error [M2C]
E6	17	19	21	Inverter Overcurrent Error
	18	20	22	Inverter Overcurrent Error
E7	01	13	25	Outdoor Unit Fan Motor(M1F) Error
	02	14	26	Outdoor Unit Fan Motor(M2F) Error
	05	17	29	Outdoor Unit Fan Motor (M1F) Overcurrent Error
	06	18	30	Outdoor Unit Fan Motor (M2F) Overcurrent Error
	09	21	33	Fan Inverter PCB (A4P) IPM* Overheated
	10	22	34	Fan Inverter PCB (A7P) IPM* Overheated
E9	01	05	08	Electronic Expansion Valve (Y1E) Malfunction
	03	06	09	Electronic Expansion Valve (Y2E) Malfunction
	04	07	10	Electronic Expansion Valve (Y3E) Malfunction
	20	21	22	Failure Detection on Y1E
	23	24	25	Failure Detection on Y2E
	26	27	28	Electronic Expansion Valve (Y4E) Malfunction
	48	49	50	Electronic Expansion Valve Overcurrent Error
	51	52	53	Electronic Expansion Valve Thermal Cutting Error
	54	55	56	Electronic Expansion Valve Defective Circuit
F3	01	03	05	Compressor Discharge Temperature Too High
	20	21	22	Compressor Body Temperature Too High
F4	01			Wet Operation Caution
F6	02			Refrigerant Overcharge Detection During Test Run

Main code	Sub code			Description
	Main	Sub 1	Sub 2	
H3	02	04	06	Transmission Error on Inverter PCB A3P
	03	05	07	Transmission Error on Inverter PCB A6P
H9	01	02	03	Ambient Temperature Thermistor Malfunction
HA	-			Defrost Fail Alarm
J3	16	22	28	Discharge Temperature Thermistor (R21T) Open Circuit
	17	23	29	Discharge Temperature Thermistor (R21T) Short Circuit
	18	24	30	Discharge Temperature Thermistor (R22T) Open Circuit
	19	25	31	Discharge Temperature Thermistor (R22T) Short Circuit
	38	42	44	Compressor Body Temperature Thermistor (R9T) Open Circuit
	39	43	45	Compressor Body Temperature Thermistor (R9T) Short Circuit
	47	49	51	Compressor Body Temperature Thermistor (R8T) Open Circuit
	48	50	52	Compressor Body Temperature Thermistor(R8T) Short Circuit
	56	57	58	High Discharge Temperature
	59	60	61	Discharge Temperature Thermistors Cross-Wired
J5	01	03	05	Suction Temperature Thermistor (R3T) Malfunction
J6	01	02	03	De-icer Temperature Thermistor (R7T) Malfunction
J7	06	07	08	Liquid Temperature Thermistor (R5T) Malfunction
J8	01	02	03	Outdoor Heat Exchanger Liquid Temperature Thermistor (R4T) Malfunction
J9	01	02	03	Gas Temperature Thermistor Malfunction
JA	06	08	10	High Pressure Sensor (S1NPH) Open Circuit or Out of Range
	07	09	11	High Pressure Sensor (S1NPH) Short Circuit or Out of Range
JC	06	08	10	Low Pressure Sensor (S1NPL) Open Circuit or Out of Range
	07	09	11	Low Pressure Sensor (S1NPL) Short Circuit or Out of Range

Main code	Sub code			Description
	Main	Sub 1	Sub 2	
L1	01	07	11	Inverter PCB A3P Malfunction
	02	08	12	Inverter PCB A3P Current Detection Primary Circuit
	03	09	13	Inverter PCB A3P Current Detection Secondary Circuit
	04	10	14	Power Transistor Error on Inverter PCB A3P
	05	15	16	Inverter PCB A3P Hardware Fault
	17	22	42	Inverter PCB A6P Malfunction
	18	23	43	Inverter PCB A6P Current Detection Primary Circuit
	19	24	44	Inverter PCB A6P Current Detection Secondary Circuit
	20	25	45	Power Transistor Error on Inverter PCB A6P
	21	26	46	Inverter PCB A6P Hardware Fault
	28	32	34	Fan Inverter PCB A4P EEPROM Error
	29	33	35	Fan Inverter PCB A7P EEPROM Error
	36	38	40	Inverter PCB A3P EEPROM Error
	37	39	41	Inverter PCB A6P EEPROM Error
	47	49	51	Inverter PCB A3P 16 V DC Abnormality
	48	50	52	Inverter PCB A6P 16 V DC Abnormality
L2	01	02	03	Power Supply Abnormality During Test Run
	04	05	06	Power Supply Abnormality During Normal Operation
L4	01	02	03	Inverter PCB A3P High Fin Temperature
	06	18	20	Fan Inverter PCB A4P High Fin Temperature
	07	19	21	Fan Inverter PCB A7P High Fin Temperature
	09	10	11	Inverter PCB A6P High Fin Temperature
L5	03	05	07	Output Overcurrent Detection on Inverter PCB A3P
	14	15	16	Output Overcurrent Detection on Inverter PCB A6P
L8	03	06	07	Overcurrent on Inverter PCB A3P except start-up
	11	12	13	Overcurrent on Inverter PCB A6P except start-up
L9	01	05	06	Stall Prevention by Inverter PCB A3P
	10	11	12	Stall Prevention by Inverter PCB A6P
	13	14	15	Inverter PCB A3P Output Phase Abnormality
	16	17	18	Inverter PCB A6P Output Phase Abnormality
LC	01			Transmission Abnormality Main PCB A1P to A3P, A6P, A4P, A7P
	14	15	16	Transmission Error Main PCB A1P - Inverter PCB A3P
	19	20	21	Transmission Error Main PCB A1P - Fan Inverter PCB A4P
	24	25	26	Transmission Error Main PCB A1P - Fan Inverter PCB A7P
	30	31	32	Transmission Error Main PCB A1P - Inverter PCB A6P

Main code	Sub code			Description
	Main	Sub 1	Sub 2	
P1	01	02	03	Open Phase or Unbalanced Power Supply Detection by Inverter PCB A3P
	07	08	09	Open Phase or Unbalanced Power Supply Detection by Inverter PCB A6P
P2	00			Refrigerant Auto-charge Interrupted
P4	01	04	05	Fin Thermistor Fault on Inverter PCB A3P
	02	15	17	Fin Thermistor Fault on Fan Inverter PCB A4P
	03	16	18	Fin Thermistor Fault on Fan Inverter PCB A7P
	06	07	08	Fin Thermistor Fault on Inverter PCB A6P
P8	-			Freeze-Up During Refrigerant Auto-Charge
P9	-			Refrigerant Auto-Charge Finished Normally
PA	-			No Refrigerant in Refrigerant Cylinder During Auto-Charge
PE	-			Refrigerant Auto-Charge on Last Stage
PF	-			Long Test Run Failed
PJ	04	05	06	Capacity Setting Mismatch for Inverter PCB A3P
	09	15	16	Capacity Setting Mismatch for Fan Inverter PCB A4P
	10	17	18	Capacity Setting Mismatch for Fan Inverter PCB A7P
	12	13	14	Capacity Setting Mismatch for Inverter PCB A6P
U0	05			Refrigerant Shortage Detection During Cooling
	06			Refrigerant Shortage Detection During Heating
	08	09	10	Refrigerant Shortage Detection by High Pressure Sensor
U1	01	05	07	Reverse Phase Detection
	04	06	08	Reverse Phase Detection
U2	01	08	11	Inverter Circuit Power Supply Abnormality - Inverter PCB A3P Abnormal Voltage
	02	09	12	Inverter Circuit Power Supply Abnormality - Inverter PCB A3P Phase Loss
	03	10	13	Inverter Circuit Power Supply Abnormality - Inverter PCB A3P DC Circuit Not Charging
	22	25	28	Inverter Circuit Power Supply Abnormality - Inverter PCB A6P Abnormal Voltage
	23	26	29	Inverter Circuit Power Supply Abnormality - Inverter PCB A6P Phase Loss
	24	27	30	Inverter Circuit Power Supply Abnormality - Inverter PCB A6P DC Circuit Not Charging
U3	02			Test Run Interrupted Manually
	03			Test Run Not Performed Yet
	04			Test Run Ended Abnormally
	05			Test Run Aborted on Initial Transmission
	06			Test Run Aborted on Normal Transmission
	07			Transmission abnormality on Test Run
	08			Transmission abnormality on Test Run

Main code	Sub code			Description
	Main	Sub 1	Sub 2	
U4	01			Communication Error on Q1-Q2 Transmission Line
	03			Communication Error on F1-F2 Transmission Line
	15			Unable to Start Test Run
U7	01			Transmission Abnormality Between Systems - DTA104A61, DTA104A62 Error
	02			Transmission Abnormality Between Systems - DTA104A61, DTA104A62 Error
	03			Transmission Error Between Main Outdoor Unit and Sub 1 Outdoor Unit
	04			Transmission Error Between Main Outdoor Unit and Sub 2 Outdoor Unit
	05			Multi System Abnormality
	06			Multi System Address Abnormality
	07			More Than 3 Outdoor Units on Q1-Q2 Transmission
	11			Excess Indoor Units Detected on Test Run
	24			Duplication of Address Setting on Multiple DTA104A61,62 Installation
U9	01			Other Indoor Unit Has Error
UA	00			Combination Abnormality
	03			Combination Abnormality - Mix of R22, R407C, R410A Type Units Detected
	16			Combination Abnormality - More Than 64 Indoor Units Detected On Same System
	17			Combination Abnormality - Local Setting Abnormality
	18			Combination Abnormality - Outdoor Unit Not Compatible With Indoor Units (Refrigerant Type)
	19			Combination Abnormality - Local Set Alarm
	20			Combination Abnormality - Non Compatible Outdoor Unit in Multi Combination
	21			Combination Abnormality - BPMK Unit(s) Detected
	31			Combination Abnormality - Multi Combination Abnormality
	38			Combination Abnormality - Altherma Hydro Unit(s) Detected
	39			Combination Abnormality - Incorrect Combination
	49			Combination Abnormality - Wrong unit Combination
UF	01			Wiring and Piping Mismatch - Auto Address Inconsistency on F1-F2 Transmission
	05			Wiring and Piping Mismatch - Stop Valve(s) Closed or Incorrect
	11			Wiring and Piping Mismatch - Excess Connection Ratio
UH	01			Auto Address Failure
	02			Auto Address Failure
E-1	-			Refrigerant Leak Check is not possible
E-2	-			Refrigerant Leak Check cannot be performed - Indoor Air Temperature is out of range.
E-3	-			Refrigerant Leak Check cannot be performed - Outdoor Air Temperature is out of range.
E-4	-			Refrigerant Leak Check is interrupted - Too Low Pressure is Detected

Main code	Sub code			Description
	Main	Sub 1	Sub 2	
E-5	-			Refrigerant Leak Check cannot be performed - A unit which is not compatible with Leak Detection Function is installed
NG	-			Refrigerant Leak Check Function detects refrigerant leak
OK	-			Refrigerant Leak Check Function detects no refrigerant leak

2.4 Symptom based troubleshooting

2.4.1 Normal operating conditions

Below items are a guideline on how to check normal operating conditions of the unit. Still, values are for reference ONLY and working conditions outside of this range do NOT necessarily address abnormalities and errors. Operating conditions are a result of several items to check together.

Item	Description	Normal value
Discharge superheat	Discharge pipe temperature – condensation temperature	25 K to 45 K

Discharge superheat = discharge pipe temperature – condensation temperature

- Discharge pipe temperature: Read out from discharge pipe thermistor R21T/R22T depending on the compressor.
- Condensation temperature: Calculated by main PCB from the pressure read-out of the high pressure sensor.

Higher discharge superheat may result from refrigerant shortage or compressor internal by-pass.

Lower discharge superheat may result from low suction superheat which is caused by wet operation.

Item	Description	Normal value
Suction superheat	Suction temperature – evaporation temperature	5 K

Suction superheat = suction temperature – evaporation temperature

- Suction temperature: Read out from suction thermistor R3T
- Evaporation temperature: Calculated by main PCB from the pressure read-out of the low pressure sensor.

Suction superheat may be high if difference between [indoor set temperature – indoor air temperature] is too high and will result in high discharge superheat.

Suction superheat may be low if:

- Difference between [indoor set temperature – indoor air temperature] is too low
- Discharge superheat is too low (<20 K)
- Outdoor unit judges wet operation

2.4.2 Symptom: The system does not operate

- The air conditioner does not start immediately after the ON/OFF button on the user interface is pressed. If the operation lamp lights, the system is in normal condition. To prevent overloading of the compressor motor, the air conditioner starts 5 minutes after it is turned ON again in case it was turned OFF just before. The same starting delay occurs after the operation mode selector button was used.
- If "Under Centralized Control" is displayed on the user interface, pressing the operation button causes the display to blink for a few seconds. The blinking display indicates that the user interface cannot be used.

- The system does not start immediately after the power supply is turned on. Wait one minute until the micro computer is prepared for operation.

2.4.3 Symptom: Cool/Heat cannot be changed over

- When the display shows (change-over under centralized control), it shows that this is a slave user interface.
- When the cool/heat changeover remote control switch is installed and the display shows (change-over under centralized control), this is because cool/ heat changeover is controlled by the cool/ heat changeover remote control switch. Ask your dealer where the remote control switch is installed.

2.4.4 Symptom: Fan operation is possible, but cooling and heating do not work

Immediately after the power is turned on. The micro computer is getting ready to operate and is performing a communication check with all indoor units. Please wait 12 minutes maximally until this process is finished.

2.4.5 Symptom: The fan speed does not correspond to the setting

The fan speed does not change even if the fan speed adjustment button is pressed. During heating operation, when the room temperature reaches the set temperature, the outdoor unit goes off and the indoor unit changes to whisper fan speed. This is to prevent cold air blowing directly on occupants of the room. The fan speed will not change even when another indoor unit is in heating operation, if the button is pressed.

2.4.6 Symptom: The fan direction does not correspond to the setting

The fan direction does not correspond with the user interface display. The fan direction does not swing. This is because the unit is being controlled by the micro computer.

2.4.7 Symptom: White mist comes out of a unit (Indoor unit)

- When humidity is high during cooling operation. If the interior of an indoor unit is extremely contaminated, the temperature distribution inside a room becomes uneven. It is necessary to clean the interior of the indoor unit. Ask your dealer for details on cleaning the unit. This operation requires a qualified service person.
- Immediately after the cooling operation stops and if the room temperature and humidity are low. This is because warm refrigerant gas flows back into the indoor unit and generates steam.

2.4.8 Symptom: White mist comes out of a unit (Indoor unit, heat exchanger unit)

When the system is changed over to heating operation after defrost operation. Moisture generated by defrost becomes steam and is exhausted.

2.4.9 Symptom: The user interface reads "U4" or "U5" and stops, but then restarts after a few minutes

This is because the user interface is intercepting noise from electric appliances other than the air conditioner. The noise prevents communication between the units, causing them to stop. Operation automatically restarts when the noise ceases. A power reset may help to remove this error.

2.4.10 Symptom: Noise of air conditioners (Indoor unit)

- A "zeen" sound is heard immediately after the power supply is turned on. The electronic expansion valve inside an indoor unit starts working and makes the noise. Its volume will reduce in about one minute.
- A continuous low "shah" sound is heard when the system is in cooling operation or at a stop. When the drain pump (optional accessories) is in operation, this noise is heard.
- A "pishi-pishi" squeaking sound is heard when the system stops after heating operation. Expansion and contraction of plastic parts caused by temperature change make this noise.
- A low "sah", "choro-choro" sound is heard while the indoor unit is stopped. When another indoor unit is in operation, this noise is heard. In order to prevent oil and refrigerant from remaining in the system, a small amount of refrigerant is kept flowing.

2.4.11 Symptom: Noise of air conditioners (Indoor unit, outdoor unit)

- A continuous low hissing sound is heard when the system is in cooling or defrost operation. This is the sound of refrigerant gas flowing through both indoor and outdoor units.
- A hissing sound which is heard at the start or immediately after stopping operation or defrost operation. This is the noise of refrigerant caused by flow stop or flow change.

2.4.12 Symptom: Noise of air conditioners (Outdoor unit)

When the tone of operating noise changes. This noise is caused by the change of frequency.

2.4.13 Symptom: Dust comes out of the unit

When the unit is used for the first time in a long time. This is because dust has gotten into the unit.

2.4.14 Symptom: The units can give off odours

The unit can absorb the smell of rooms, furniture, cigarettes, etc., and then emit it again.

2.4.15 Symptom: The outdoor unit fan does not spin

During operation. The speed of the fan is controlled in order to optimise product operation.

2.4.16 Symptom: The display shows "88"

This is the case immediately after the main power supply switch is turned on and means that the user interface is in normal condition. This continues for 1 minute.

2.4.17 Symptom: The compressor in the outdoor unit does not stop after a short heating operation

This is to prevent refrigerant from remaining in the compressor. The unit will stop after 5 to 10 minutes.

2.4.18 Symptom: The inside of an outdoor unit is warm even when the unit has stopped

This is because the crankcase heater is warming the compressor so that the compressor can start smoothly.

2.4.19 Symptom: Hot air can be felt when the indoor unit is stopped

Several different indoor units are being run on the same system. When another unit is running, some refrigerant will still flow through the unit.

2.4.20 Symptom: Unit operation problems

Symptom	Possible failure	Root cause	Repair
Unit(s) do not operate	Unit(s) do not operate	Missing or abnormal power supply (reverse phase, missing phase, abnormal voltage...) to the outdoor unit	Check Power Supply. See "4.1 Electrical circuit" [▶ 299]
		Indoor unit(s) do not receive power supply	Check power supply to the indoor unit(s), check if HAP Led blinks, check fuse(s) on indoor unit board. Also check BPMKs in case indoor unit is of RA type.
		Mismatch of combination of outdoor unit and indoor unit	Check error codes. Check compatibility
		Out of operation range	Check operation range on databook
	All indoor units show icon blinking continuously	No Cool/Heat master is set	Select Cool/Heat Master by pressing Operating Mode button on the desired unit. The symbol will fade-away for Cool/Heat Master and will be fixed (not blinking) for the remaining indoor units
	Indoor unit(s) show icon blinking temporarily when ON button is pressed	The unit(s) are either under Centralized Control and prohibited to operate or under Forced OFF operation by T1/T2 input	Release prohibitions from central controller or check T1/T2 contact status or check indoor unit field setting for forced off
	Indoor units show fan-only mode	Transmission initialization not completed	See "To check F1-F2 transmission" [▶ 301]. Perform transmission re-initialization
			Check transmission wiring
			Check indoor unit PCBs
			Check outdoor unit main PCB, see "3.9 Main PCB" [▶ 243]
Operation sometimes stops	Power failure	A power failure consecutively more than 2 cycles may stop the air conditioner operation	Restore power supply. See "4.1 Electrical circuit" [▶ 299]

Symptom	Possible failure	Root cause	Repair
Operation stops and then restarts after 3 minutes.	Outdoor unit performing 'retry' operation	Retry mode triggered by an error	Check field setting 1-23, 1-24, 1-25 for latest retry content. See "6.9 Field settings" [▶ 380]. Refer to error code found for further troubleshooting.
Unit operates but does not cool or does not heat	Piping or wiring mismatch	Tranmission or piping problem	Correct piping, wiring
	Abnormal refrigerant amount	Outdoor unit may be overcharged or lacking refrigerant	Check refrigerant amount. See "4.2 Refrigerant circuit" [▶ 306]
	Incorrect thermistor values	Thermistors not in their location, miswiring or faulty thermistor	Check thermistors, see "3.17 Thermistors" [▶ 292]
	Incorrect expansion valve operation	Expansion valve not operating correctly	Check expansion valves. See "3.5 Expansion valve" [▶ 201]
	Cross piping/wiring among different outdoor unit systems	Indoor unit transmission line and piping is not connected to the same outdoor unit system	Correct piping, wiring

Symptom	Possible failure	Root cause	Repair
Disturbing operation noise and vibration	Faulty Inverter PCB output	Instable output voltage from inverter PCB to compressor(s)	Check Power Supply, see "4.1 Electrical circuit" [▶ 299]. Restore the power supply in conform with the requirements. Check inverter PCB(s) and perform a power transistor check, see "3.8 Inverter PCB" [▶ 225]. Check compressor(s), see "3.2 Compressor" [▶ 182]
	Installation faults	Unit not installed according to installation manual	Check installation manual. Correct necessary items. Leave required space to outdoor unit for operation
	Wet operation	Liquid compression	Check thermistors. See "3.17 Thermistors" [▶ 292]. Check for refrigerant overcharge, see "4.2 Refrigerant circuit" [▶ 306]. Check expansion valves for heat exchanger that run as evaporator. Check superheat. Recover refrigerant and weigh. Charge refrigerant to the correct amount
	Flash gas on liquid piping	Expansion valve fault of refrigerant shortage	Check expansion valves for heat exchangers that run as evaporator. Check superheat. Recover refrigerant and weigh. Charge refrigerant to the correct amount

2.4.21 Other symptoms

Mode: Cooling	Low pressure	High pressure	Running current
Dirty air filters	Lower than normal	Lower than normal	Lower than normal
Air by-pass between air inlet/outlet @indoor unit	Lower than normal	Lower than normal	Lower than normal
Non condensables (i.e air) in refrigerant	Higher than normal	Higher than normal	Higher than normal
Moisture in refrigerant *1	Lower than normal	Lower than normal	Lower than normal
Impurities (dust, burr, ...) in refrigerant *2	Lower than normal	Lower than normal	Lower than normal
Refrigerant shortage	Lower than normal	Lower than normal	Lower than normal
Insufficient compression *3	Higher than normal	Lower than normal	Lower than normal

Mode: Heating	Low pressure	High pressure	Running current
Dirty air filters	Higher than normal	Higher than normal	Higher than normal
Air by-pass between air inlet/outlet @indoor unit	Higher than normal	Higher than normal	Higher than normal
Non condensables (i.e air) in refrigerant	Higher than normal	Higher than normal	Higher than normal
Moisture in refrigerant *1	Lower than normal	Lower than normal	Lower than normal
Impurities (dust, burr, ...) in refrigerant *2	Lower than normal	Lower than normal	Lower than normal
Refrigerant shortage	Lower than normal	Lower than normal	Lower than normal
Insufficient compression *3	Higher than normal	Lower than normal	Lower than normal

*1 Water in the refrigerant freezes inside the electronic expansion valve and is basically the same phenomenon as pump-down.

*2 Dust, burr in refrigerant clogs refrigerant filters and results with symptoms of pump-down operation.

*3 Pressure difference between high and low pressure decreases.

3 Components

CAUTION

When replacing a component ALWAYS make sure the correct spare part for your unit is installed.

3.1 4-way valve

3.1.1 Main 4-way valve

Checking procedures

INFORMATION

It is recommended to perform the checks in the listed order.

To perform a mechanical check of the 4-way valve

Prerequisite: Stop the unit operation via the central controller.

Prerequisite: Turn OFF the respective circuit breaker.

1 Remove the required plate work, see "3.13 Plate work" [▶ 270].

DANGER: RISK OF BURNING/SCALDING

The coil gets hot while energized. Wait for it to cool down.

2 Verify that the screw is firmly fixing the coil to the valve body.

3 Check if any damage or burst is present.

Is the 4-way valve coil firmly fixed and not visually damaged?	Action
Yes	Perform an electrical check of the 4-way valve, see "Checking procedures" [▶ 169].
No	Fix or replace the 4-way valve coil, see "Repair procedures" [▶ 173].

To perform an electrical check of the 4-way valve

1 First perform a mechanical check of the 4-way valve, see "Checking procedures" [▶ 169].

2 Unplug the 4-way valve connector from the appropriate PCB.

3 Measure the resistance of the 4-way valve coil between the pins of the 4-way valve connector.

Result: The measured value must be 1,7 kΩ ± 10%.

Is the measured value correct?	Action
Yes	Continue with the next step.
No	Replace the 4-way valve coil, see "Repair procedures" [▶ 173].

When outdoor temperature is mild and unit can switch between heating and cooling

INFORMATION

This procedure is ONLY possible when the outdoor temperature is within the temperature range for both `Heating` and `Cooling` operation mode. See the databook on Business Portal for the temperature range of the operation modes.

1. Connect the 4-way valve connector to the appropriate PCB.
2. Turn ON the power using the respective circuit breaker.
3. Activate `Heating` operation via the Cool/Heat master user interface.

CAUTION

It is NOT possible to activate operation modes with another user interface than the Cool/Heat master user interface.

4. With the 4-way valve connector connected to the PCB, measure the voltage on the 4-way valve connection of the PCB.

   Result: The measured voltage MUST be 230 V AC.
5. De-activate `Heating` and activate `Cooling` operation via the Cool/Heat master user interface.
6. Measure the voltage on the 4-way valve connection on the PCB.

   Result: The measured voltage MUST be 0 V AC.

Are the measured voltages correct?	Action
Yes	Perform a position check of the 4-way valve, see "Checking procedures" [▸ 169].
No	Perform a check the main PCB, see "3.9 Main PCB" [▸ 243].

When outdoor temperature does not allow the unit to run in cooling or heating mode

INFORMATION

Follow this procedure when the outdoor temperature is outside the temperature range for one of the operation modes (`Heating` or `Cooling`). The unit CANNOT operate in the mode for which the outdoor temperature is outside its temperature range. See the databook on Business Portal for the temperature range of the operation modes.

1. Connect the 4-way valve connector to the appropriate PCB.
2. Turn ON the power using the respective circuit breaker.
3. With the unit operating, connect the service monitoring tool to the unit and check whether the unit is in one of the following operation modes in which the 4-way valve is energized:

   RXYQ-U and RXYTQ-U units:
   - Heating mode

   RYYQ-U units:
   - Heating mode and oil return in heating mode
   - Defrost operation

RYMQ-U units:
- Heating mode and oil return in heating mode
- Defrost operation

Is this the case?	Action
No	Skip the next step of this procedure.
Yes	Perform the next step of this procedure.

4 With the 4-way valve connector connected to the PCB, measure the voltage on the 4-way valve connection of the PCB.

Result: The measured voltage MUST be 230 V AC.

Is the measured voltage correct?	Action
Yes	Perform a position check of the 4-way valve, see "Checking procedures" [▶ 169].
No	Perform a check the main PCB, see "3.9 Main PCB" [▶ 243].

5 If, according to the service monitoring tool, the unit is in one of the following operation modes in which the 4-way valve is NOT energized:

RXYQ-U and RXYTQ-U units:
- Oil return operation and defrost operation in heating mode
- Oil return operation in cooling mode
- Cooling mode

RYYQ-U units:
- Cooling mode
- Oil return operation in cooling mode

RYMQ-U units:
- Cooling mode
- Oil return operation in cooling mode

6 With the 4-way valve connector connected to the PCB, measure the voltage on the 4-way valve connection of the PCB.

Result: The measured voltage MUST be 0 V AC.

Is the measured voltage correct?	Action
Yes	Perform a position check of the 4-way valve, see "Checking procedures" [▶ 169].
No	Perform a check the main PCB, see "3.9 Main PCB" [▶ 243].

To perform a position check of the 4-way valve

1 First perform an electrical check of the 4-way valve, see "Checking procedures" [▶ 169].

When outdoor temperature is mild and unit can switch between heating and cooling

INFORMATION

This procedure is ONLY possible when the outdoor temperature is within the temperature range for both `Heating` and `Cooling` operation mode. See the databook on Business Portal for the temperature range of the operation modes.

1 Activate **Heating** operation via the Cool/Heat master user interface.

CAUTION

It is NOT possible to activate operation modes with another user interface than the Cool/Heat master user interface.

INFORMATION

It is recommended to connect the service monitoring tool to the unit and verify the operation mode of the 4-way valve.

2 Check with a contact thermometer (or by touching) if the flow through the 4-way valve corresponds with the flow shown in the flow diagram. (See "6.3 Piping diagram" [▸ 330]).

Is the flow correct?	Action
Yes	Skip the next step of this procedure.
No	Perform the next step of this procedure.

3 Connect a manifold to one of the service ports of the refrigerant circuit and check the pressure (suction, discharge). Compare with normal operation conditions of the unit.

Refrigerant pressure correct?	Action
Yes	Replace the body of the 4-way valve, see "Repair procedures" [▸ 173].
No	Leaks may be found in the refrigerant circuit. Perform a pressure test of the refrigerant circuit, see "4.2.1 Checking procedures" [▸ 306].

4 De-activate **Heating** and activate **Cooling** operation via the Cool/Heat master user interface.

5 Check with a contact thermometer (or by touching) if the flow through the 4-way valve corresponds with the flow shown in the flow diagram. (See "6.3 Piping diagram" [▸ 330]).

Is the flow correct?	Action
Yes	4-way valve is OK. Return to the troubleshooting of the specific error and continue with the next procedure.
No	Replace the body of the 4-way valve, see "Repair procedures" [▸ 173].

When outdoor temperature does not allow the unit to run in cooling or heating mode

INFORMATION

Follow this procedure when the outdoor temperature is outside the temperature range for one of the operation modes (**Heating** or **Cooling**). The unit CANNOT operate in the mode for which the outdoor temperature is outside its temperature range. See the databook on Business Portal for the temperature range of the operation modes.

1 With the unit operating, connect the service monitoring tool to the unit and check in which of the following operation modes the unit is operating:

RXYQ-U and RXYTQ-U units:
- Heating mode and oil return in heating mode
- Defrost operation
- Cooling mode
- Oil return operation in cooling mode

RYYQ-U and RYMQ-U units:
- Oil return operation and defrost operation in heating mode
- Heating mode
- Cooling mode
- Oil return operation in cooling mode

2 Check with a contact thermometer (or by touching) if the flow through the 4-way valve corresponds with the flow shown in the flow diagram of the specific operation mode. (See "6.3 Piping diagram" [▸ 330]).

Is the flow correct?	Action
Yes	4-way valve is OK. Return to the troubleshooting of the specific error and continue with the next procedure.
No	Perform the next step of this procedure.

3 Connect a manifold to one of the service ports of the refrigerant circuit and check the pressure (suction, discharge). Compare with normal operation conditions of the unit.

Refrigerant pressure correct?	Action
Yes	Replace the body of the 4-way valve, see "Repair procedures" [▸ 173].
No	Leaks may be found in the refrigerant circuit. Perform a pressure test of the refrigerant circuit, see "4.2.1 Checking procedures" [▸ 306].

Repair procedures

To remove the 4-way valve coil

Prerequisite: Stop the unit operation via the central controller.

Prerequisite: Turn OFF the respective circuit breaker.

Prerequisite: Remove the required plate work, see "3.13 Plate work" [▸ 270].

Prerequisite: If needed, remove any parts to create more space for the removal of the 4-way valve coil.

1 Remove the screw and remove the 4-way valve coil from the 4-way valve body.

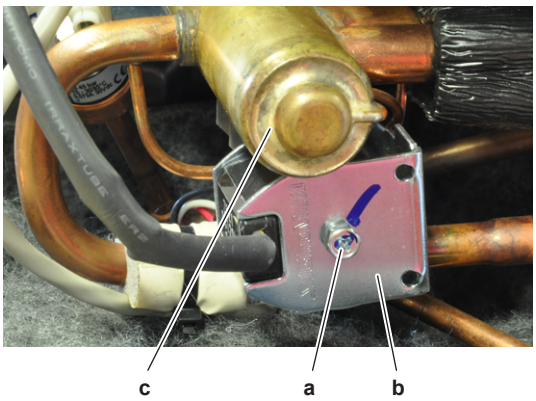

a Screw
b 4-way valve coil
c 4-way valve body

2 Cut all tie straps that fix the 4-way valve coil harness.

3 Unplug the 4-way valve connector from the appropriate PCB.

4 To install the 4-way valve coil, see "Repair procedures" [▶ 173].

To remove the 4-way valve body

Prerequisite: Recuperate the refrigerant from the refrigerant circuit, see "4.2.2 Repair procedures" [▶ 311].

1 Remove the 4-way valve coil from the 4-way valve body, see "Repair procedures" [▶ 173].

2 Remove and keep the putty (if installed) and the insulation (if installed) for re-use.

3 Supply nitrogen to the refrigerant circuit. The nitrogen pressure MUST NOT exceed 0.02 MPa.

4 Wrap a wet rag around the components near the 4-way valve pipes. Heat the brazing points of the 4-way valve pipes using an oxygen acetylene torch and remove the 4-way valve pipes from the refrigerant pipes using pliers.

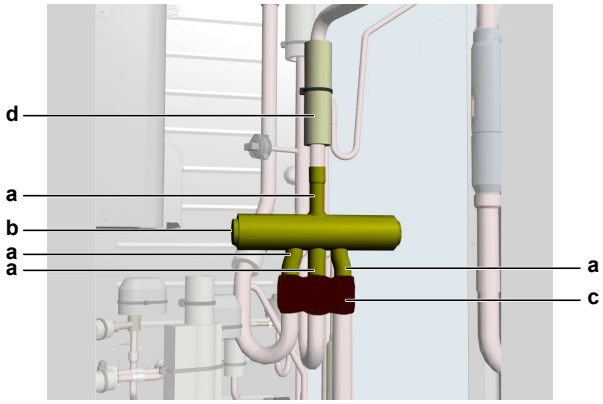

a 4-way valve pipe
b 4-way valve
c Putty
d Insulation

5 Stop the nitrogen supply when the piping has cooled down.

6 Remove the 4-way valve.

INFORMATION

It is ALSO possible to cut the component pipe(s) using a pipe cutter. Make sure to remove the remaining component pipe end(s) from the refrigerant pipes by heating the brazing point(s) of the component pipe(s) using an oxygen acetylene torch.

7 Install plugs or caps on the open pipe ends of the refrigerant piping to avoid dirt or impurities from entering the piping.

8 To install the 4-way valve body, see "Repair procedures" [▶ 173].

To install the 4-way valve body

1 Remove the plugs or caps from the refrigerant piping and make sure they are clean.

2 Remove the 4-way valve coil from the spare part 4-way valve body.

3 Install the 4-way valve body in the correct location and correctly oriented. Insert the pipe ends in the pipe expansions.

4 Supply nitrogen to the refrigerant circuit. The nitrogen pressure MUST NOT exceed 0.02 MPa.

5 Wrap a wet rag around the 4-way valve body and any other components near the 4-way valve and solder the 4-way valve pipes to the refrigerant pipes.

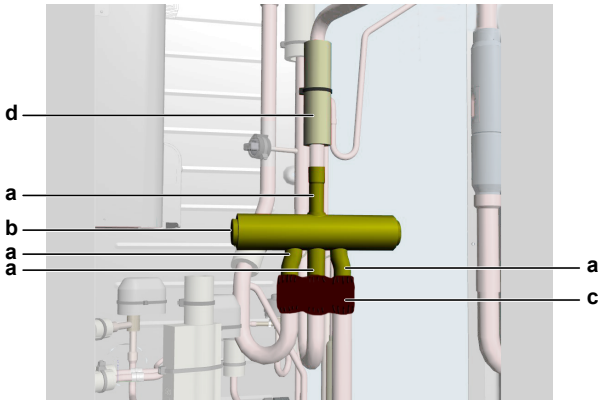

a 4-way valve pipe
b 4-way valve
c Putty
d Insulation

CAUTION

Overheating the valve will damage or destroy it.

6 After soldering is done, stop the nitrogen supply after the component has cooled-down.

7 Install the putty (if available) and the insulation (if available) in their original location.

8 Install the 4-way valve coil on the 4-way valve body, see "Repair procedures" [▶ 173].

9 Perform a pressure test, see "4.2.1 Checking procedures" [▶ 306].

10 Add refrigerant to the refrigerant circuit, see "4.2.2 Repair procedures" [▶ 311].

To install the 4-way valve coil

1 Install the 4-way valve coil on the 4-way valve body.

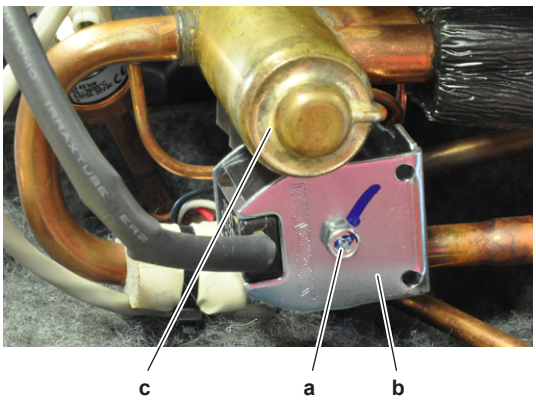

a Screw
b 4-way valve coil
c 4-way valve body

2 Install and tighten the screw to fix the 4-way valve coil.

3 Route the 4-way valve coil harness towards the appropriate PCB.

4 Connect the 4-way valve connector to the appropriate PCB.

> **WARNING**
> When reconnecting a connector to the PCB, make sure to connect it on the correct location and do NOT apply force, as this may damage the connector or connector pins of the PCB.

5 Fix the 4-way valve coil harness using new tie straps.

Is the problem solved?	Action
Yes	No further actions required.
No	Return to the troubleshooting of the specific error and continue with the next procedure.

3.1.2 Sub 4-way valve

Checking procedures

> **INFORMATION**
> It is recommended to perform the checks in the listed order.

To perform a mechanical check of the sub 4-way valve

Prerequisite: Stop the unit operation via the central controller.

Prerequisite: Turn OFF the respective circuit breaker.

1 Remove the required plate work, see "3.13 Plate work" [▶ 270].

> **DANGER: RISK OF BURNING/SCALDING**
> The coil gets hot while energized. Wait for it to cool down.

2 Verify that the screw is firmly fixing the coil to the valve body.

3 Check if any damage or burst is present.

Is the 4-way valve coil firmly fixed and not visually damaged??	Action
Yes	Perform a position check of the 4-way valve, see "Checking procedures" [▶ 176].
No	Fix or replace the 4-way valve coil, see "Repair procedures" [▶ 179].

To perform an electrical check of the sub 4-way valve

Prerequisite: First perform a mechanical check of the 4-way valve, see "Checking procedures" [▶ 176].

1 Unplug the 4-way valve connector from the appropriate PCB.

2 Measure the resistance of the 4-way valve coil between the pins of the 4-way valve connector.

Result: The measured value must be 1,7 kΩ ± 10%.

Is the measured value correct?	Action
Yes	Continue with the next step.
No	Replace the 4-way valve coil, see "Repair procedures" [▶ 179].

3 Connect the 4-way valve connector to the appropriate PCB.

4 Turn ON the power using the respective circuit breaker.

5 With the unit operating, connect the service monitoring tool to the unit and check whether the unit is operating in one of the following operation modes in which the 4-way valve is energized:

RYYQ-U units:
- Heating mode and oil return in heating mode

RYMQ-U units:
- Heating mode and oil return in heating mode
- Defrost operation

Is this the case?	Action
No	Skip the next step of this procedure.
Yes	Perform the next step of this procedure.

6 With the 4-way valve connector connected to the PCB, measure the voltage on the 4-way valve connection of the PCB.

Result: The measured voltage MUST be 230 V AC.

Is the measured voltage correct?	Action
Yes	Perform a position check of the 4-way valve, see "Checking procedures" [▶ 169].
No	Perform a check the main PCB, see "3.9 Main PCB" [▶ 243].

7 If, according to the service monitoring tool, the unit is operating in one of the following operation modes in which the 4-way valve is NOT energized:

RYYQ-U units:
- Cooling mode
- Oil return operation in cooling mode
- Defrost operation

RYMQ-U units:
- Cooling mode
- Oil return operation in cooling mode

8 With the 4-way valve connector connected to the PCB, measure the voltage on the 4-way valve connection of the PCB.

Result: The measured voltage MUST be 0 V AC.

Is the measured voltage correct?	Action
Yes	Perform a position check of the 4-way valve, see "Checking procedures" [▸ 169].
No	Perform a check the main PCB, see "3.9 Main PCB" [▸ 243].

To perform a position check of the sub 4-way valve

1 First perform an electrical check of the 4-way valve, see "Checking procedures" [▸ 176].

2 With the unit operating, connect the service monitoring tool to the unit and check in which of the following operation modes the unit is operating:
- Heating mode and oil return in heating mode
- Defrost operation
- Cooling mode
- Oil return operation in cooling mode

3 Check with a contact thermometer (or by touching) if the flow through the 4-way valve corresponds with the flow shown in the flow diagram of the specific operation mode. (See "6.3 Piping diagram" [▸ 330]).

Is the flow correct?	Action
Yes	Skip the next step.
No	Perform the next step of this procedure.

4 Connect a manifold to one of the service ports of the refrigerant circuit and check the pressure (suction, discharge). Compare with normal operation conditions of the unit.

Refrigerant pressure correct?	Action
Yes	Replace the body of the 4-way valve, see "Repair procedures" [▸ 179].
No	Leaks may be found in the refrigerant circuit. Perform a pressure test of the refrigerant circuit, see "4.2.1 Checking procedures" [▸ 306].

5 Wait for the 4-way valve to switch to another operation mode (service monitoring tool) with opposite 4-way valve energizing conditions as the current operation mode and again perform an electrical check and a position check of the 4-way valve, see "Checking procedures" [▸ 176].

Is the flow correct?	Action
Yes	4-way valve is OK. Return to the troubleshooting of the specific error and continue with the next procedure.
No	Replace the body of the 4-way valve, see "Repair procedures" [▶ 179].

Repair procedures

To remove the 4-way valve coil

Prerequisite: Stop the unit operation via the central controller.

Prerequisite: Turn OFF the respective circuit breaker.

Prerequisite: Remove the required plate work, see "3.13 Plate work" [▶ 270].

Prerequisite: If needed, remove any parts to create more space for the removal of the 4-way valve coil.

1. Remove the screw and remove the 4-way valve coil from the 4-way valve body.

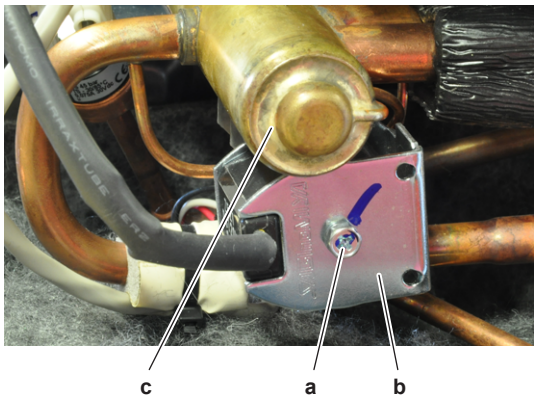

a Screw
b 4-way valve coil
c 4-way valve body

2. Cut all tie straps that fix the 4-way valve coil harness.
3. Disconnect the 4-way valve coil connector from the appropriate PCB.
4. To install the 4-way valve coil, see "Repair procedures" [▶ 179].

To remove the 4-way valve body

Prerequisite: Recuperate the refrigerant from the refrigerant circuit, see "4.2.2 Repair procedures" [▶ 311].

1. Remove the 4-way valve coil from the 4-way valve body, see "Repair procedures" [▶ 173].
2. Remove and keep the putty and the insulation for re-use.
3. Supply nitrogen to the refrigerant circuit. The nitrogen pressure MUST NOT exceed 0.02 MPa.
4. Wrap a wet rag around the components near the 4-way valve pipes. Heat the brazing points of the 4-way valve pipes using an oxygen acetylene torch and remove the 4-way valve pipes from the refrigerant pipes using pliers.

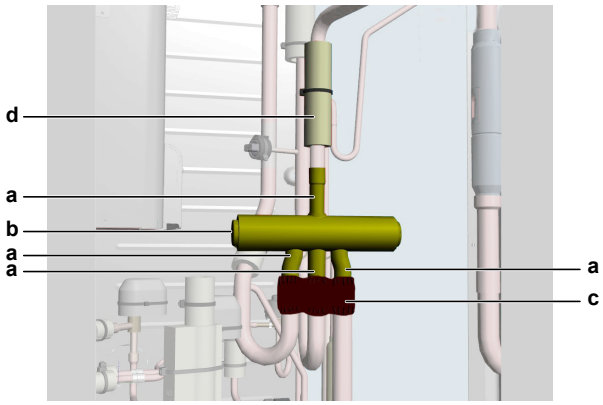

a 4-way valve pipe
b 4-way valve
c Putty
d Insulation

5 Stop the nitrogen supply when the piping has cooled down.

6 Remove the 4-way valve.

> **INFORMATION**
>
> It is ALSO possible to cut the component pipe(s) using a pipe cutter. Make sure to remove the remaining component pipe end(s) from the refrigerant pipes by heating the brazing point(s) of the component pipe(s) using an oxygen acetylene torch.

7 Install plugs or caps on the open pipe ends of the refrigerant piping to avoid dirt or impurities from entering the piping.

8 To install the 4-way valve body, see "Repair procedures" [▸ 179].

To install the 4-way valve body

1 Remove the plugs or caps from the refrigerant piping and make sure they are clean.

2 Remove the 4-way valve coil from the spare part 4-way valve body.

3 Install the 4-way valve body in the correct location and correctly oriented. Insert the pipe ends in the pipe expansions.

4 Supply nitrogen to the refrigerant circuit. The nitrogen pressure MUST NOT exceed 0.02 MPa.

5 Wrap a wet rag around the 4-way valve body and any other components near the 4-way valve and solder the 4-way valve pipes to the refrigerant pipes.

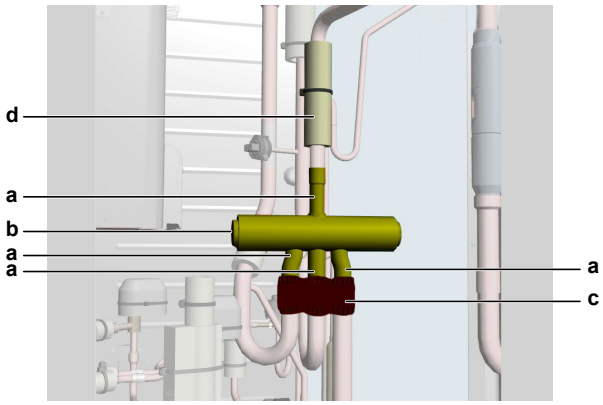

a 4-way valve pipe
b 4-way valve
c Putty
d Insulation

CAUTION

Overheating the valve will damage or destroy it.

6 After soldering is done, stop the nitrogen supply after the component has cooled-down.

7 Install the putty and the insulation in their original location.

8 Install the 4-way valve coil on the 4-way valve body, see "Repair procedures" [▶ 179].

9 Perform a pressure test, see "4.2.1 Checking procedures" [▶ 306].

10 Add refrigerant to the refrigerant circuit, see "4.2.2 Repair procedures" [▶ 311].

To install the 4-way valve coil

1 Install the 4-way valve coil on the 4-way valve body.

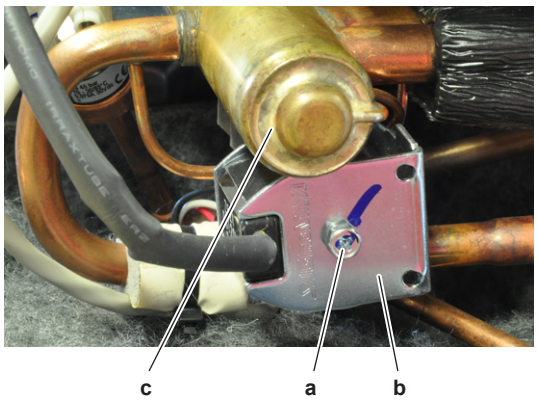

a Screw
b 4-way valve coil
c 4-way valve body

2 Install and tighten the screw to fix the 4-way valve coil.

3 Route the 4-way valve coil harness towards the appropriate PCB.

4 Connect the 4-way valve connector to the appropriate PCB.

WARNING

When reconnecting a connector to the PCB, make sure to connect it on the correct location and do NOT apply force, as this may damage the connector or connector pins of the PCB.

5 Fix the 4-way valve coil harness using new tie straps.

Is the problem solved?	Action
Yes	No further actions required.
No	Return to the troubleshooting of the specific error and continue with the next procedure.

3.2 Compressor

3.2.1 Checking procedures

> **INFORMATION**
> It is recommended to perform the checks in the listed order.

To perform an auditive check of the compressor

Prerequisite: First perform a power transistor check of the inverter PCB, see "3.8 Inverter PCB" [▶ 225]. If power transistor is OK, proceed as follows:

Prerequisite: Stop the unit operation via the central controller.

Prerequisite: Turn OFF the respective circuit breaker.

Prerequisite: Remove the required plate work, see "3.13 Plate work" [▶ 270].

1. Open the compressor insulation.
2. Turn ON the power using the respective circuit breaker.
3. Start the unit operation via the central controller.
4. Wait for - or create condition to operate the compressor.
5. Listen to the compressor when it tries to operate. Judge if a mechanical lock is present.

> **INFORMATION**
> If you have a multimeter with data logging functionality, record the current in 1 of the U-V-W wires at compressor start-up. If mechanical lock is present, logged current will drastically increase to a peak value and the unit will trigger an error.

> **INFORMATION**
> If a mechanical lock is present, also check and eliminate the root cause. Mechanical lock is most likely caused by lack of lubrication (which might be related to overheat or wet operation), failing crankcase heater (if available), impurities in the refrigerant, ...

A mechanical lock is present on the compressor?	Action
Yes	Replace the compressor, see "3.2.2 Repair procedures" [▶ 187].
No	Perform an mechanical check of the compressor, see "3.2.1 Checking procedures" [▶ 182].

To perform a mechanical check of the compressor

> **INFORMATION**
> For outdoor units ≥14 HP, the transportation stay for the compressor should be removed. Otherwise vibration is not absorbed, which can lead to pipe crack. See "3.2.2 Repair procedures" [▶ 187].

Prerequisite: First perform an auditive check of the compressor, see "3.2.1 Checking procedures" [▶ 182].

Prerequisite: Stop the unit operation via the central controller.

Prerequisite: Turn OFF the respective circuit breaker.

1 Wait until the rectifier voltage is below 10 V DC.

> **DANGER: RISK OF ELECTROCUTION**
>
> Confirm the rectifier voltage is below 10 V DC before proceeding, see "To prevent electrical hazards" [▶ 299].

2 Visually check:
   - For oil drops around the compressor. Locate and fix as needed.
   - Pipes for signs of damage. Replace pipes as needed.

3 Check that the compressor bolts are correctly fixed. Fix as needed.

4 Check that the compressor wire terminals cover is correctly installed and fixed. Correct as needed.

5 Check the compressor dampers for any damage.

a Damper

> **INFORMATION**
>
> The compressor dampers may look different.

Compressor dampers are in a good condition?	Action
Yes	Perform an electrical check of the compressor, see "3.2.1 Checking procedures" [▶ 182].
No	Replace the compressor and/or damaged dampers, see "3.2.2 Repair procedures" [▶ 187].

To perform an electrical check of the compressor

1 First perform a mechanical check of the compressor, see "3.2.1 Checking procedures" [▶ 182].

2 [Hz] = [rps] x (number of poles) / 2:

- For K-Type Compressor: [Hz] = 3 x [rps]
- For G-Type Compressor: [Hz] = 2 x [rps]

DANGER: RISK OF ELECTROCUTION

Confirm the rectifier voltage is below 10 V DC before proceeding, see "To prevent electrical hazards" [▶ 299].

3 Remove the cover of the compressor wire terminals.

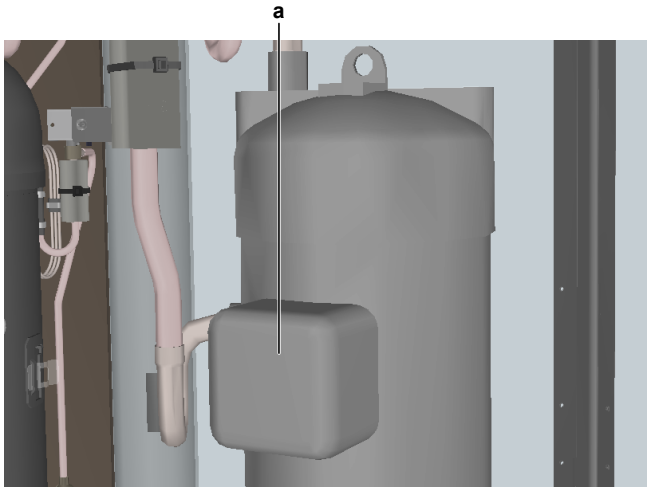

a Compressor wire terminals cover

4 Disconnect the Faston connectors from the compressor wire terminals U, V and W.

INFORMATION

Note the position of the Faston connectors on the compressor wire terminals to allow correct connection during installation.

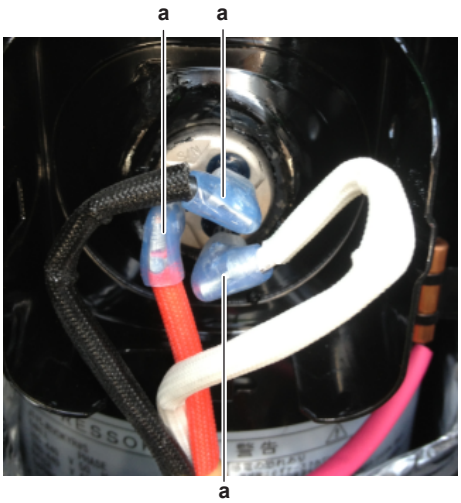

a Faston connector

CAUTION

Before measuring the compressor motor windings resistance, measure the resistance of the multimeter probes by holding the probes against each other. If the measured resistance is NOT 0 Ω, this value MUST be subtracted from the measured winding resistance.

5 Measure the resistance between the compressor motor windings U-V, V-W and U-W.

Result: All measurements MUST be approximately the same.

Unit	Compressor	Winding resistance value (at temperature of 20°C)
RYYQ8~12, RXYQ8~12, RYMQ8~12, RXYTQ8~12	M1C	0.26 Ω±5%
RYYQ14+16, RXYQ14+16, RYMQ14+16, RXYTQ14~16	M1C + M2C	0.77 Ω±5%
RYYQ18+20, RXYQ18+20, RYMQ18+20	M1C	0.77 Ω±5%
	M2C	0.26 Ω±5%

Compressor motor winding measurements are correct?	Action
Yes	Continue with the next step.
No	Replace the compressor, see "3.2.2 Repair procedures" [▶ 187].

6 Measure the continuity of the U, V and W wires between the compressor and the PCB. If no continuity, correct as needed, see "6.2 Wiring diagram" [▶ 325].

7 Connect the Faston connectors to the compressor wire terminals U, V and W

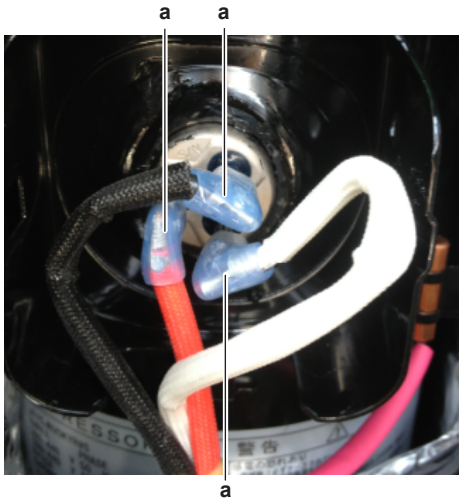

a Faston connector

8 Install the compressor wire terminals cover.

9 Install the compressor insulation.

10 Turn ON the power using the respective circuit breaker.

11 Start the unit operation via the central controller.

CAUTION

NEVER operate the compressor with the compressor wire terminals cover removed.

12 Wait for – or create condition to operate the compressor.

13 Once the compressor operates, measure the U-V-W inverter voltages. ALWAYS measure at the PCB side.

Result: All measurements MUST be the same.

Inverter voltage measurements are correct?	Action
Yes	Continue with the next step.
No	Perform a check of the appropriate PCB, see "3 Components" [▶ 169].

14 While compressor is operating, measure the current in each phase U, V and W. ALWAYS measure at the PCB side.

Result: All measurements MUST be the same.

Compressor motor winding current measurements are correct?	Action
Yes	Perform an insulation check of the compressor, see "3.2.1 Checking procedures" [▶ 182].
No	Preventively replace the compressor, see "3.2.2 Repair procedures" [▶ 187].

To perform an insulation check of the compressor

Prerequisite: First perform an electrical check of the compressor, see "3.2.1 Checking procedures" [▶ 182].

Prerequisite: Stop the unit operation via the central controller.

Prerequisite: Turn OFF the respective circuit breaker.

1 Wait until the rectifier voltage is below 10 V DC.

DANGER: RISK OF ELECTROCUTION

Confirm the rectifier voltage is below 10 V DC before proceeding, see "To prevent electrical hazards" [▶ 299].

2 Remove the cover of the compressor wire terminals.

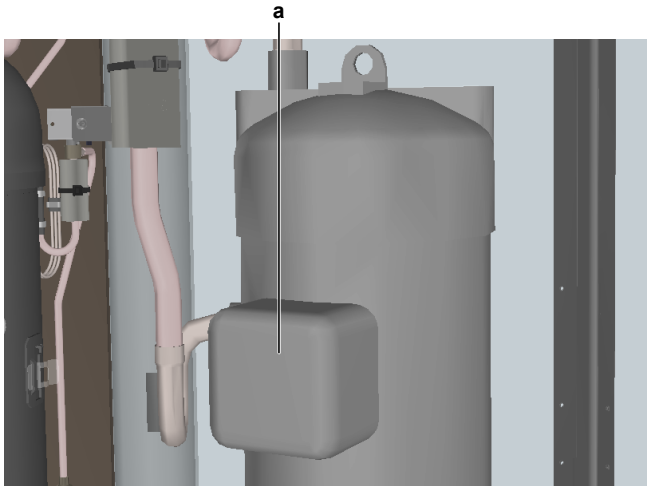

a Compressor wire terminals cover

3 Disconnect the Faston connectors from the compressor wire terminals U, V and W.

INFORMATION

Note the position of the Faston connectors on the compressor wire terminals to allow correct connection during installation.

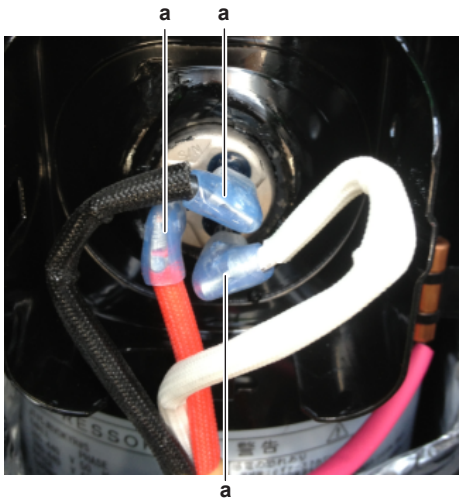

a Faston connector

4 Set the Megger voltage to 500 V DC or 1000 V DC.

5 Measure the insulation resistance between the following terminals. The measured insulation resistance MUST be >3 MΩ.

- U–ground,
- V–ground,
- W–ground.

Compressor insulation measurements are correct?	Action
Yes	Compressor is OK. Return to troubleshooting of the specific error and continue with the next procedure.
No	Replace the compressor, see "3.2.2 Repair procedures" [▶ 187].

3.2.2 Repair procedures

To remove the transportation stay

Only for 14~20 HP

NOTICE

If the unit is operated with the transportation stay attached, abnormal vibration or noise may be generated.

The transportation stay installed over the compressor leg for protecting the unit during transport must be removed. Proceed as shown in the figure and procedure below.

1 Slightly loosen the fixing nut.

2 Remove the transportation stay as shown in the figure below.

3 Tighten the fixing nut again.

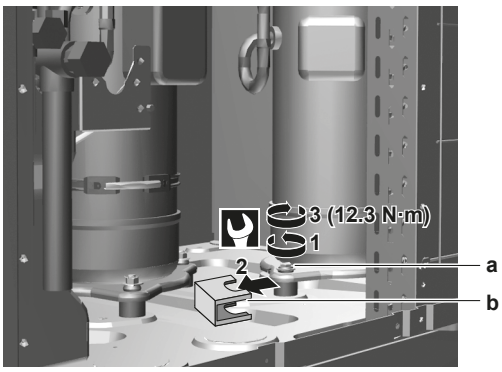

a Fixing nut
b Transportation stay

To remove the compressor

Prerequisite: Stop the unit operation via the central controller.

Prerequisite: Turn OFF the respective circuit breaker.

Prerequisite: Remove the required plate work, see "3.13 Plate work" [▶ 270].

Prerequisite: Remove the compressor insulation.

Prerequisite: Recuperate the refrigerant from the refrigerant circuit, see "4.2.2 Repair procedures" [▶ 311].

1 If needed, remove any parts to create more space for the removal of the compressor.

> **DANGER: RISK OF ELECTROCUTION**
>
> Confirm the rectifier voltage is below 10 V DC before proceeding, see "To prevent electrical hazards" [▶ 299].

2 Remove the cover of the compressor wire terminals.

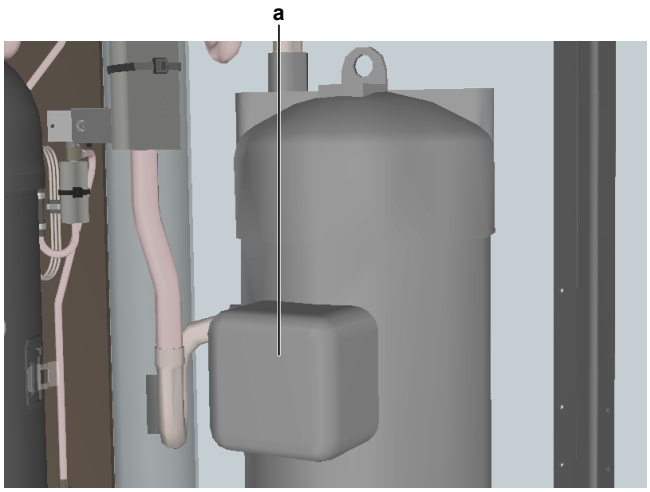

a Compressor wire terminals cover

3 Disconnect the Faston connectors from the compressor wire terminals U, V and W.

> **INFORMATION**
>
> Note the position of the Faston connectors on the compressor wire terminals to allow correct connection during installation.

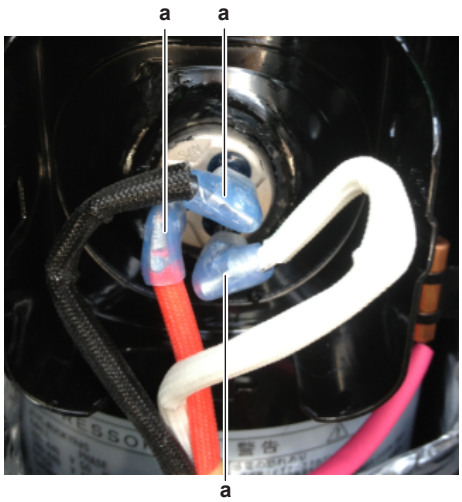

a Faston connector

4 Cut the tie strap and remove the compressor wiring from the compressor body.

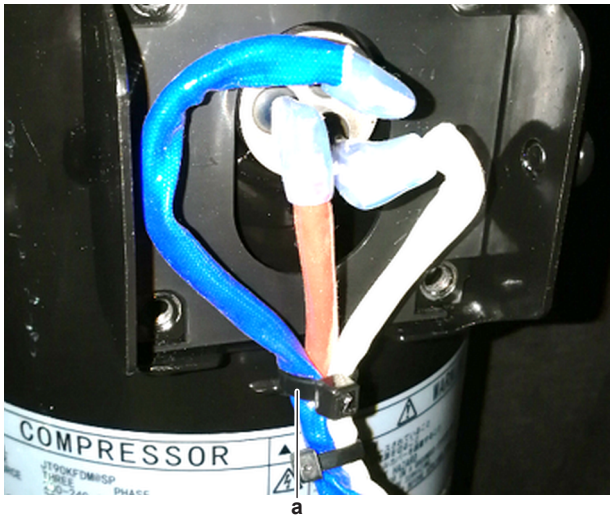

a Tie strap

5 Remove the crankcase heater, see "To remove the crankcase heater" [▸ 197].

6 Supply nitrogen to the refrigerant circuit. The nitrogen pressure MUST NOT exceed 0.02 MPa.

7 Wrap a wet rag around the components near the compressor pipes. Heat the brazing points of the compressor pipes using an oxygen acetylene torch and remove the refrigerant pipes from the compressor pipes using pliers.

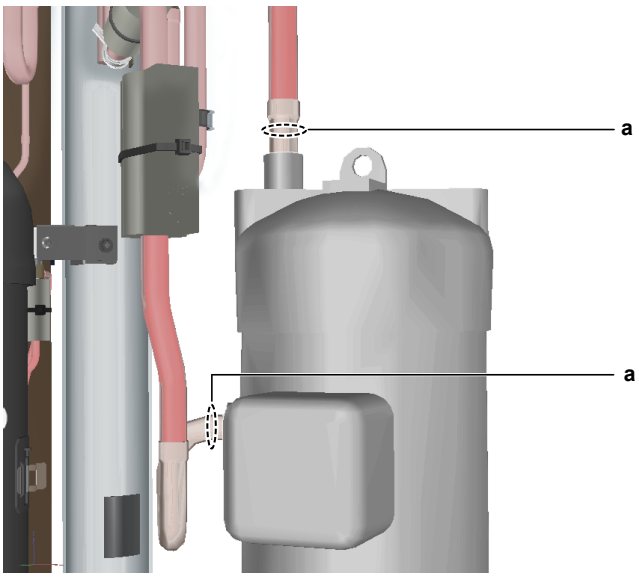

a Compressor pipe

8 Stop the nitrogen supply when the piping has cooled down.

> **INFORMATION**
>
> It is ALSO possible to cut the component pipe(s) using a pipe cutter. Make sure to remove the remaining component pipe end(s) from the refrigerant pipes by heating the brazing point(s) of the component pipe(s) using an oxygen acetylene torch.

9 Remove the nuts and bolts and remove the compressor from the unit.

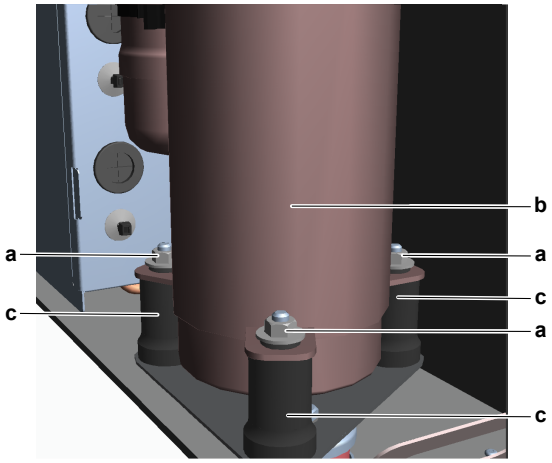

a Nut
b Compressor
c Damper

10 Remove the 3 dampers from the compressor.

> **INFORMATION**
>
> The compressor dampers may look different.

11 Remove the bushings and keep them for re-use.

12 Install plugs or caps on the open pipe ends of the refrigerant piping to avoid dirt or impurities from entering the piping.

13 To install the compressor, see "3.2.2 Repair procedures" [▶ 187].

To install the compressor

1. Check the state of the dampers. Replace if worn.
2. Install the 3 dampers in the correct location on the unit.
3. Remove the plugs or caps from the refrigerant piping and make sure they are clean.
4. Remove the caps from the compressor pipes (of the new compressor).

> **CAUTION**
> The oil in the compressor is hygroscopic. Therefore remove the caps from the compressor pipes as late as possible.

5. Install the compressor on the correct location on the dampers. Properly insert the refrigerant pipes in the pipe expansions of the compressor pipes.
6. Install and tighten the bolts and nuts to fix the compressor to the dampers.

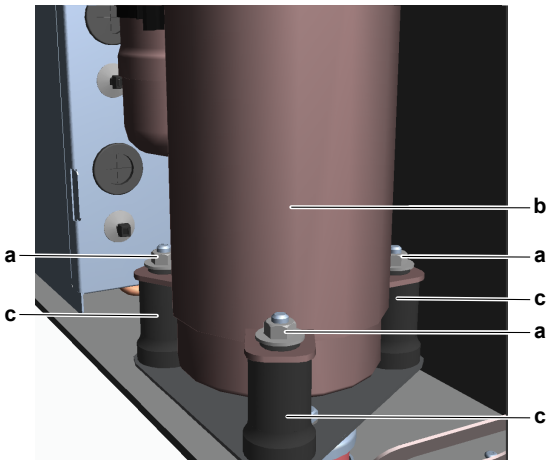

a Nut
b Compressor
c Damper

> **INFORMATION**
> The compressor dampers may look different.

7. Supply nitrogen to the refrigerant circuit. The nitrogen pressure MUST NOT exceed 0.02 MPa.
8. Wrap a wet rag around the compressor pipes and any other components near the compressor and solder the compressor pipes to the refrigerant pipes.

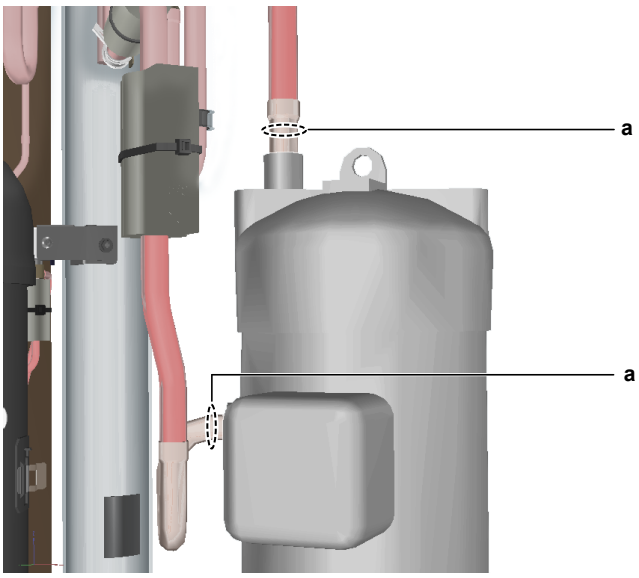

a Compressor pipe

> **CAUTION**
>
> Overheating the compressor pipes (and the oil inside the compressor pipes) will damage or destroy the compressor.

9 After soldering is done, stop the nitrogen supply after the component has cooled-down.

10 Connect the Faston connectors to the compressor wire terminals U, V and W

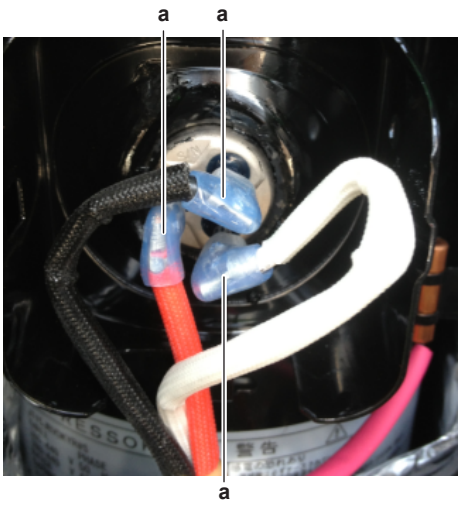

a Faston connector

11 Fix the compressor wiring to the protrusion on the compressor body using a new tie strap.

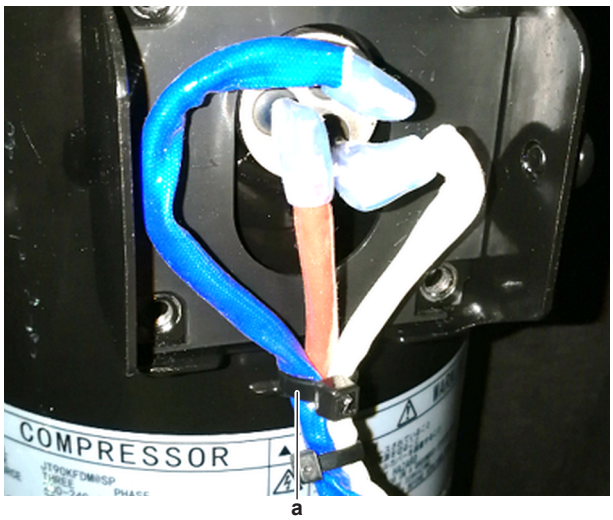

a Tie strap

12 Install the cover of the compressor wire terminals.

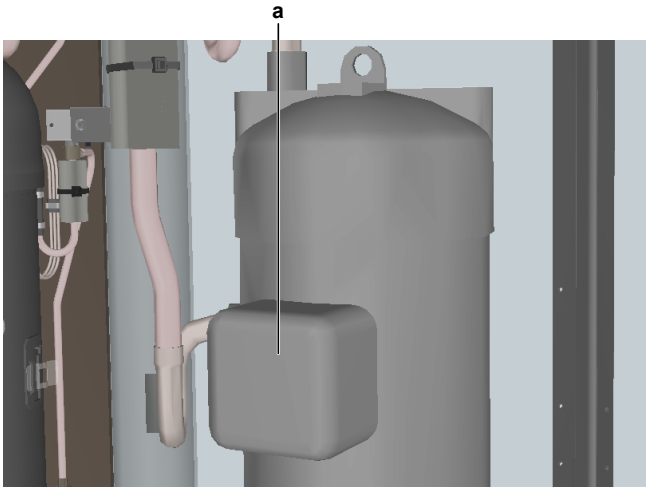

a Compressor wire terminals cover

Install the crankcase heater, see "To install the crankcase heater" [▶ 198]

13 Install the compressor insulation, see "3.2.2 Repair procedures" [▶ 187].

14 Perform a pressure test, see "4.2.1 Checking procedures" [▶ 306].

15 Add refrigerant to the refrigerant circuit, see "4.2.2 Repair procedures" [▶ 311].

Is the problem solved?	Action
Yes	No further actions required.
No	Return to the troubleshooting of the specific error and continue with the next procedure.

To remove the compressor insulation

Prerequisite: Stop the unit operation via the central controller.

Prerequisite: Turn OFF the respective circuit breaker.

Prerequisite: Remove the required plate work, see "3.13 Plate work" [▶ 270].

1 Detach all the strips.

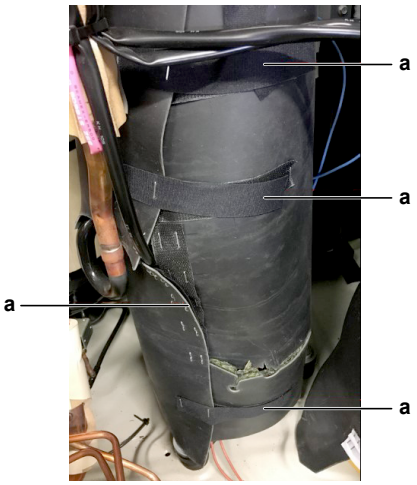

a Strip

2 Detach the strip of the top jacket.

3 Remove the top jacket.

4 Remove the body jacket from the compressor.

b Strip
c Top jacket
d Body jacket
e Compressor

5 To install the compressor insulation, see "3.2.2 Repair procedures" [▶ 187].

To install the compressor insulation

b Strip
c Top jacket
d Body jacket
e Compressor

1 Install the body jacket on the compressor.

2 Install the top jacket.

3 Attach the strip to the top jacket.

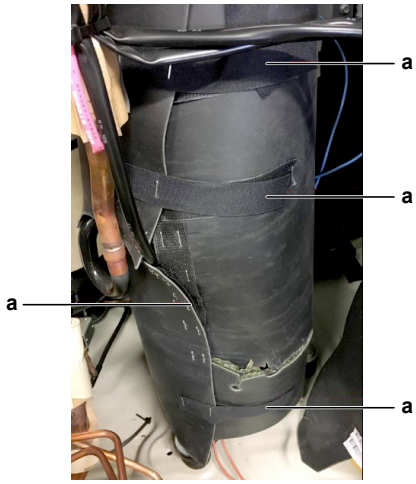

a Strip

4 Attach all the strips.

3.3 Crankcase heater

3.3.1 Checking procedures

INFORMATION

It is recommended to perform the checks in the listed order.

To perform an electrical check of the crankcase heater

Prerequisite: Stop the unit operation via the central controller.

Prerequisite: Turn OFF the respective circuit breaker.

1 Remove the required plate work, see "3.13 Plate work" [▶ 270].

DANGER: RISK OF ELECTROCUTION

Confirm the rectifier voltage is below 10 V DC before proceeding, see "To prevent electrical hazards" [▶ 299].

2 Open the compressor insulation.

3 Detach the spring that fixes the crankcase heater on the compressor.

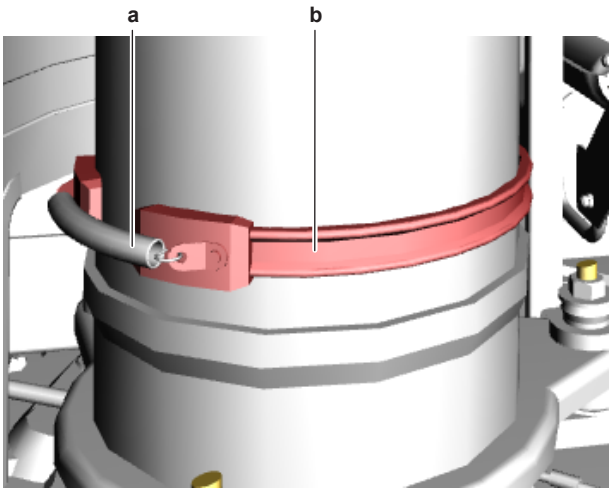

a Spring
b Crankcase heater

4 Remove the crankcase heater from the compressor and wait for 5 minutes (until the heater element reaches ambient temperature).

5 Disconnect the crankcase heater connector from the appropriate PCB.

6 Measure the resistance on the crankcase heater connector.

Result: The resistance MUST be 1.8 kΩ±10%.

Is the measured resistance correct?	Action
Yes	Continue with the next step.
No	Replace the crankcase heater, see "3.3.2 Repair procedures" [▶ 197].

CAUTION

If the crankcase heater is found short-circuit, do NOT connect its connector to the PCB. When the crankcase heater gets energized, it will damage the PCB.

7 Connect the crankcase heater connector to the appropriate PCB and install the crankcase heater on the compressor.

8 Turn ON the power using the respective circuit breaker.

9 Start the unit operation via the central controller.

INFORMATION

Verify that the read-out of the outdoor air thermistor, discharge thermistor and compressor body thermistor (if available) is correct.

- Measure the outdoor temperature. Use a contact thermometer to measure the other thermistor temperatures.
- Compare with the read-out via the service monitoring tool or field settings.

10 With the crankcase heater energised (compressor OFF and discharge temperature <70°C), measure the voltage on the crankcase heater connector on the PCB.

Result: The measured voltage MUST be 230 V AC.

INFORMATION

The compressor body temperature MUST raise at least 5°C before the crankcase heater is deactivated.

Is the measured voltage correct?	Action
Yes	Perform an insulation check of the crankcase heater, see "3.3.1 Checking procedures" [▶ 195].
No	Perform a check of the main PCB, see "3.9 Main PCB" [▶ 243].

To perform an insulation check of the crankcase heater

Prerequisite: First perform an electrical check of the crankcase heater, see "3.3.1 Checking procedures" [▶ 195].

Prerequisite: Stop the unit operation via the central controller.

Prerequisite: Turn OFF the respective circuit breaker.

1 Wait until the rectifier voltage is below 10 V DC.

DANGER: RISK OF ELECTROCUTION

Confirm the rectifier voltage is below 10 V DC before proceeding, see "To prevent electrical hazards" [▶ 299].

2 Disconnect the crankcase heater connector from the appropriate PCB.

3 Set the Megger voltage to at least 500 V DC.

4 Connect the Megger ground test lead directly to the crankcase heater ground wire.

CAUTION

Do NOT connect the Megger ground test lead to any other ground wire.

5 Measure the insulation resistance between the phase and ground wire. The measured insulation resistance MUST be >1 MΩ.

Is the measured insulation resistance correct?	Action
Yes	Return to the troubleshooting of the specific error and continue with the next procedure.
No	Replace the crankcase heater, see "3.3.2 Repair procedures" [▶ 197].

3.3.2 Repair procedures

To remove the crankcase heater

Prerequisite: Stop the unit operation via the central controller.

Prerequisite: Turn OFF the respective circuit breaker.

1 Remove the required plate work, see "3.13 Plate work" [▶ 270].

DANGER: RISK OF ELECTROCUTION

Confirm the rectifier voltage is below 10 V DC before proceeding, see "To prevent electrical hazards" [▶ 299].

2 Open the compressor insulation.

3 Detach the spring that fixes the crankcase heater on the compressor.

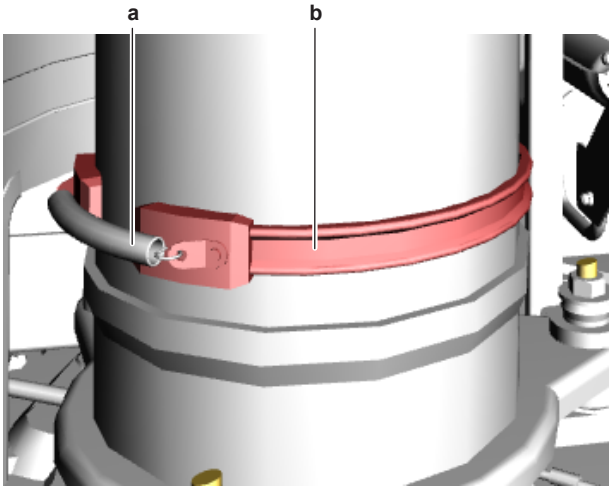

a Spring
b Crankcase heater

4 Cut all tie straps that fix the crankcase heater harness.

5 Disconnect the crankcase heater connector from the appropriate PCB.

6 To install the crankcase heater, see "3.3.2 Repair procedures" [▶ 197].

To install the crankcase heater

1 Install the crankcase heater on the compressor.

2 Attach the spring to fix the crankcase heater.

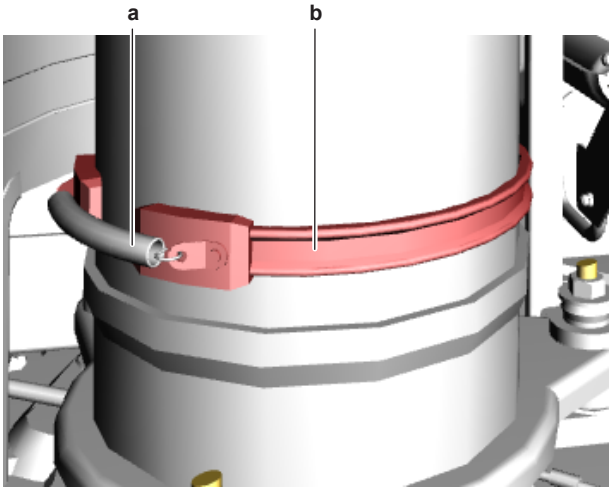

a Spring
b Crankcase heater

3 Route the crankcase heater harness towards the switch box.

4 Connect the crankcase heater connector to the appropriate PCB and install the crankcase heater on the compressor.

WARNING

When reconnecting a connector to the PCB, make sure to connect it on the correct location and do NOT apply force, as this may damage the connector or connector pins of the PCB.

5 Fix the crankcase heater harness using new tie straps.

INFORMATION

Replace all cable ties that were cut during removal.

Is the problem solved?	Action
Yes	No further actions required.
No	Return to the troubleshooting of the specific error and continue with the next procedure.

3.4 Current sensor

3.4.1 Checking procedures

To perform an electrical check of the current sensor

Prerequisite: Stop the unit operation via the central controller.

Prerequisite: Turn OFF the respective circuit breaker.

1 Remove the required plate work, see "3.13 Plate work" [▶ 270].

> **DANGER: RISK OF ELECTROCUTION**
>
> Confirm the rectifier voltage is below 10 V DC before proceeding, see "To prevent electrical hazards" [▶ 299].

2 Visually check the current sensor for any damage or burnt-out components. If any damage is found, replace the current sensor, see "3.4.2 Repair procedures" [▶ 200].

3 Locate the current sensor connector on the main PCB, see "6.2 Wiring diagram" [▶ 325].

4 Check that pins 1 and 4 on connector X101A are bridged.

Result: If the pins are NOT bridged, install the bridge.

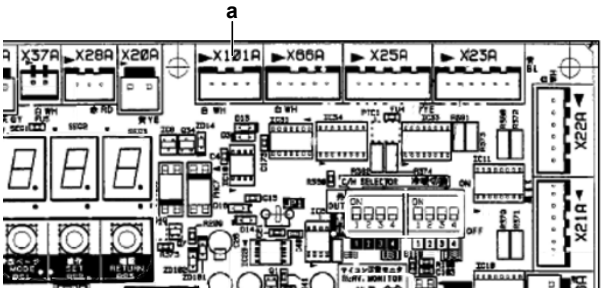

a Connector X101A

5 Check the wiring from pins 2 and 3 of connector X101A to the current sensor.

6 Disconnect the current sensor connector from the connector X101A on the main PCB and measure the resistance between pins 2 and 3 of the current sensor connector.

Result: The measured value MUST be 45~50 Ω.

7 Set the Megger voltage to at least 500 V DC.

8 Measure the insulation resistance between the phase and ground.

Result: The measured insulation resistance MUST be >1000 MΩ.

Are the measurements correct?	Action
Yes	Return to the troubleshooting of the specific error and continue with the next procedure.
No	Replace the current sensor, see "3.4.2 Repair procedures" [▶ 200].

3.4.2 Repair procedures

To remove the current sensor

Prerequisite: Stop the unit operation via the central controller.

Prerequisite: Turn OFF the respective circuit breaker.

1 Remove the required plate work, see "3.13 Plate work" [▶ 270].

> **DANGER: RISK OF ELECTROCUTION**
>
> Confirm the rectifier voltage is below 10 V DC before proceeding, see "To prevent electrical hazards" [▶ 299].

2 Disconnect the current sensor connector from the main PCB.

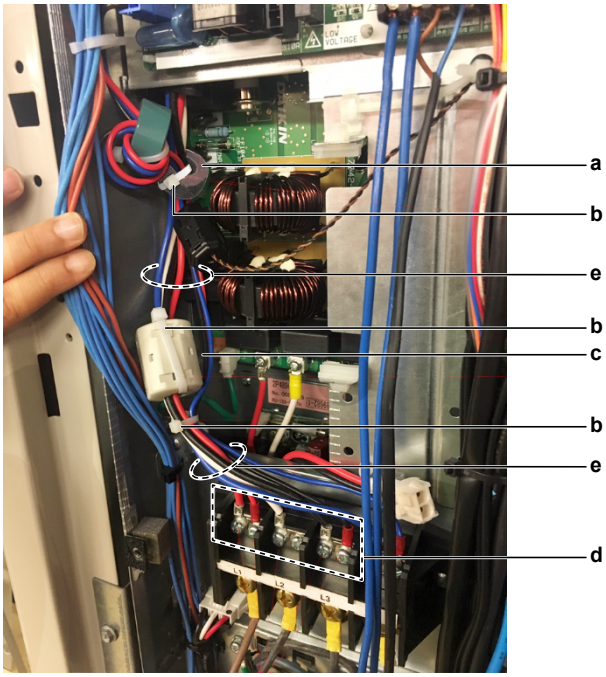

- **a** Current sensor
- **b** Tie wrap
- **c** Ferrite core
- **d** Screw connections
- **e** Power wiring

3 Remove the necessary tie wraps from the wiring of the current sensor and the power wiring.

4 Remove the ferrite core.

5 Loosen the screw connections to disconnect the power wiring.

6 Slide the current sensor on the power wiring and remove the current sensor.

7 To install the current sensor, see "3.4.2 Repair procedures" [▶ 200].

To install the current sensor

1. Slide the current sensor on the power wiring and install the current sensor in place.
2. Install the power wiring in the connections and fasten the screws.
3. Install the ferrite core.
4. Connect the current sensor connector.
5. Install new tie wraps on the wiring of the current sensor and on the power wiring.

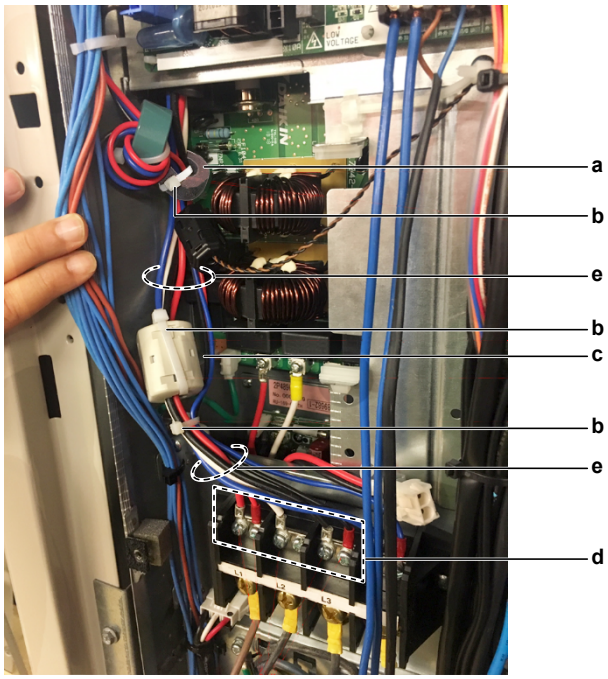

a Current sensor
b Tie wrap
c Ferrite core
d Screw connections
e Power wiring

Is the problem solved?	Action
Yes	No further actions required.
No	Return to the troubleshooting of the specific error and continue with the next procedure.

3.5 Expansion valve

3.5.1 Checking procedures

INFORMATION

It is recommended to perform the checks in the listed order.

To perform a mechanical check of the expansion valve

Prerequisite: Power OFF the unit for 3 minutes. Then turn ON the unit and listen to the expansion valve assembly. If the expansion valve does NOT make a latching sound, continue with the electrical check of the expansion valve, see "3.5.1 Checking procedures" [▸ 201].

Prerequisite: Stop the unit operation via the central controller.

Prerequisite: Turn OFF the respective circuit breaker.

Prerequisite: Remove the required plate work, see "3.13 Plate work" [▸ 270].

1. Remove the expansion valve insulation (if applicable) and visually check:
   - For oil drops around the expansion valve. Locate and fix as necessary.
   - Pipes for signs of damage. Replace pipes as needed.
   - Coil wires for signs of damage. Replace expansion valve coil as needed. See "3.5.2 Repair procedures" [▸ 206].
2. Remove the expansion valve coil from the expansion valve body, see "3.5.2 Repair procedures" [▸ 206].
3. Slide the expansion valve magnet over the expansion valve body and gently rotate the magnet clockwise/counterclockwise to manually close/open the expansion valve. Listen to check if the valve is closing/opening and manually close the valve when check is done.

> **INFORMATION**
> After the check, remove the magnet from the expansion valve body and install the expansion valve coil on the expansion valve body. Make sure that the expansion valve coil is firmly slid onto the expansion valve body.

> **INFORMATION**
> It is highly recommended to perform a power reset after checking the valve using a magnet.

Does the expansion valve open?	Action
Yes	Perform an electrical check of the expansion valve, see "3.5.1 Checking procedures" [▸ 201].
No	Replace the expansion valve body, see "3.5.2 Repair procedures" [▸ 206].

To perform an electrical check of the expansion valve

1. First perform a mechanical check of the expansion valve, see "3.5.1 Checking procedures" [▸ 201].
2. Disconnect the electrical connector of the expansion valve coil from the appropriate PCB and measure the resistance of all windings (between the pins of each phase (wire) and the common wire) using a multi meter. All measurements MUST be approximately the same.

Name	Symbol	Location (PCB)	Connector	Winding resistance
Main expansion valve	Y1E	Main	X21A	150±15 Ω

Name	Symbol	Location (PCB)	Connector	Winding resistance
Sub-cool expansion valve	Y2E	Main	X22A	46±3 Ω
Liquid cooling expansion valve	Y3E	Main	X23A	46±3 Ω
Storage vessel expansion valve	Y4E	Main	X25A	150±15 Ω

INFORMATION

Below are shown examples of the resistance measurements in which the common wire is connected to pin 5 or to pin 6 of the expansion valve coil connector. Connections may differ according to the type of expansion valve.

- Connector pin 1-5,
- Connector pin 2-5,
- Connector pin 3-5,
- Connector pin 4-5.

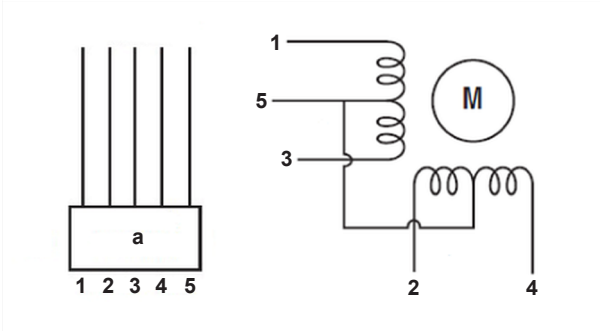

a Connector

- Connector pin 1-6,
- Connector pin 2-6,
- Connector pin 3-6,
- Connector pin 4-6.

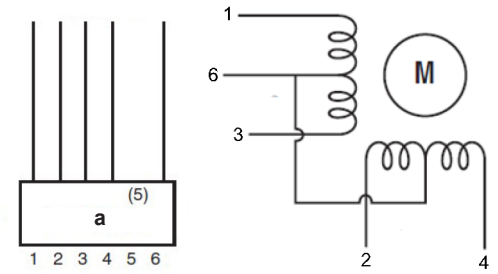

a Connector

3 Check the insulation resistance of the coil by measuring the resistance between the pins of each phase (1, 2, 3, 4) and GND on the unit.

Result: None of the measurements should be short-circuit.

WARNING

When reconnecting a connector to the PCB, make sure to connect it on the correct location and do NOT apply force, as this may damage the connector or connector pins of the PCB.

Is the measured resistance correct?	Action
Yes	Perform an operation check of the expansion valve, see "3.5.1 Checking procedures" [▶ 201].
No	Replace the expansion valve coil, "3.5.2 Repair procedures" [▶ 206].

To perform an operation check of the expansion valve

Prerequisite: First perform an electrical check of the expansion valve, see "3.5.1 Checking procedures" [▶ 201].

1 Turn ON the power of the unit.

INFORMATION

When power is switched ON, PCB checks all expansion valve coil windings by current check. If winding is short or open, expansion valve error is triggered.

2 Start the unit operation via the central controller.

3 With the unit operating, connect the service monitoring tool to the unit.

4 When the expansion valve is closed according to the service monitoring tool, check the inlet and outlet of the valve with a contact thermometer or use an expansion valve stethoscope to see if refrigerant flows through the expansion valve. Check that the valve is NOT bleeding.

Result: There MUST be NO flow through the expansion valve.

5 When the expansion valve is open according to the service monitoring tool, check the inlet and outlet of the valve with a contact thermometer or use an expansion valve stethoscope to see if refrigerant flows through the expansion valve.

Result: Refrigerant MUST flow through the expansion valve.

6 Wait for the PCB to command the expansion valve to open (when closed) or to close (when open) (pulse output to expansion valve visible on service monitoring tool).

INFORMATION

If the PCB does NOT command the expansion valve to open or close (when it is supposed to), perform a check of the appropriate thermistors and pressure sensors (as their measurements control the operation of the expansion valve(s)).

7 While in opening or closing sequence each expansion valve winding (Φ1, 2, 3, 4) is supplied with 12 V DC from the PCB. You will need a good multimeter, where its range is set to about 20 V DC, and during opening or closing sequence you may be able to measure the supply voltage for a short time. If you set the multimeter range to Auto, then most likely you may NOT read a value between switching ranges. The best way to check is to feel the movement of the valve by touching, rather than trying to measure the driving voltage.

- Opening sequence for Y1E and Y4E:
  Valve closing: 1 > 2 > 3 > 4 > 1
  Valve opening: 4 > 3 > 2 > 1 > 4

Phase	Energizing status			
	1	2	3	4
Φ1	ON	OFF	OFF	ON
Φ2	ON	ON	OFF	OFF
Φ3	OFF	ON	ON	OFF
Φ4	OFF	OFF	ON	ON

- Opening sequence for Y2E and Y3E:
  Valve closing: 8 > 7 > 6 > 5 > 4 > 3 > 2 > 1
  Valve opening: 1 > 2 > 3 > 4 > 5 > 6 > 7 > 8

Phase	Energizing status							
	1	2	3	4	5	6	7	8
Φ1	ON	ON	OFF	OFF	OFF	OFF	OFF	ON
Φ2	OFF	ON	ON	ON	OFF	OFF	OFF	OFF
Φ3	OFF	OFF	OFF	ON	ON	ON	OFF	OFF
Φ4	OFF	OFF	OFF	OFF	OFF	ON	ON	ON

8 When the expansion valve was commanded to close, check the inlet and outlet of the valve with a contact thermometer or use an expansion valve stethoscope to see if refrigerant flows through the expansion valve. Check that the valve is NOT bleeding.

Result: There MUST be NO flow through the expansion valve.

9 When the expansion valve was commanded to open, check the inlet and outlet of the valve with a contact thermometer or use an expansion valve stethoscope to see if refrigerant flows through the expansion valve.

Result: Refrigerant MUST flow through the expansion valve.

Is the flow through the expansion valve correct?	Action
Yes	Component is OK. Return to the troubleshooting of the specific error and continue with the next step.
No	Replace the expansion valve, see "3.5.2 Repair procedures" [▶ 206].

Problem solved?

After all checking procedures listed above have been performed:

Is the problem solved?	Action
Yes	No further actions required.
No	Return to the troubleshooting of the specific error and continue with the next procedure.

3.5.2 Repair procedures

To remove the expansion valve coil

Prerequisite: Stop the unit operation via the central controller.

Prerequisite: Turn OFF the respective circuit breaker.

Prerequisite: Remove the required plate work, see "3.13 Plate work" [▶ 270].

1. If needed, remove any parts or insulation to create more space for the removal.
2. Cut the tie strap and remove the insulation cap.

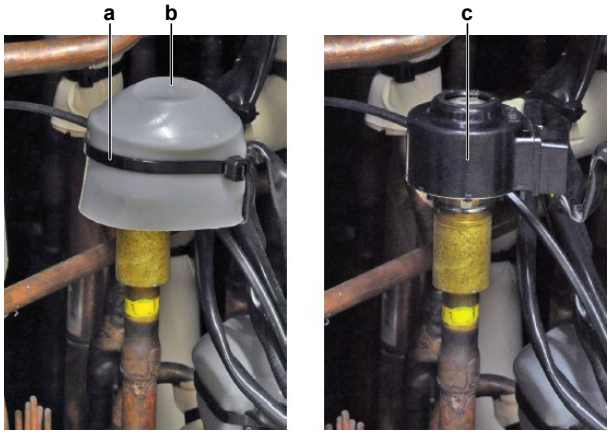

a Tie strap
b Expansion valve cover
c Expansion valve coil

3. Pull the expansion valve coil to remove it from the expansion valve body.

> **INFORMATION**
> It may be needed to turn the expansion valve coil 1/8 turn counter clockwise to unlock it. Make sure to note the correct orientation (position) of the expansion valve coil before removal.

4. Cut all tie straps that fix the expansion valve coil harness.
5. Disconnect the expansion valve coil connector from the appropriate PCB. See "To perform an electrical check of the expansion valve" [▶ 202] for an overview oft he expansion valve connectors and their locations.
6. To install the expansion valve coil, see "3.5.2 Repair procedures" [▶ 206].

To remove the expansion valve body

Prerequisite: Recuperate the refrigerant from the refrigerant circuit, see "4.2.2 Repair procedures" [▶ 311].

Prerequisite: If needed, remove any parts or insulation to create more space for the removal.

1. Remove the expansion valve coil, see "3.5.2 Repair procedures" [▶ 206].
2. Using a valve magnet, open the expansion valve.
3. Supply nitrogen to the refrigerant circuit. The nitrogen pressure MUST NOT exceed 0.02 MPa.
4. Wrap a wet rag around the components near the expansion valve pipes. Heat the brazing points of the expansion valve pipes using an oxygen acetylene torch and remove the expansion valve pipes from the refrigerant pipes using pliers.

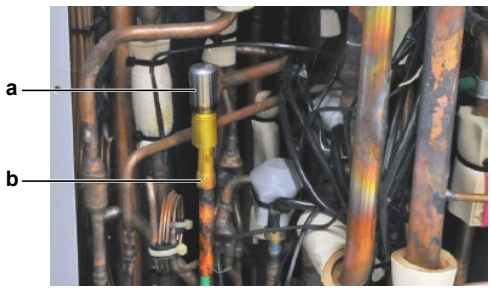

a Expansion valve body
b Expansion valve pipe

> **INFORMATION**
> The expansion valve and coil can have a different configuration / layout.

5 Stop the nitrogen supply when the piping has cooled down.

6 Remove the expansion valve body.

> **INFORMATION**
> It is ALSO possible to cut the component pipe(s) using a pipe cutter. Make sure to remove the remaining component pipe end(s) from the refrigerant pipes by heating the brazing point(s) of the component pipe(s) using an oxygen acetylene torch.

7 Install plugs or caps on the open pipe ends of the refrigerant piping to avoid dirt or impurities from entering the piping.

8 To install the expansion valve body, see "3.5.2 Repair procedures" [▶ 206].

To install the expansion valve body

1 Remove the plugs or caps from the refrigerant piping and make sure they are clean.

2 Remove the expansion valve coil from the spare part expansion valve body.

3 Install the expansion valve body in the correct location and correctly oriented. Insert the pipe ends in the pipe expansions.

4 Open the expansion valve using a valve magnet.

5 Supply nitrogen to the refrigerant circuit. The nitrogen pressure MUST NOT exceed 0.02 MPa.

6 Wrap a wet rag around the expansion valve body and any other components near the expansion valve and solder the expansion valve pipes to the refrigerant pipes.

> **CAUTION**
> Overheating the valve will damage or destroy it.

7 After soldering is done, stop the nitrogen supply after the component has cooled-down.

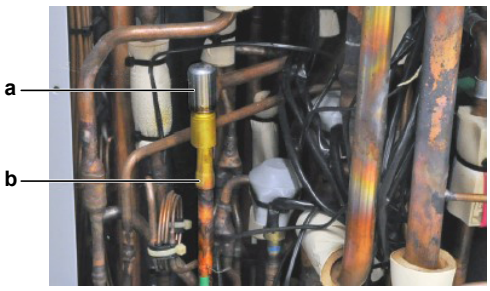

a Expansion valve body
b Expansion valve pipe

8 To install the expansion valve coil, see "3.5.2 Repair procedures" [▶ 206].

9 Perform a pressure test, see "4.2.1 Checking procedures" [▶ 306].

10 Add refrigerant to the refrigerant circuit, see "4.2.2 Repair procedures" [▶ 311].

To install the expansion valve coil

1 Install the expansion valve coil on the expansion valve body.

> **INFORMATION**
> Turn the expansion valve coil 1/8 turn clockwise to lock it on the expansion valve body.

> **INFORMATION**
> The correct alignment of the expansion valve coil is ensured by dimples.

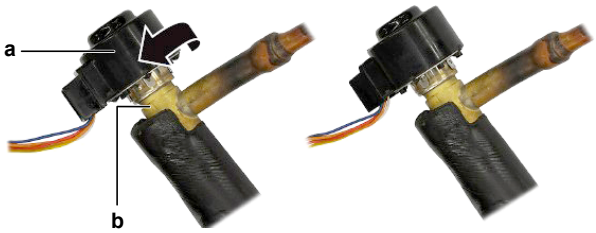

a Expansion valve coil
b Pipe

2 Route the expansion valve coil harness towards the appropriate PCB.

3 Connect the expansion valve coil connector to the appropriate PCB.

> **WARNING**
> When reconnecting a connector to the PCB, make sure to connect it on the correct location and do NOT apply force, as this may damage the connector or connector pins of the PCB.

4 Fix the expansion valve coil harness using new tie straps.

5 Install the insulation cap on the expansion valve coil (if applicable).

Is the problem solved?	Action
Yes	No further actions required.
No	Return to "3.5.1 Checking procedures" [▶ 201] of the expansion valve and continue with the next procedure.

To install the expansion valve coil with clip

1 Install the expansion valve coil on the expansion valve body.

> **INFORMATION**
> The expansion valve coil is equipped with a pipe retention clip. Install the pipe retention clip over the pipe to lock the expansion valve coil.

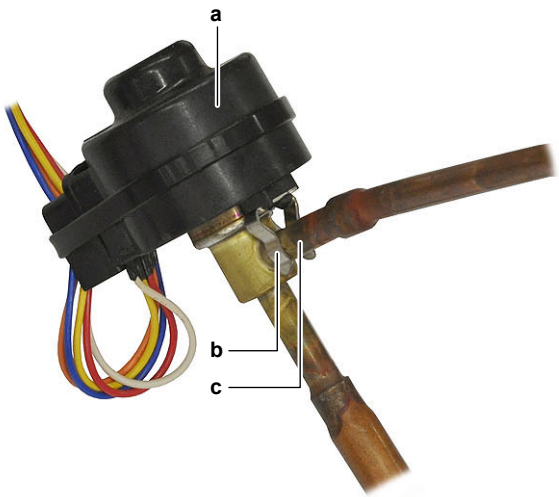

a Expansion valve coil
b Pipe retention clip
c Pipe

2 Route the expansion valve coil harness towards the appropriate PCB.

3 Connect the expansion valve coil connector to the appropriate PCB.

> **WARNING**
> When reconnecting a connector to the PCB, make sure to connect it on the correct location and do NOT apply force, as this may damage the connector or connector pins of the PCB.

4 Fix the expansion valve coil harness using new tie straps.

5 Install the insulation cap on the expansion valve coil (if applicable).

Is the problem solved?	Action
Yes	No further actions required.
No	Return to "3.5.1 Checking procedures" [▸ 201] of the expansion valve and continue with the next procedure.

To install the expansion valve coil with bracket

1 Install the expansion valve coil on the expansion valve body.

> **INFORMATION**
> The expansion valve coil is equipped with a metal bracket. Fit the nipples of the metal bracket into the notches of the expansion valve body.

CAUTION

Make sure to install the expansion valve coil in the correct position (orientation).

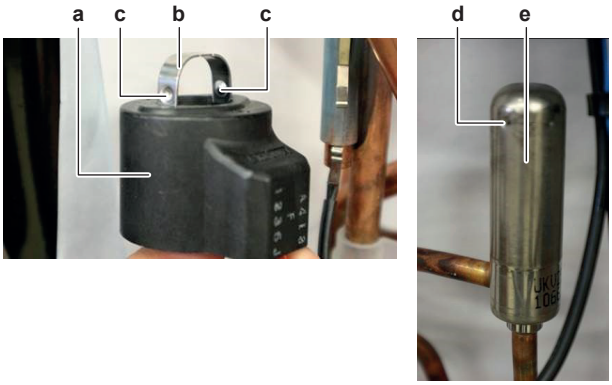

- **a** Expansion valve coil
- **b** Metal bracket
- **c** Nipple
- **d** Notch
- **e** Expansion valve body

2. Route the expansion valve coil harness towards the appropriate PCB.
3. Connect the expansion valve coil connector to the appropriate PCB.

WARNING

When reconnecting a connector to the PCB, make sure to connect it on the correct location and do NOT apply force, as this may damage the connector or connector pins of the PCB.

4. Fix the expansion valve coil harness using new tie straps.
5. Install the insulation cap on the expansion valve coil (if applicable).

Is the problem solved?	Action
Yes	No further actions required.
No	Return to "3.5.1 Checking procedures" [▸ 201] of the expansion valve and continue with the next procedure.

3.6 Fan inverter PCB

3.6.1 Single fan outdoor unit

Checking procedures

INFORMATION

It is recommended to perform the checks in the listed order.

To perform a power check of the fan inverter PCB

Prerequisite: Stop the unit operation via the central controller.

Prerequisite: Turn OFF the respective circuit breaker.

Prerequisite: Remove the required plate work, see "3.13 Plate work" [▸ 270].

Prerequisite: Access the switch box, see "3.13 Plate work" [▶ 270].

1 Turn ON the power of the unit.

2 Measure the voltage between pins 1 and 3 of connector X5A The measured voltage MUST be 18 V DC.

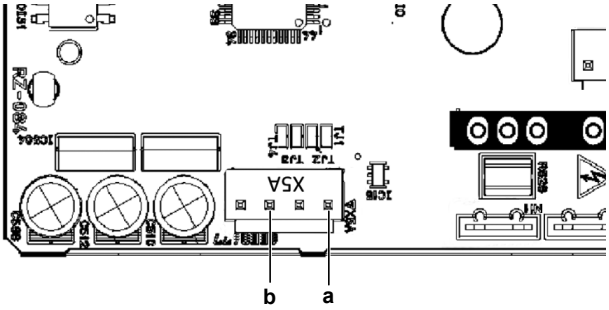

a Pin 1
b Pin 3

Is the measured voltage on the PCB correct?	Action
Yes	Return to "Checking procedures" [▶ 210] of the PCB and continue with the next procedure.
No	Continue with the next step.

3 Measure the output voltage voltage on connector X601A on the inverter PCB.

Result: The measured voltage MUST be 18 V DC.

Is the measured output voltage on the inverter PCB correct?	Action
Yes	Correct the wiring between the fan inverter PCB and the inverter PCB, see "4.1.2 Repair procedures" [▶ 304].
No	Perform a check of the inverter PCB, see "3.8.1 Checking procedures" [▶ 225].

To check the HAP LED of the fan inverter PCB

1 First perform a power check of the fan inverter PCB, see "Checking procedures" [▶ 210].

2 Locate the HAP LED on the fan inverter PCB.

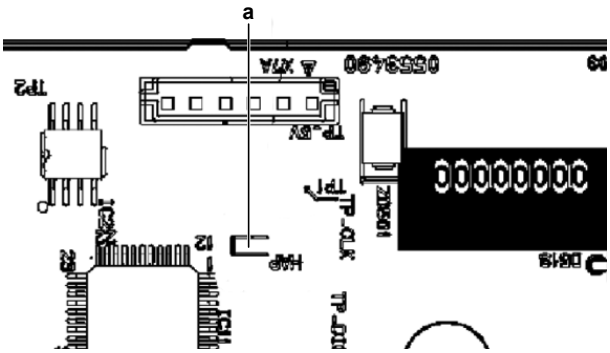

a HAP LED

Does the HAP LED blink in regular intervals (approximately 1 Hz)?	Action
Yes	Return to "Checking procedures" [▸ 210] of the fan inverter PCB and continue with the next procedure.
No	Replace the fan inverter PCB, see "Repair procedures" [▸ 214].

To check if the correct spare part is installed

Prerequisite: First perform all earlier checks of the fan inverter PCB, see "Checking procedures" [▸ 210].

1 Visit your local spare parts webbank.

2 Enter the model name of your unit and check if the installed spare part number corresponds with the spare part number indicated in the webbank.

Is the correct spare part for the fan inverter PCB installed?	Action
Yes	Return to "Checking procedures" [▸ 210] of the fan inverter PCB and continue with the next procedure.
No	Replace the fan inverter PCB, see "Repair procedures" [▸ 214].

To check the wiring of the fan inverter PCB

Prerequisite: First perform all earlier checks of the fan inverter PCB, see "Checking procedures" [▸ 210].

Prerequisite: Stop the unit operation via the central controller.

Prerequisite: Turn OFF the respective circuit breaker.

1 Check that all wires are properly connected and that all connectors are fully plugged-in.

2 Check that no connectors or wires are damaged.

3 Check that the wiring corresponds with the wiring diagram, see "6.2 Wiring diagram" [▸ 325].

INFORMATION

Correct the wiring as needed.

Is the problem solved?	Action
Yes	No further actions required.
No	Return to "Checking procedures" [▸ 210] of the fan inverter PCB and continue with the next procedure.

To check the fuse of the fan inverter PCB

Prerequisite: First perform all earlier checks of the fan inverter PCB, see "Checking procedures" [▸ 210].

1 Measure the continuity of the fuse. If no continuity is measured, the fuse has blown.

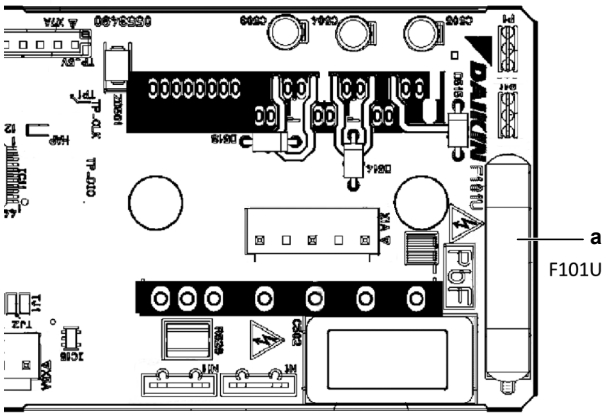

a Fuse

Blown fuse on the fan inverter PCB?	Action
Yes	Replace the fan inverter PCB, see "Repair procedures" [▸ 214].
No	Return to "Checking procedures" [▸ 210] of the fan inverter PCB and continue with the next procedure.

To perform a power transistor check of the fan inverter PCB

Prerequisite: First perform all earlier checks of the fan inverter PCB, see "Checking procedures" [▸ 210].

Prerequisite: Stop the unit operation via the central controller.

Prerequisite: Turn OFF the respective circuit breaker.

1 Set the multimeter to diode measurement.

DANGER: RISK OF ELECTROCUTION

Confirm the rectifier voltage is below 10 V DC before proceeding, see "To prevent electrical hazards" [▸ 299].

2 Disconnect the connector X1A and Faston connectors P1 and N1 from the fan inverter PCB.

3 Check the fan inverter PCB in reference with the tables below.

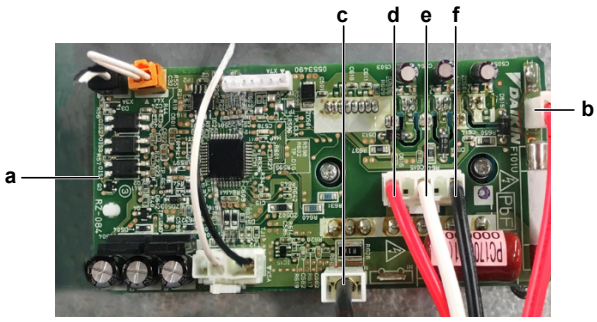

a Fan inverter PCB A4P
b Connector P1
c Connector N1
d Connector X1A, pin U
e Connector X1A, pin V
f Connector X1A, pin W

VDC	Com	Ref	VDC	Com	Ref
P1	X1A, pin U	O.L	N1	X1A, pin V	0,45
P1	X1A, pin V	O.L	N1	X1A, pin W	0,45
P1	X1A, pin W	O.L	X1A, pin U	N1	O.L
X1A, pin U	P1	0,45	X1A, pin V	N1	O.L
X1A, pin V	P1	0,45	X1A, pin W	N1	O.L
X1A, pin W	P1	0,45	P1	N1	O.L
N1	X1A, pin U	0,45	N1	P1	0,75

Are the test results OK?	Action
Yes	Power transistors are OK. Return to "Checking procedures" [▸ 210].
No	Replace the fan inverter PCB, see "Repair procedures" [▸ 214].

Problem solved?

After all checking procedures listed above have been performed:

Is the problem solved?	Action
Yes	No further actions required.
No	Return to the troubleshooting of the specific error and continue with the next procedure.

Repair procedures

To remove the fan inverter PCB

Prerequisite: Stop the unit operation via the central controller.

Prerequisite: Turn OFF the respective circuit breaker.

Prerequisite: Remove the required plate work, see "3.13 Plate work" [▸ 270].

Prerequisite: Access the switch box, see "3.13 Plate work" [▸ 270].

1 Locate the fan inverter PCB.

2 Using pliers, detach the cable clamp from the power terminal assembly.

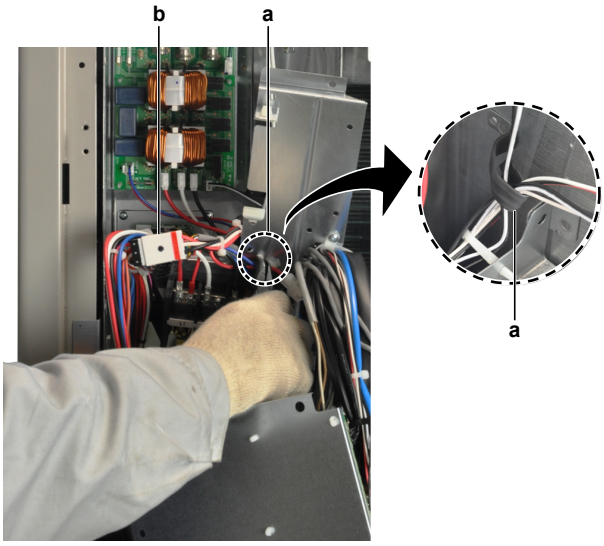

a Cable clamp

b Fan connector X1A

3 Disconnect the fan connector X1A from the fan inverter PCB.

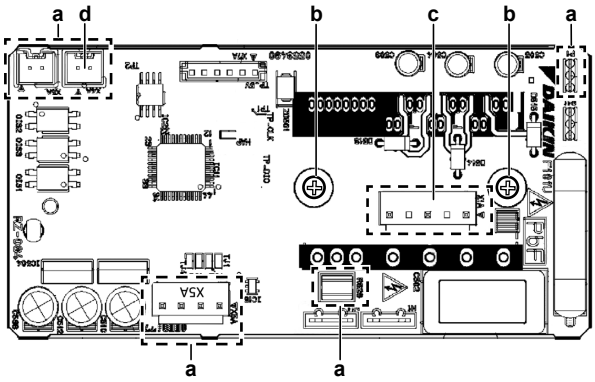

a Connector
b Screw
c Connector X1A
d Connector X4A

4 Disconnect all other connectors from the fan inverter PCB.

> **INFORMATION**
>
> Bridge connector X4A is not supplied with the spare part PCB. Transfer the bridge connector X4A.

5 Loosen and remove the 4 screws that fix the fan inverter PCB assembly.

6 Loosen and remove the 2 screws that fix the fan inverter PCB to the heat sink plate.

7 Carefully pull the PCB at the side and unlatch the PCB supports one by one using a small pair of pliers.

8 To install the new fan inverter PCB, see "Repair procedures" [▶ 214].

To install the fan inverter PCB

1 Clean the heat sink surface and apply a thin layer of heat sink compound to the heat sink surface.

2 Install the fan inverter PCB on its correct location.

3 Latch the PCB supports using a small pair of pliers to fix the PCB.

4 Install and tighten the 2 screws to fix the fan inverter PCB to the heat sink plate.

5 Install and tighten the 4 screws to fix the fan inverter PCB assembly.

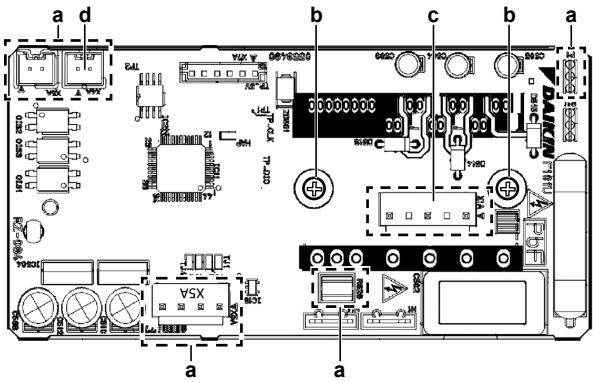

a Connector
b Screw
c Connector X1A
d Connector X4A

6 Connect all connectors to the fan inverter PCB.

7 Reinstall connector X4A which you recuperated from the removed PCB.

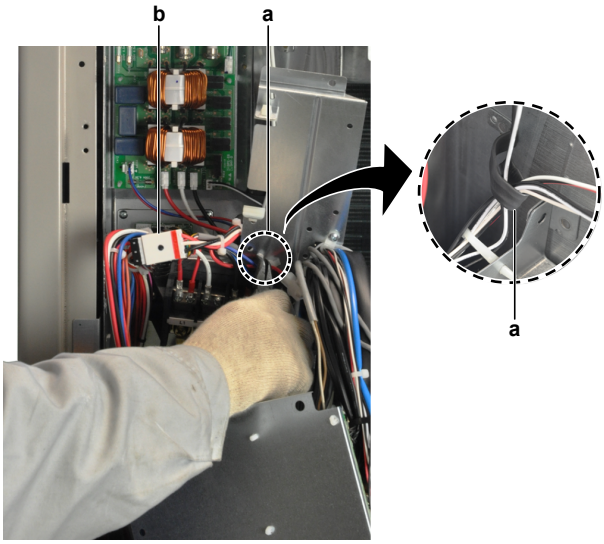

a Cable clamp
b Fan connector X1A

8 Connect fan connector X1A.

9 Reinstall the cable clamp.

Is the problem solved?	Action
Yes	No further actions required.
No	Return to "Checking procedures" [▸ 210] of the fan inverter PCB and continue with the next procedure.

3.6.2 Double fan outdoor unit

Checking procedures

> **INFORMATION**
> It is recommended to perform the checks in the listed order.

To perform a power check of the fan inverter PCB

Prerequisite: Stop the unit operation via the central controller.

Prerequisite: Turn OFF the respective circuit breaker.

Prerequisite: Remove the required plate work, see "3.13 Plate work" [▸ 270].

Prerequisite: Access the switch box, see "3.13 Plate work" [▸ 270].

1 Turn ON the power of the unit.

2 Measure the voltage between pins 1 and 3 of connector X5A.

Result: The measured voltage MUST be 18 V DC.

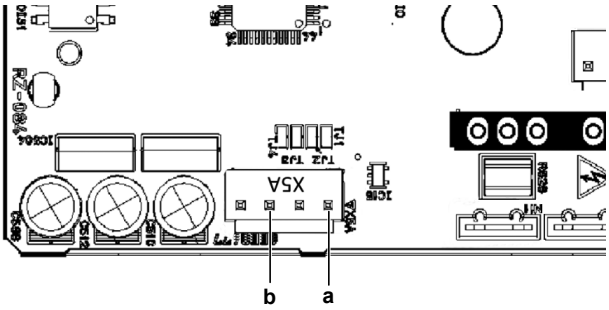

a Pin 1
b Pin 3

Is the measured voltage on the PCB correct?	Action
Yes	Return to "Checking procedures" [▸ 216] procedures of the PCB and continue with the next procedure.
No	Continue with the next step.

3 Measure the output voltage on connector X601A on the inverter PCB.

Result: The measured voltage MUST be 18 V DC.

Is the measured output voltage on the inverter PCB correct?	Action
Yes	Correct the wiring between the fan inverter PCB and the inverter PCB, see "4.1.2 Repair procedures" [▸ 304].
No	Perform a check of the inverter PCB, see "3.8.1 Checking procedures" [▸ 225].

To check the HAP LED of the fan inverter PCB

1 First perform a power check of the fan inverter PCB, see "Checking procedures" [▸ 216].

> **INFORMATION**
> Make sure that the PCB is NOT in stand-by mode. The HAP LED will NOT blink when in stand-by mode.

2 Locate the HAP LED on the fan inverter PCB.

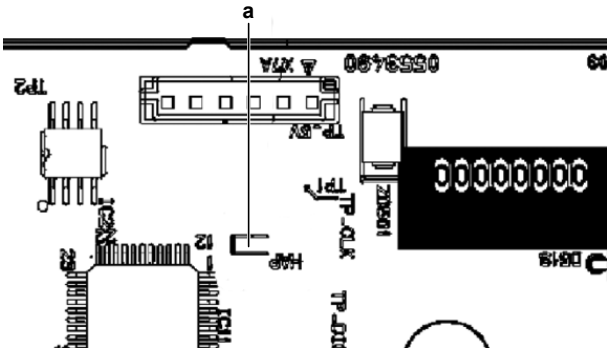

a HAP LED

Does the HAP LED blink in regular intervals (approximately 1 Hz)?	Action
Yes	Return to "Checking procedures" [▶ 216] of the fan inverter PCB and continue with the next procedure.
No	Replace the fan inverter PCB, see "Repair procedures" [▶ 221].

To check if the correct spare part is installed

Prerequisite: First perform all earlier checks of the fan inverter PCB, see "Checking procedures" [▶ 216].

1 Visit your local spare parts webbank.

2 Enter the model name of your unit and check if the installed spare part number corresponds with the spare part number indicated in the webbank.

Is the correct spare part for the fan inverter PCB installed?	Action
Yes	Return to "Checking procedures" [▶ 216] of the fan inverter PCB and continue with the next procedure.
No	Replace the fan inverter PCB, see "Repair procedures" [▶ 221].

To check the wiring of the fan inverter PCB

Prerequisite: First perform all earlier checks of the fan inverter PCB, see "Checking procedures" [▶ 216].

Prerequisite: Stop the unit operation via the central controller.

Prerequisite: Turn OFF the respective circuit breaker.

1 Check that all wires are properly connected and that all connectors are fully plugged-in.

2 Check that no connectors or wires are damaged.

3 Check that the wiring corresponds with the wiring diagram, see "6.2 Wiring diagram" [▶ 325].

INFORMATION

Correct the wiring as needed.

Is the problem solved?	Action
Yes	No further actions required.
No	Return to "Checking procedures" [▶ 216] of the fan inverter PCB and continue with the next procedure.

To check the fuse of the fan inverter PCB

Prerequisite: First perform all earlier checks of the fan inverter PCB, see "Checking procedures" [▶ 216].

1 Measure the continuity of the fuse. If no continuity is measured, the fuse has blown.

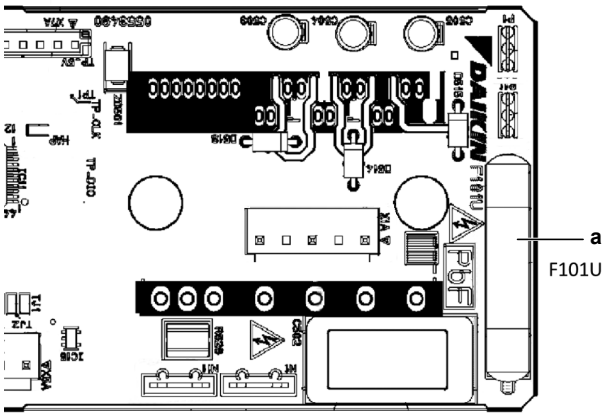

a Fuse

Blown fuse on the fan inverter PCB?	Action
Yes	Replace the fan inverter PCB, see "Repair procedures" [▶ 221].
No	Return to "Checking procedures" [▶ 216] of the fan inverter PCB and continue with the next procedure.

To perform a power transistor check of the fan inverter PCB

Prerequisite: First perform all earlier checks of the fan inverter PCB, see "Checking procedures" [▶ 216].

Prerequisite: Stop the unit operation via the central controller.

Prerequisite: Turn OFF the respective circuit breaker.

1 Set the multimeter to diode measurement.

DANGER: RISK OF ELECTROCUTION

Confirm the rectifier voltage is below 10 V DC before proceeding, see "To prevent electrical hazards" [▶ 299].

2 Disconnect the connector X1A and Faston connectors P11 and N11 from the fan inverter PCB.

3 Check the fan inverter PCB in reference with the tables below.

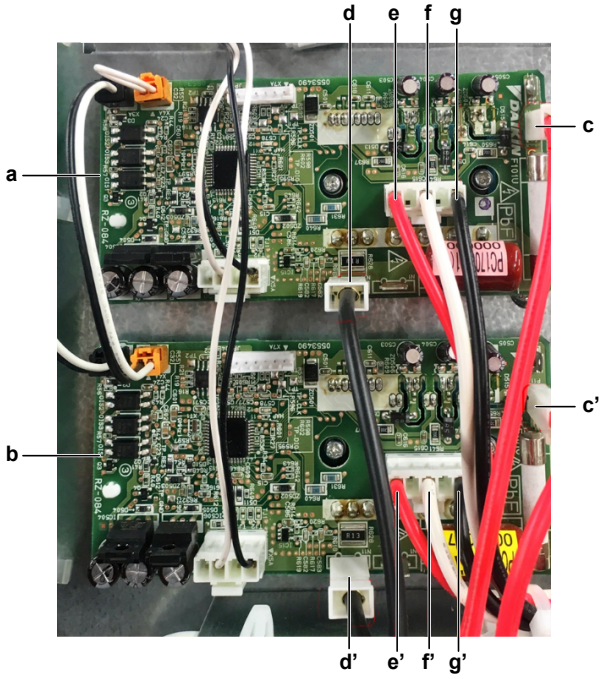

a	Fan inverter PCB A4P
b	Fan inverter PCB A5P or A7P
c / c'	Connector P11
d / d'	Connector N11
e / e'	Connector X1A, pin U
f / f'	Connector X1A, pin V
g / g'	Connector X1A, pin W

VDC	Com	Ref	VDC	Com	Ref
P11	X1A, pin U	O.L	N11	X1A, pin V	0,45
P11	X1A, pin V	O.L	N11	X1A, pin W	0,45
P11	X1A, pin W	O.L	X1A, pin U	N11	O.L
X1A, pin U	P11	0,45	X1A, pin V	N11	O.L
X1A, pin V	P11	0,45	X1A, pin W	N11	O.L
X1A, pin W	P11	0,45	P11	N11	O.L
N11	X1A, pin U	0,45	N11	P11	0,75

Are the test results OK?	Action
Yes	Power transistors are OK. Return to "Checking procedures" [▸ 216].
No	Replace the fan inverter PCB, see "Repair procedures" [▸ 221].

Problem solved?

After all checking procedures listed above have been performed:

Is the problem solved?	Action
Yes	No further actions required.
No	Return to the troubleshooting of the specific error and continue with the next procedure.

Repair procedures

To remove the fan inverter PCB

Prerequisite: Stop the unit operation via the central controller.

Prerequisite: Turn OFF the respective circuit breaker.

Prerequisite: Remove the required plate work, see "3.13 Plate work" [▶ 270].

1 Access the switch box, see "3.13 Plate work" [▶ 270].

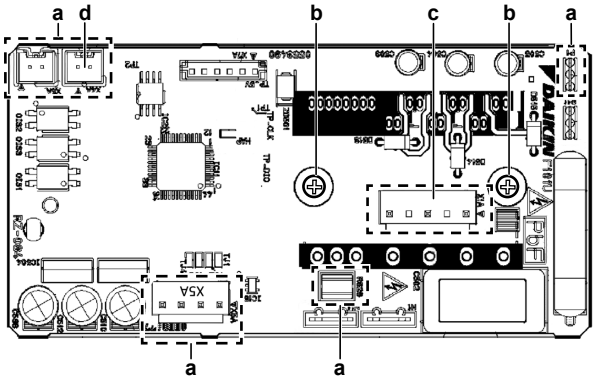

- **a** Connector
- **b** Screw
- **c** Connector X1A
- **d** Connector X4A

2 Disconnect all other connectors from the fan inverter PCB.

> **INFORMATION**
>
> Bridge connector X4A is not supplied with the spare part PCB. Transfer the bridge connector X4A.

3 Loosen and remove the 2 screws that fix the fan inverter PCB to the heat sink plate.

4 Remove the fan inverter PCB.

5 To install the new fan inverter PCB, see "Repair procedures" [▶ 221].

To install the fan inverter PCB

1 Clean the heat sink surface and apply a thin layer of heat sink compound to the heat sink surface.

2 Install the fan inverter PCB on its correct location.

3 Install and tighten the 2 screws to fix the fan inverter PCB to the heat sink plate.

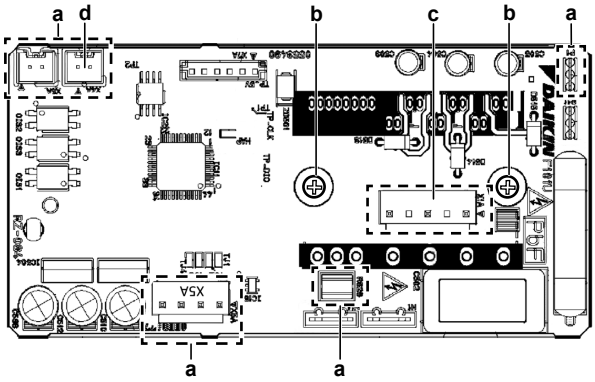

- **a** Connector
- **b** Screw
- **c** Connector X1A

d Connector X4A

4 Connect all connectors to the fan inverter PCB.

5 Reinstall connector X4A which you recuperated from the removed PCB.

Is the problem solved?	Action
Yes	No further actions required.
No	Return to "Checking procedures" [▸ 216] of the fan inverter PCB and continue with the next procedure.

3.7 High pressure switch

3.7.1 Checking procedures

To perform an electrical check of the high pressure switch

Prerequisite: Stop the unit operation via the central controller.

Prerequisite: Turn OFF the respective circuit breaker.

Prerequisite: Remove the required plate work, see "3.13 Plate work" [▸ 270].

1 Recuperate the refrigerant from the refrigerant circuit, see "4.2.2 Repair procedures" [▸ 311].

2 Fill the refrigerant circuit with nitrogen until pressurized just below operating pressure of the high pressure switch.

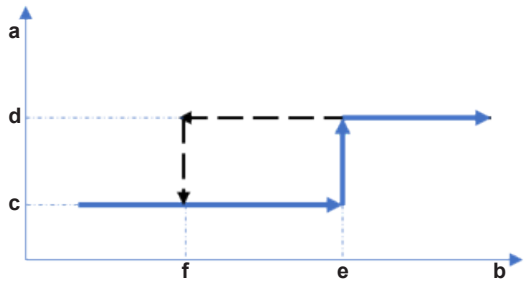

a High pressure switch protection control
b Pressure
c High pressure switch closed
d High pressure switch open
e High pressure switch operating pressure
f High pressure switch reset pressure

> **INFORMATION**
> See "6.6 Safety devices" [▸ 374] for the high pressure switch operating and reset pressure values.

3 Disconnect the high pressure switch connector from the PCB.

> **INFORMATION**
> Measure the continuity of all wiring between the high pressure switch and the appropriate PCB. If NO continuity is measured, repair as needed, see "6.2 Wiring diagram" [▸ 325].

4 Measure the resistance between the pins 1-2 of the high pressure switch connector.

Result: The switch MUST be closed.

5 Fill the refrigerant circuit with nitrogen until pressurized just above operating pressure of the high pressure switch.

6 Measure the resistance between the pins 1-2 of the high pressure switch connector.

Result: The switch MUST be open.

> **INFORMATION**
> If the high pressure switch was triggered open, it will stay open until the refrigerant pressure drops below the reset pressure of the high pressure switch.

7 Lower the pressure of the nitrogen in the refrigerant circuit just above reset pressure of the high pressure switch.

8 Measure the resistance between the pins 1-2 of the high pressure switch connector.

Result: The switch MUST be open.

9 Lower the pressure of the nitrogen in the refrigerant circuit just below reset pressure of the high pressure switch.

10 Measure the resistance between the pins 1-2 of the high pressure switch connector.

Result: The switch MUST be closed.

High pressure switch connector measurements are correct?	Then
Yes	High pressure switch is OK. Return to the troubleshooting of the specific error and continue with the next procedure.
No	Replace the high pressure switch, see "3.7.2 Repair procedures" [▸ 223].

3.7.2 Repair procedures

To remove the high pressure switch

Prerequisite: Stop the unit operation via the central controller.

Prerequisite: Turn OFF the respective circuit breaker.

Prerequisite: Remove the required plate work, see "3.13 Plate work" [▸ 270].

Prerequisite: Recuperate the refrigerant from the refrigerant circuit, see "4.2.2 Repair procedures" [▸ 311].

1 If needed, remove any parts to create more space for the removal of the high pressure switch.

2 Disconnect the high pressure switch connector from the PCB.

3 Cut all tie straps that fix the high pressure switch harness.

4 Remove the screws, the clamps and the plate.

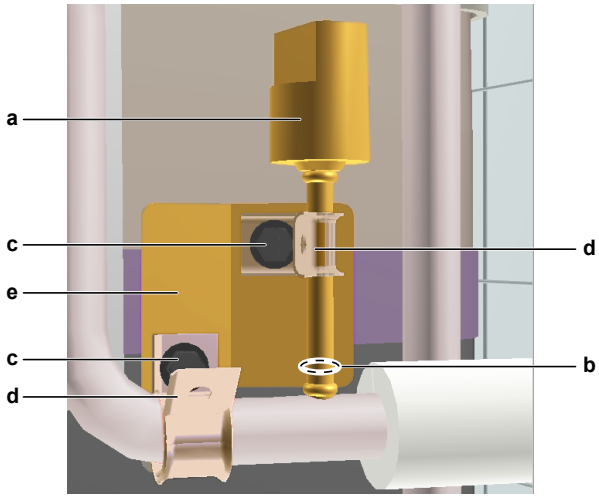

a High pressure switch
b High pressure switch pipe
c Screw
d Clamp
e Plate

5. Supply nitrogen to the refrigerant circuit. The nitrogen pressure MUST NOT exceed 0.02 MPa.
6. Wrap a wet rag around the components near the high pressure switch. Heat the brazing point of the high pressure switch pipe using an oxygen acetylene torch and remove the high pressure switch pipe from the refrigerant pipe using pliers.
7. Stop the nitrogen supply when the piping has cooled down.
8. Remove the high pressure switch.

> **INFORMATION**
> It is ALSO possible to cut the component pipe(s) using a pipe cutter. Make sure to remove the remaining component pipe end(s) from the refrigerant pipes by heating the brazing point(s) of the component pipe(s) using an oxygen acetylene torch.

9. Install a plug or cap on the refrigerant piping to avoid dirt or impurities from entering the piping.
10. To install the high pressure switch, see "3.7.2 Repair procedures" [▸ 223].

To install the high pressure switch

1. Remove the plug or cap from the refrigerant piping and make sure it is clean.
2. Install the high pressure switch in the correct location.
3. Supply nitrogen to the refrigerant circuit. The nitrogen pressure MUST NOT exceed 0.02 MPa.
4. Wrap a wet rag around the high pressure switch and any other components near the high pressure switch and solder the high pressure switch pipe to the refrigerant pipe.

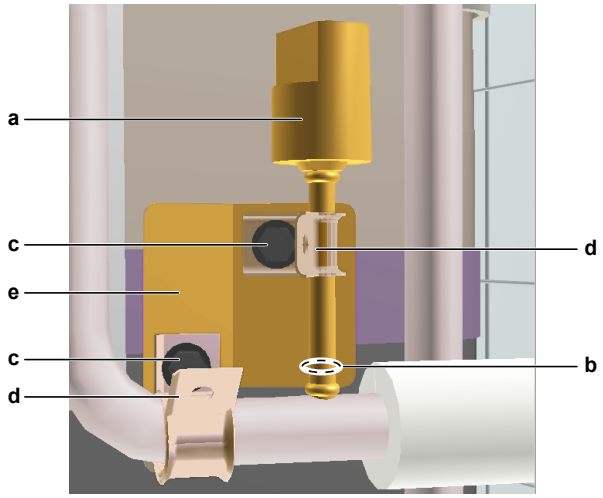

a High pressure switch
b High pressure switch pipe
c Screw
d Clamp
e Plate

CAUTION

Overheating the pressure switch will damage or destroy it.

5 After soldering is done, stop the nitrogen supply after the component has cooled-down.

6 Install the clamps, the screws and the plate.

7 Route the high pressure switch harness towards the appropriate PCB.

8 Connect the high pressure switch connector to the PCB.

9 Install new tie straps to fix the high pressure switch harness.

10 Perform a pressure test, see "4.2.1 Checking procedures" [▸ 306].

11 Add refrigerant to the refrigerant circuit, see "4.2.2 Repair procedures" [▸ 311].

Is the problem solved?	Action
Yes	No further actions required.
No	Return to the troubleshooting of the specific error and continue with the next procedure.

3.8 Inverter PCB

3.8.1 Checking procedures

INFORMATION

It is recommended to perform the checks in the listed order.

To perform a power check of the inverter PCB

Prerequisite: Stop the unit operation via the central controller.

Prerequisite: Turn OFF the respective circuit breaker.

Prerequisite: Remove the required plate work, see "3.13 Plate work" [▶ 270].

Prerequisite: Access the switch box, see "3.13 Plate work" [▶ 270].

1 Turn ON the power of the unit.

> **DANGER: RISK OF ELECTROCUTION**
>
> Do NOT touch any live parts or PCB's.

2 Measure the voltage between the following wires on the inverter PCB.

Result: All measurements MUST be 400 V AC.

- L1B –L2B
- L1B –L3B
- L2B –L3B

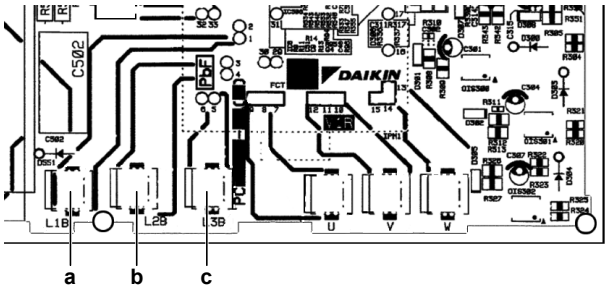

a Wire L1B
b Wire L2B
c Wire L3B

Does the inverter PCB receive power?	Action
Yes	Return to "3.8.1 Checking procedures" [▶ 225] of the inverter PCB and continue with the next procedure.
No	Continue with the next step.

3 Perform an electrical check of the noise filter PCB, see "3.10.1 Checking procedures" [▶ 252].

Electrical check of noise filter PCB correct?	Action
Yes	Correct the wiring between the inverter PCB and the noise filter PCB, see "4.1.2 Repair procedures" [▶ 304].
No	Perform a check of the noise filter PCB, see "3.10.1 Checking procedures" [▶ 252].

To check the HAP LED of the inverter PCB

1 First perform a power check of the inverter PCB, see "3.8.1 Checking procedures" [▶ 225].

> **INFORMATION**
>
> Make sure that the PCB is NOT in stand-by mode. The HAP LED will NOT blink when in stand-by mode.

2 If needed wake up the PCB by performing one of the following actions:

- Turn OFF and then ON the power to the unit,
- Turn OFF the power supply to the main PCB by unplugging and then plugging the connector X1A;
- Create a forced thermo-ON condition by setting field setting 2–6 = 1 (forced thermo-ON indoor) or field setting 2–20 = 1 (manual refrigerant charge). See "6.9 Field settings" [▸ 380]. Once HAP LED blinks, immediately change related field setting (2–6 or 2–20) back to 0 to deactivate related function.

3 Locate the HAP LED on the inverter PCB.

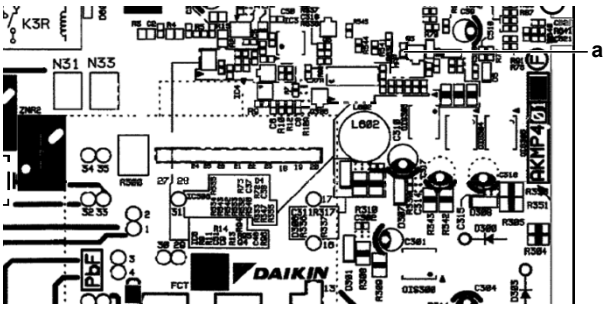

a HAP LED

Does the HAP LED blink in regular intervals (approximately 1 Hz)?	Action
Yes	Return to "3.8.1 Checking procedures" [▸ 225] of the inverter PCB and continue with the next procedure.
No	Replace the inverter PCB, see "3.8.2 Repair procedures" [▸ 235].

To check if the correct spare part is installed

Prerequisite: First perform all earlier checks of the inverter PCB, see "3.8.1 Checking procedures" [▸ 225].

1 Visit your local spare parts webbank.

2 Enter the model name of your unit and check if the installed spare part number corresponds with the spare part number indicated in the webbank.

Is the correct spare part for the inverter PCB installed?	Action
Yes	Return to "3.8.1 Checking procedures" [▸ 225] of the inverter PCB and continue with the next procedure.
No	Replace the inverter PCB, see "3.8.2 Repair procedures" [▸ 235].

To check the wiring of the inverter PCB

Prerequisite: First perform all earlier checks of the inverter PCB, see "3.8.1 Checking procedures" [▸ 225].

Prerequisite: Stop the unit operation via the central controller.

Prerequisite: Turn OFF the respective circuit breaker.

1 Wait until the rectifier voltage is below 10 V DC.

DANGER: RISK OF ELECTROCUTION

Confirm the rectifier voltage is below 10 V DC before proceeding, see "To prevent electrical hazards" [▶ 299].

2 Check that all wires are properly connected and that all connectors are fully plugged-in.

3 Check that no connectors or wires are damaged.

4 Check that the wiring corresponds with the wiring diagram, see "6.2 Wiring diagram" [▶ 325].

INFORMATION

Correct the wiring as needed.

Is the problem solved?	Action
Yes	No further actions required.
No	Return to "3.8.1 Checking procedures" [▶ 225] of the inverter PCB and continue with the next procedure.

To check the fuses of the inverter PCB

Prerequisite: First perform all earlier checks of the inverter PCB, see "3.8.1 Checking procedures" [▶ 225].

1 Measure the continuity of the fuse. If no continuity is measured, the fuse has blown.

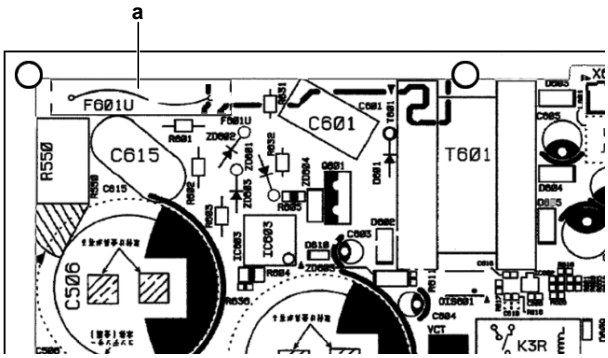

a Fuse

Any blown fuses on the inverter PCB?	Action
Yes	Replace the inverter PCB, see "3.8.2 Repair procedures" [▶ 235].
No	Return to "3.8.1 Checking procedures" [▶ 225] of the inverter PCB and continue with the next procedure.

To check the rectifier voltage of the inverter PCB

Prerequisite: First perform all earlier checks of the inverter PCB, see "3.8.1 Checking procedures" [▶ 225].

1 Turn ON the power of the unit.

For single fan units

2 Measure the voltage on the rectifier voltage check connector X3A, located above the power terminal assembly.

Result: The measured voltage should be approximately 560 V DC.

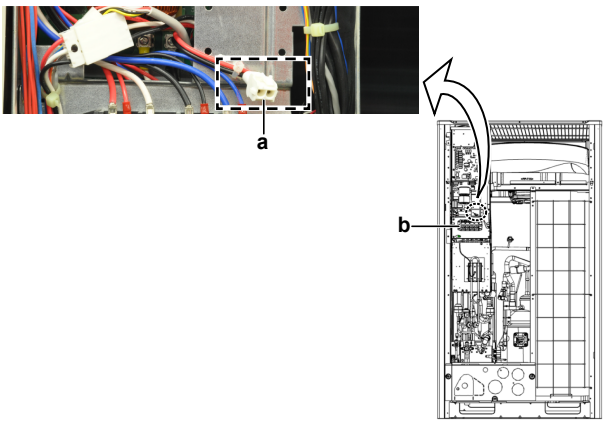

a Connector X3A
b Power terminal assembly

For double fan units

3 Measure the voltage on the rectifier voltage check connector X5A to check inverter PCB A3P.

Result: The measured voltage should be approximately 560 V DC.

4 Measure the voltage on the rectifier voltage check connector X6A to check inverter PCB A6P.

Result: The measured voltage should be approximately 560 V DC.

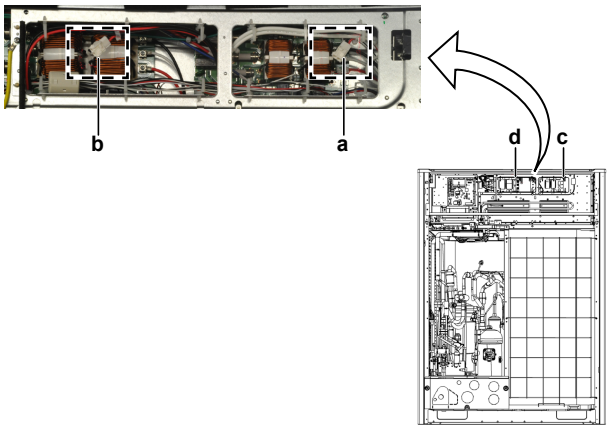

a Connector X5A
b Connector X6A
c Inverter PCB A3P
d Inverter PCB A6P

Is the measured voltage correct?	Action
Yes	Diode module is OK. Perform a check of the power module of the inverter PCB, see "3.8.1 Checking procedures" [▸ 225].
No	Continue with the next step.

5 Perform a check of the reactor, see "3.14.1 Checking procedures" [▸ 281].

Is the reactor OK?	Action
Yes	Replace the inverter PCB, see "3.8.2 Repair procedures" [▶ 235].
No	Replace the reactor, see "3.14.2 Repair procedures" [▶ 282].

To perform a diode module check

1 First check the rectifier voltage of the inverter PCB, see "3.8.1 Checking procedures" [▶ 225].

> **INFORMATION**
>
> If the rectifier voltage is OK, the diode module is OK. If rectifier voltage is NOT OK, proceed as described in the rectifier voltage check procedure.
>
> Below procedure describes how to check the diode module itself.

2 Stop the unit operation via the central controller.

3 Turn OFF the respective circuit breaker.

> **DANGER: RISK OF ELECTROCUTION**
>
> Confirm the rectifier voltage is below 10 V DC before proceeding, see "To prevent electrical hazards" [▶ 299].

4 Disconnect the wire terminals and Faston connectors L1B, L2B, L3B, P1 and N31 from the inverter PCB.

5 Check the diode module in reference with the table below.

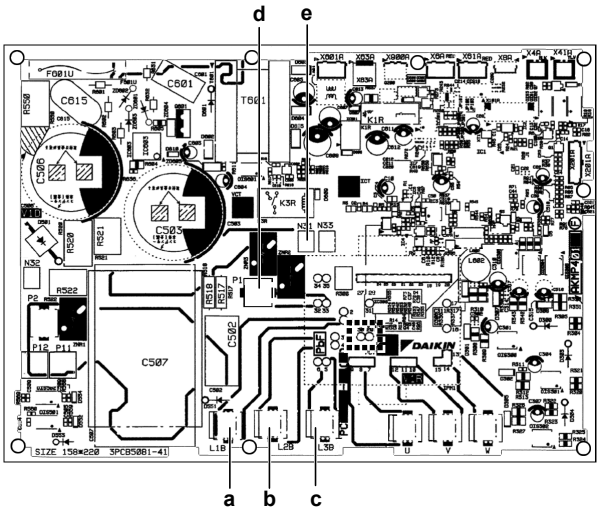

a Wire terminal L1B
b Wire terminal L2B
c Wire terminal L3B
d Wire terminal P1
e Faston connector terminal N31

VDC	Com	Ref	VDC	Com	Ref
P1	L1B	O.L	N31	L1B	0,50
P1	L2B	O.L	N31	L2B	0,50
P1	L3B	O.L	N31	L3B	0,50
L1B	P1	0,50	L1B	N31	O.L
L2B	P1	0,50	L2B	N31	O.L

VDC	Com	Ref	VDC	Com	Ref
L3B	P1	0,50	L3B	N31	O.L
			N31	P1	0,90
			P1	N31	O.L

6 If the diode module is NOT ok, replace the inverter PCB, see "3.8.2 Repair procedures" [▶ 235].

To perform a power module check

Prerequisite: First check the rectifier voltage of the inverter PCB, see "3.8.1 Checking procedures" [▶ 225].

Prerequisite: Stop the unit operation via the central controller.

Prerequisite: Turn OFF the respective circuit breaker.

1 Open the compressor insulation.

DANGER: RISK OF ELECTROCUTION

Confirm the rectifier voltage is below 10 V DC before proceeding, see "To prevent electrical hazards" [▶ 299].

2 Remove the cover of the compressor wire terminals.

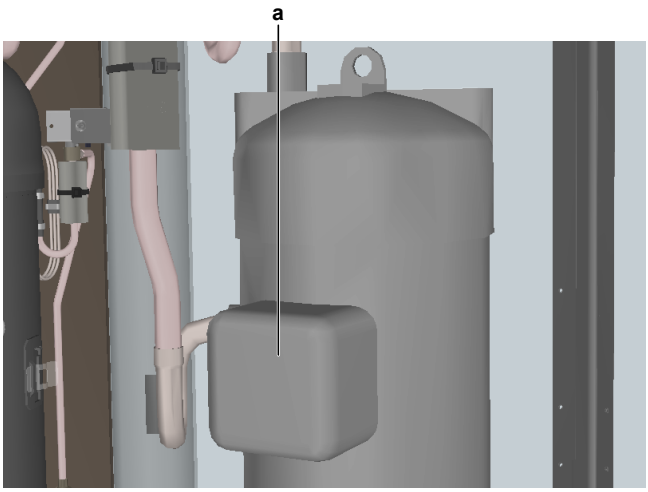

a Compressor wire terminals cover

3 Disconnect the Faston connectors from the compressor wire terminals U, V and W.

INFORMATION

Note the position of the Faston connectors on the compressor wire terminals to allow correct connection during installation.

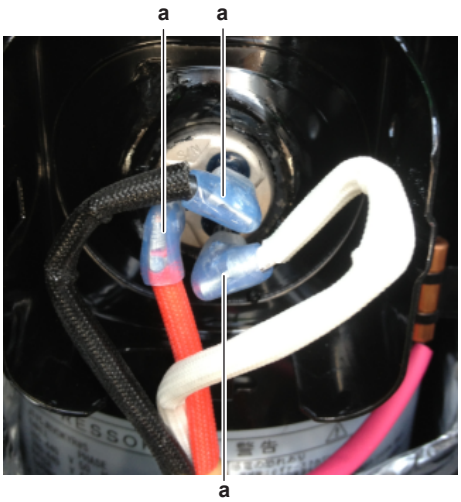

a Faston connector

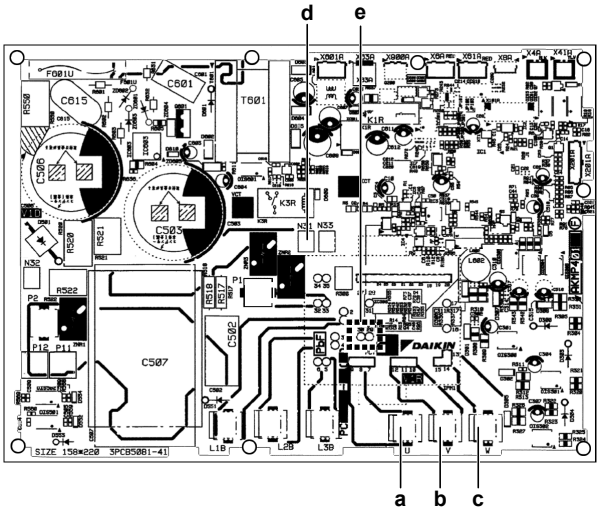

a Wire terminal U
b Wire terminal V
c Wire terminal W
d Faston connector terminal N31
e Measuring point P

4 Check the power module in reference with the table below.

VDC	Com	Ref	VDC	Com	Ref
P	U	O.L	N31	U	0,43
P	V	O.L	N31	V	0,43
P	W	O.L	N31	W	0,43
U	P	0,43	U	N31	O.L
V	P	0,43	V	N31	O.L
W	P	0,43	W	N31	O.L
			N31	P	0,78
			P	N31	O.L

Are the test results OK?	Action
Yes	Return to "3.8.1 Checking procedures" [▸ 225] of the inverter PCB and continue with the next procedure.

Are the test results OK?	Action
No	Replace the inverter PCB, see "3.8.2 Repair procedures" [▶ 235].

To perform a power transistor check of the inverter PCB

Prerequisite: First perform all earlier checks of the inverter PCB, see "3.8.1 Checking procedures" [▶ 225].

Prerequisite: Stop the unit operation via the central controller.

Prerequisite: Turn OFF the respective circuit breaker.

1 Open the compressor insulation.

> **DANGER: RISK OF ELECTROCUTION**
>
> Confirm the rectifier voltage is below 10 V DC before proceeding, see "To prevent electrical hazards" [▶ 299].

2 Remove the cover of the compressor wire terminals.

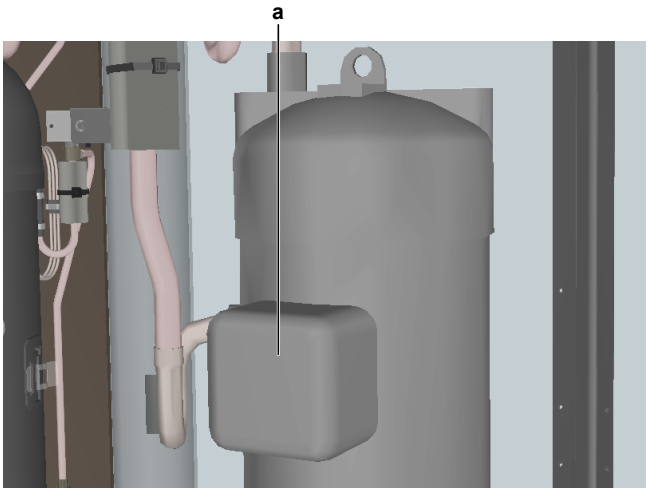

a Compressor wire terminals cover

3 Disconnect the Faston connectors from the compressor wire terminals U, V and W.

> **INFORMATION**
>
> Note the position of the Faston connectors on the compressor wire terminals to allow correct connection during installation.

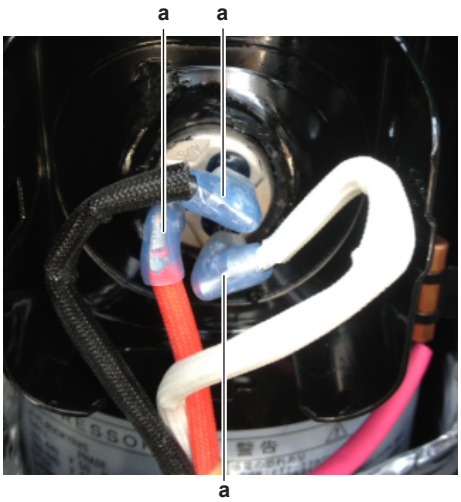

a Faston connector

> **CAUTION**
>
> Power transistor check mode is activated ONLY on the main PCB of the main outdoor unit. When there is more than 1 compressor in the unit or if the system is a multi-combination, all inverter PCB's will perform a power transistor check. All compressor wiring of all available compressors MUST be disconnected and safely secured before power transistor check mode is activated. Do NOT touch the compressor wiring and do NOT short-circuit to ground through unit casing. Secure the compressor wiring to avoid touching them accidentally.

4 Connect the Faston connectors to the Inverter Analyzer (SPP number 1368521).

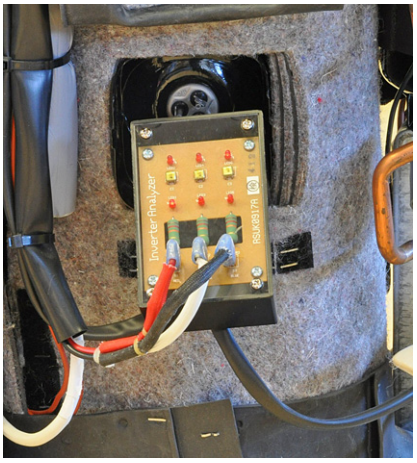

a Inverter checker
b Faston terminal U
c Faston terminal V
d Faston terminal W
e 2 LEDs for phase U
f 2 LEDs for phase V
g 2 LEDs for phase W

5 Turn ON the power of the unit.

6 Activate power transistor check mode by applying field setting 2-28=1.

Result: If all 6 LEDs on inverter checker module blink, then it means that the transistors on the inverter PCB switch correctly.

7 To exit the power transistor check mode, set 2-28=0.

Result: 2 LEDs on inverter checker module for V phase will indicate the discharge status of the DC voltage.

8 Wait until the LEDs are OFF before disconnecting U, V and W connections from the inverter checker.

9 Turn OFF the unit via the circuit breaker.

DANGER: RISK OF ELECTROCUTION

Confirm the rectifier voltage is below 10 V DC before proceeding, see "To prevent electrical hazards" [▶ 299].

10 Disconnect the Inverter Analyzer from the Faston connectors.

11 Connect the compressor wiring to the wire terminals U, V and W of the compressor.

INFORMATION

Use the notes made during disconnection to connect the compressor wiring to the correct wire terminals of the compressor.

Are the test results OK?	Action
Yes	Power transistors are OK. Return to "3.8.1 Checking procedures" [▶ 225].
No	Replace the inverter PCB, see "3.8.2 Repair procedures" [▶ 235].

Problem solved?

After all checking procedures listed above have been performed:

Is the problem solved?	Action
Yes	No further actions required.
No	Return to the troubleshooting of the specific error and continue with the next procedure.

3.8.2 Repair procedures

To remove the inverter PCB

Prerequisite: Stop the unit operation via the central controller.

Prerequisite: Turn OFF the respective circuit breaker.

Prerequisite: Remove the required plate work, see "3.13 Plate work" [▶ 270].

1 Access the switch box, see "3.13 Plate work" [▶ 270].

DANGER: RISK OF ELECTROCUTION

Confirm the rectifier voltage is below 10 V DC before proceeding, see "To prevent electrical hazards" [▶ 299].

For single fan units

1 Loosen and remove the screws that fix the power terminal assembly.

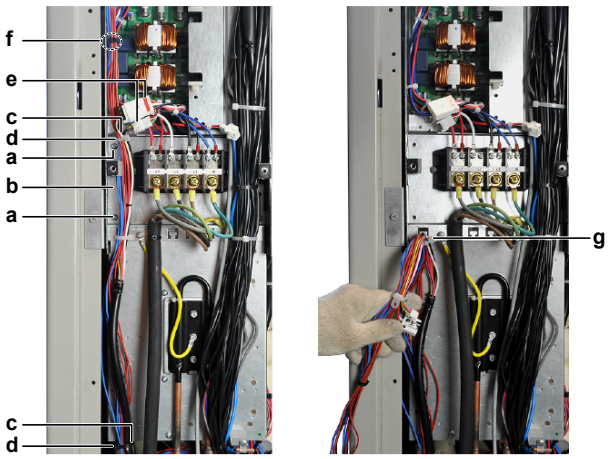

- **a** Screw (power terminal assy)
- **b** Power terminal assembly
- **c** Screw (cable clamp)
- **d** Cable clamp
- **e** Connectors X1A and X2A
- **f** Wiring
- **g** Tie wrap

2 Loosen and remove the 2 screws that fix the cable clamps.

3 Unplug the fan connectors X1A and X2A.

4 Unplug the wiring from the main board.

5 Detach the tie wrap.

6 Loosen and remove the screw that fixes the cable clamp.

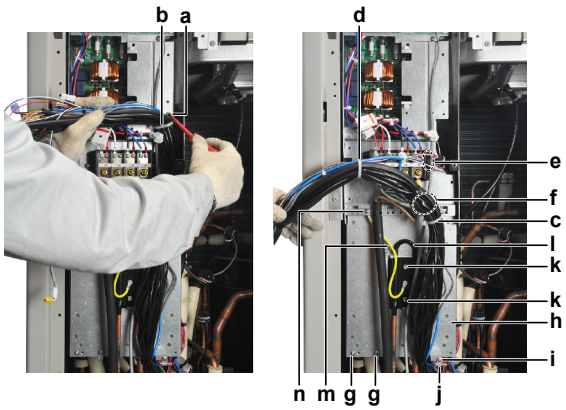

- **a** Screw (cable clamp)
- **b** Cable clamp
- **c** Tie wrap
- **d** Tie wrap
- **e** Cables
- **f** Cables
- **g** Screw (compressor inverter assy)
- **h** Compressor inverter assembly
- **i** Screw (thermistor clamp)
- **j** Thermistor clamp
- **k** Screw (heat pipe)
- **l** Heat pipe
- **m** Ground wire
- **n** Screw (ground wire)

7 Detach the tie wrap.

8 Cut the tie wraps on the cable harness.

9 Separate the cables.

10 Loosen and remove the 2 screws that fix the compressor inverter assembly.

11 Loosen and remove the screw that fixes the thermistor clamp.

12 Loosen and remove the 2 screws that fix the heat pipe.

13 Loosen and remove the screw that fixes the ground wire.

14 Using a flat screwdriver, separate the heat pipe from the heat sink.

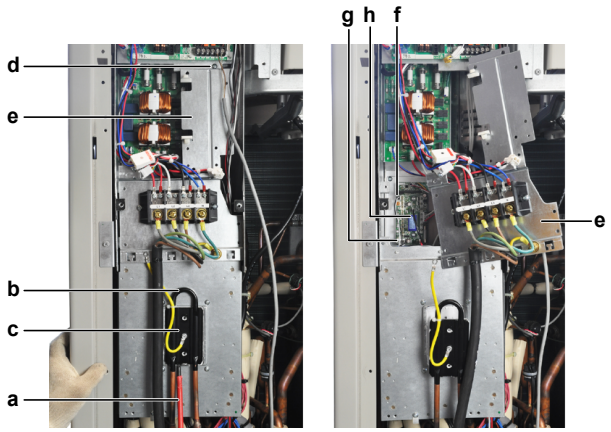

- **a** Flat screwdriver
- **b** Heat pipe
- **c** Heat sink
- **d** Screw
- **e** Power terminal assembly
- **f** Connector X3
- **g** Connector X5
- **h** Fan inverter PCB

15 Loosen and remove the screw that fixes the power terminal assembly.

16 Move the power terminal assembly to the right.

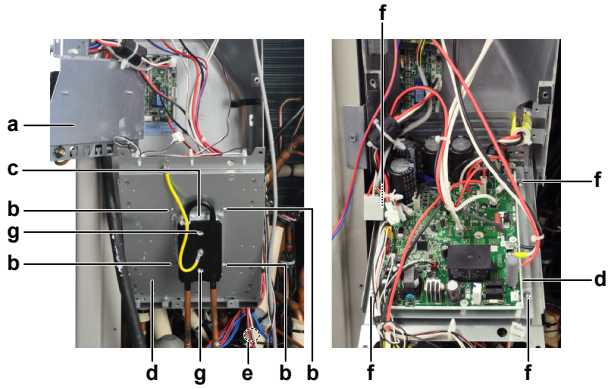

- **a** Power terminal assembly
- **b** Screw (heat sink)
- **c** Heat sink
- **d** Inverter PCB
- **e** Compressor cable
- **f** Screw (inverter PCB)
- **g** Screw (heat sink element)

17 Disconnect connectors X3 and X5 from the fan inverter PCB.

18 Turn the power terminal assembly to the left.

19 Remove the 4 screws that fix the heat sink.

WARNING

Thermal grease is applied to the heat sinks. Use gloves when separating the heat sinks from the inverter boards.

20 Lift and slightly tilt the compressor inverter PCB assembly, guide the compressor cable into the switch box.

21 Put the compressor inverter PCB assembly in horizontal position.

22 Remove the 4 screws that fix the compressor inverter PCB.

23 Disconnect all wiring from the compressor inverter PCB.

24 The compressor inverter PCB is fixed to the heat sink element with screws, through the screw holes on the PCB. Remove the screws to remove the PCB from the heat sink element.

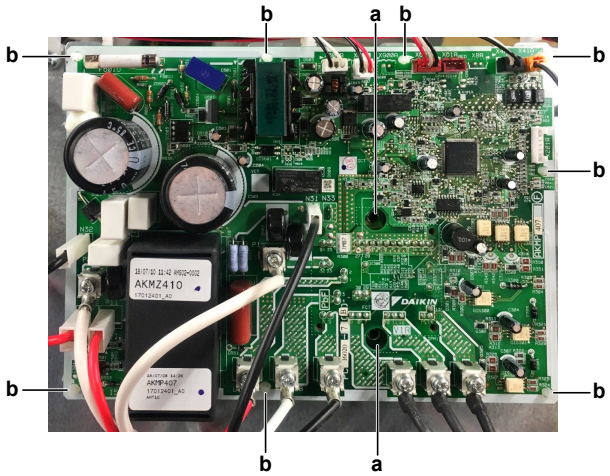

a Screw
b PCB support

25 Unlatch the PCB supports one by one using a small pair of pliers.

26 Remove the inverter PCB.

27 To install the new inverter PCB, see "3.8.2 Repair procedures" [▶ 235].

For double fan units

1 Disconnect all connectors from the inverter PCB.

2 Disconnect the wire terminals of the inverter PCB.

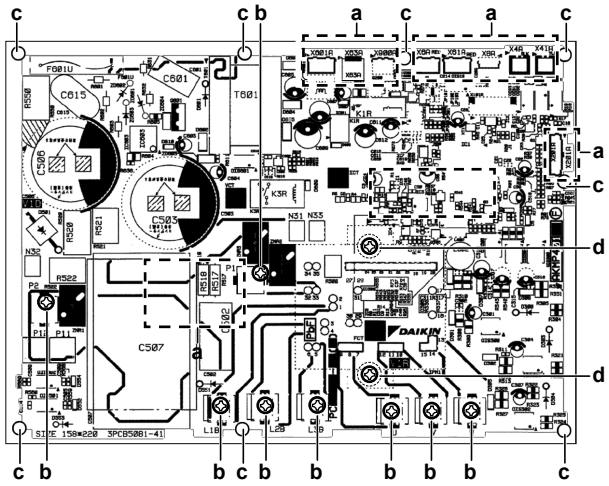

a Connector
b Screw connection
c PCB support
d Screw (heat sink)

3 Remove the 4 screws that fix the heat sink to the switch box.

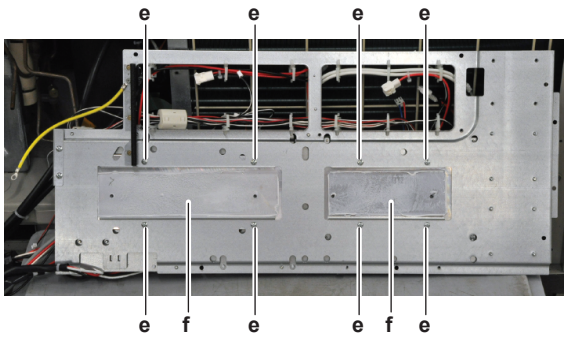

e Screw
f Heat sink

4 Remove the screws that fix the inverter PCB to the heat sink.

> **WARNING**
>
> Thermal grease is applied to the heat sinks. Use gloves when separating the heat sinks from the inverter boards.

5 Unlatch the PCB supports one by one using a small pair of pliers.

6 Remove the inverter PCB.

7 To install the new inverter PCB, see "3.8.2 Repair procedures" [▶ 235].

To install the inverter PCB

For single fan units

1 Clean the heat sink surface and apply a thin layer of heat sink compound to the heat sink surface.

2 Install the inverter PCB on its correct location.

3 Latch the PCB supports to fix the PCB.

4 Install and tighten the 2 screws to fix the inverter PCB to the heat sink plate.

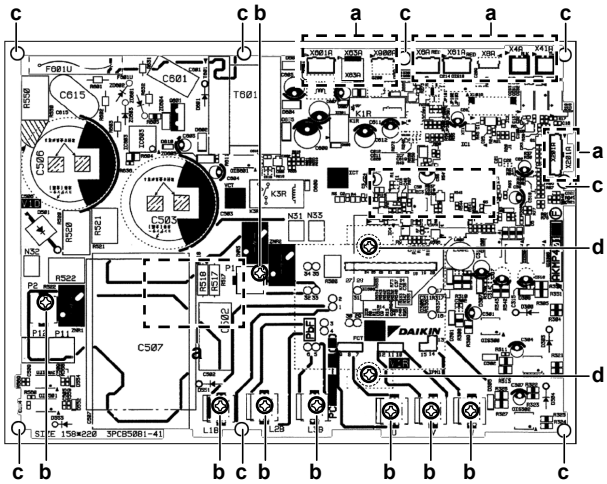

a Connector
b Screw connection
c PCB support
d Screw (heat sink)

5 Install the 4 screws to fix the inverter PCB to the inverter PCB assembly.

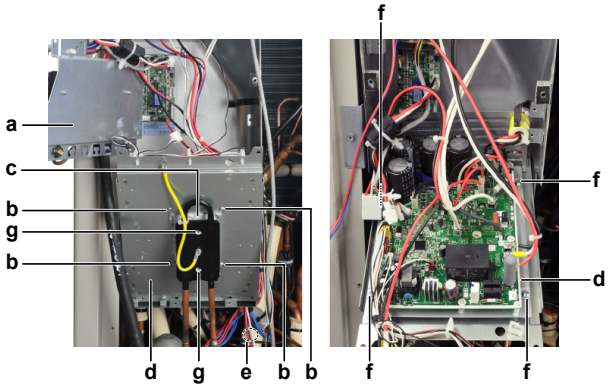

- **a** Power terminal assembly
- **b** Screw (heat sink)
- **c** Heat sink
- **d** Inverter PCB
- **e** Compressor cable
- **f** Screw (inverter PCB)
- **g** Screw (heat sink element)

6 Put the inverter PCB assembly in vertical position.

7 Install the 4 screws that fix the heat sink.

8 Turn the power terminal assembly to the right.

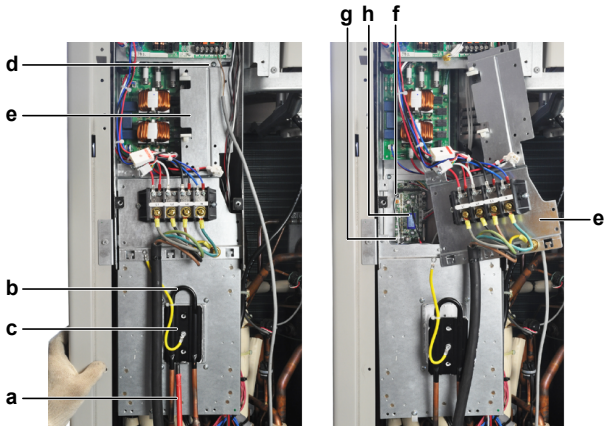

- **a** Flat screwdriver
- **b** Heat pipe
- **c** Heat sink
- **d** Screw
- **e** Power terminal assembly
- **f** Connector X3
- **g** Connector X5
- **h** Fan inverter PCB

9 Connect connectors X3 and X5 to the fan inverter PCB.

10 Move the power terminal assembly to the left.

11 Install the screw to fix the power terminal assembly.

12 Install the heat pipe on the heat sink.

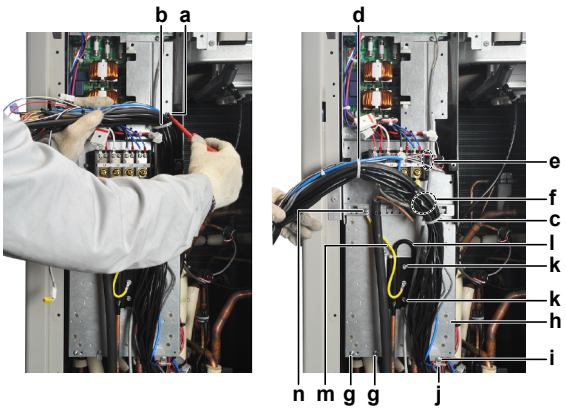

a	Screw (cable clamp)	**h**	Compressor inverter assembly
b	Cable clamp	**i**	Screw (thermistor clamp)
c	Tie wrap	**j**	Thermistor clamp
d	Tie wrap	**k**	Screw (heat pipe)
e	Cables	**l**	Heat pipe
f	Cables	**m**	Ground wire
g	Screw (compressor inverter assy)	**n**	Screw (ground wire)

13 Install the screw to fix the ground wire.

14 Install the 2 screws to fix the heat pipe.

15 Install the screw to fix the thermistor clamp.

16 Install the 2 screws to fix the compressor inverter assembly.

17 Tie the cables together with tie wraps.

18 Install the screw to fix the cable clamp.

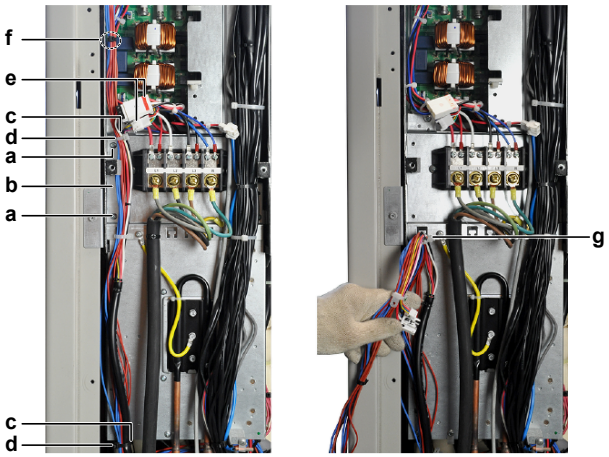

a	Screw (power terminal assy)
b	Power terminal assembly
c	Screw (cable clamp)
d	Cable clamp
e	Connectors X1A and X2A
f	Wiring
g	Tie wrap

19 Install the tie wrap.

20 Connect the wiring to the main board.

21 Connect the fan connectors X1A and X2A.

22 Install the 2 screws to fix the cable clamps.

23 Install the screws to fix the power terminal assembly.

For double fan units

24 Clean the heat sink surface and apply a thin layer of heat sink compound to the heat sink surface.

25 Install the inverter PCB on its correct location.

26 Latch the PCB supports to fix the PCB.

27 Install and tighten the 2 screws to fix the inverter PCB to the heat sink plate.

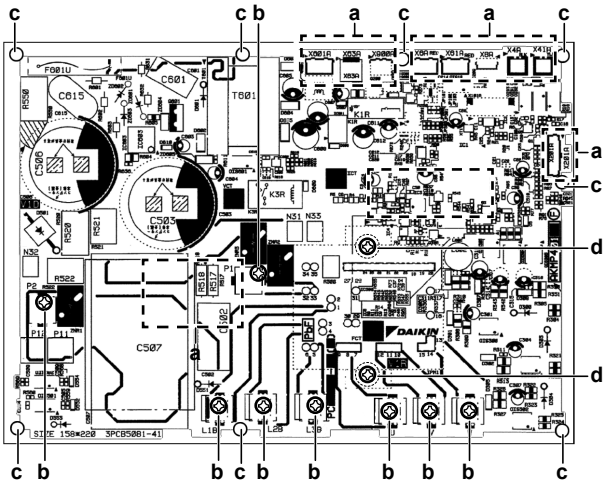

a Connector
b Screw connection
c PCB support
d Screw (heat sink)

28 Install the 4 screws that fix the heat sink to the switch box.

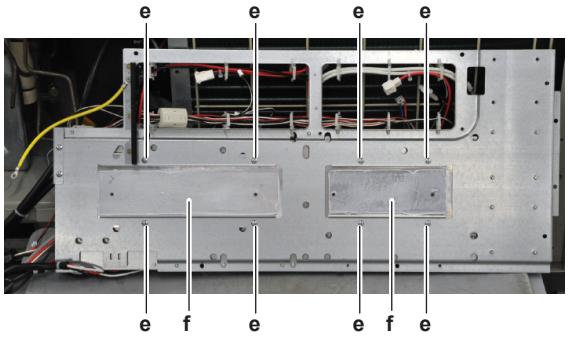

e Screw
f Heat sink

29 Connect all connectors to the inverter PCB.

30 Connect the wires to the screw connections on the inverter PCB.

Is the problem solved?	Action
Yes	No further actions required.
No	Return to "3.8.1 Checking procedures" [▸ 225] of the inverter PCB and continue with the next procedure.

3.9 Main PCB

3.9.1 Checking procedures

> **INFORMATION**
> It is recommended to perform the checks in the listed order.

To perform a power check of the main PCB

Prerequisite: Stop the unit operation via the central controller.

Prerequisite: Turn OFF the respective circuit breaker.

Prerequisite: Remove the required plate work, see "3.13 Plate work" [▶ 270].

1. Turn ON the power of the unit.
2. Measure the voltage between the following wires on connector X1A of the main PCB. All measurements MUST be 230 V AC±10%.
   - L3 (pin 1)–N (pin 5)
   - L1 (pin 3)–N (pin 5)

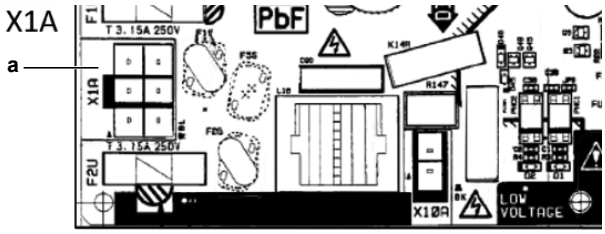

a Connector X1A

Does the main PCB receive power?	Action
Yes	Return to "3.9.1 Checking procedures" [▶ 243] of the main PCB and continue with the next procedure.
No	Continue with the next step.

3. Check the power supply to the unit, see "4.1.1 Checking procedures" [▶ 299].

Does the unit receive power?	Action
Yes	Correct the wiring from the main power supply terminal to the main PCB, see "3.9.2 Repair procedures" [▶ 246].
No	Adjust the power supply to the unit, see "4.1.2 Repair procedures" [▶ 304].

To check the power supply to the optional PCB

Prerequisite: First perform all earlier checks of the main PCB, see "3.9.1 Checking procedures" [▶ 243].

1. Turn ON the power of the unit.
2. Measure the voltage on connector X37A of the main PCB. The measurement MUST be 16 V DC.

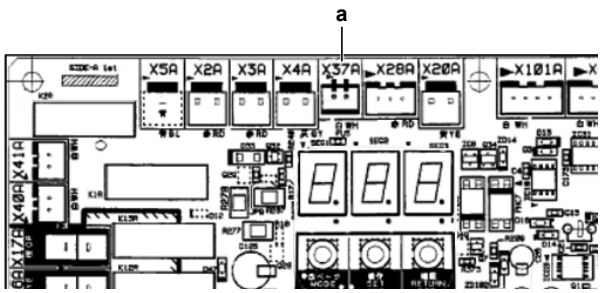

a Connector X37A

Is the measurement correct?	Action
Yes	Return to "3.9.1 Checking procedures" [▸ 243] of the main PCB and continue with the next procedure.
No	Replace the main PCB, see "3.9.2 Repair procedures" [▸ 246].

To check the HAP LED of the main PCB

Prerequisite: First perform a power check of the main PCB, see "3.9.1 Checking procedures" [▸ 243].

1 Locate the HAP LED on the main PCB.

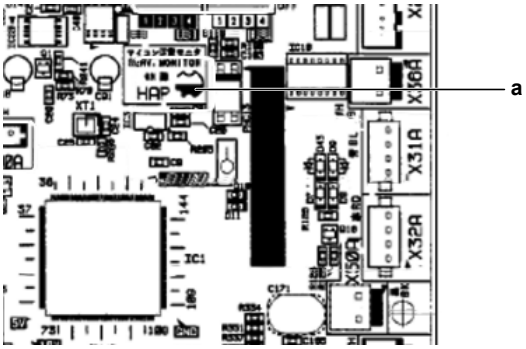

a HAP LED

> **INFORMATION**
>
> Make sure the correct software is available on the PCB. If NOT, update using the updater tool.

Does the HAP LED blink in regular intervals (approximately 1 Hz)?	Action
Yes	Return to "3.9.1 Checking procedures" [▸ 243] of the main PCB and continue with the next procedure.
No	Replace the main PCB, "3.9.2 Repair procedures" [▸ 246].

To check if the correct spare part is installed

1 First perform all earlier checks of the main PCB, see "3.9.1 Checking procedures" [▸ 243].

2 If a spare part main PCB is installed in your unit, check that it is the correct one by performing the procedure described below.

3 Make sure the DIP switches of the main PCB are set correctly, see "3.9.2 Repair procedures" [▶ 246].

4 Visit your local spare parts webbank.

5 Enter the model name of your unit and check if the installed spare part number corresponds with the spare part number indicated in the webbank.

Is the correct spare part for the main PCB installed?	Action
Yes	Return to "3.9.1 Checking procedures" [▶ 243] of the main PCB and continue with the next procedure.
No	Replace the main PCB, "3.9.2 Repair procedures" [▶ 246].

To check the wiring of the main PCB

Prerequisite: First perform all earlier checks of the main PCB, see "3.9.1 Checking procedures" [▶ 243].

Prerequisite: Stop the unit operation via the central controller.

Prerequisite: Turn OFF the respective circuit breaker.

1 Check that all wires are properly connected and that all connectors are fully plugged-in.

2 Check that no connectors or wires are damaged.

3 Check that the wiring corresponds with the wiring diagram, see "6.2 Wiring diagram" [▶ 325].

4 Check that the bridge connector X4A is plugged in, see "6.2 Wiring diagram" [▶ 325].

INFORMATION

Correct the wiring as needed.

Is the problem solved?	Action
Yes	No further actions required.
No	Return to "3.9.1 Checking procedures" [▶ 243] of the main PCB and continue with the next procedure.

To check the fuses of the main PCB

Prerequisite: First perform all earlier checks of the main PCB, see "3.9.1 Checking procedures" [▶ 243].

1 Measure the continuity of the fuse. If no continuity is measured, the fuse has blown.

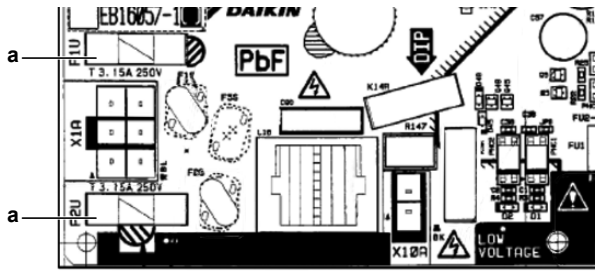

a Fuse

Any blown fuses on the main PCB?	Action
Yes	Replace the blown fuse(s), see "3.9.2 Repair procedures." [▸ 246]
No	Return to "3.9.1 Checking procedures" [▸ 243] of the main PCB and continue with the next procedure.

To check the varistors of the main PCB

Prerequisite: First perform all earlier checks of the main PCB, see "3.9.1 Checking procedures" [▸ 243].

1 Measure the resistance of the varistor. If the reading is nearly infinite, the varistor is still good.

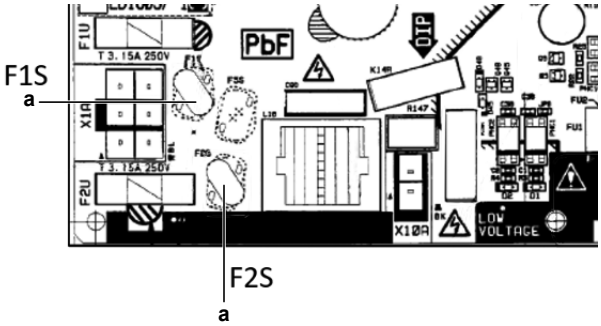

a Varistors

Any broken varistors on the main PCB?	Action
Yes	Replace the main PCB, see "3.9.2 Repair procedures." [▸ 246]
No	Return to "3.9.1 Checking procedures" [▸ 243] of the main PCB and continue with the next procedure.

Problem solved?

After all checking procedures listed above have been performed:

Is the problem solved?	Action
Yes	No further actions required.
No	Return to the troubleshooting of the specific error and continue with the next procedure.

3.9.2 Repair procedures

To correct the wiring from the main power supply terminal to the main PCB

1 Correct the wiring from the main power supply terminal to the PCB, see "6.2 Wiring diagram" [▸ 325].

Is the problem solved?	Action
Yes	No further actions required.
No	Return to "3.9.1 Checking procedures" [▸ 243] of the main PCB and continue with the next procedure.

To remove the main PCB

Prerequisite: Stop the unit operation via the central controller.

Prerequisite: Turn OFF the respective circuit breaker.

1 Remove the required plate work, see "3.13 Plate work" [▶ 270].

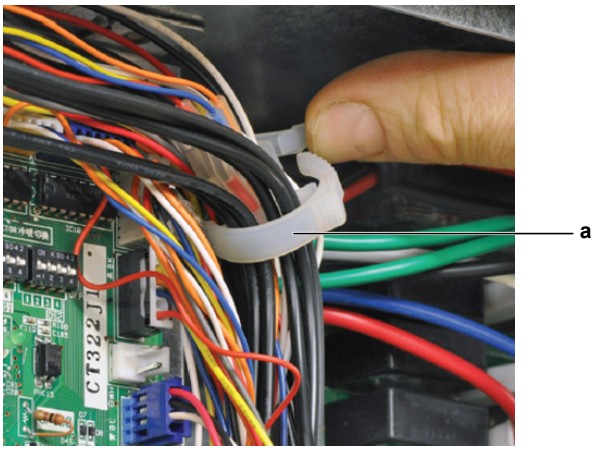

a Cable clamp

2 Unlatch the cable clamp at the top right corner of the main PCB to facilitate the removal of the PCB.

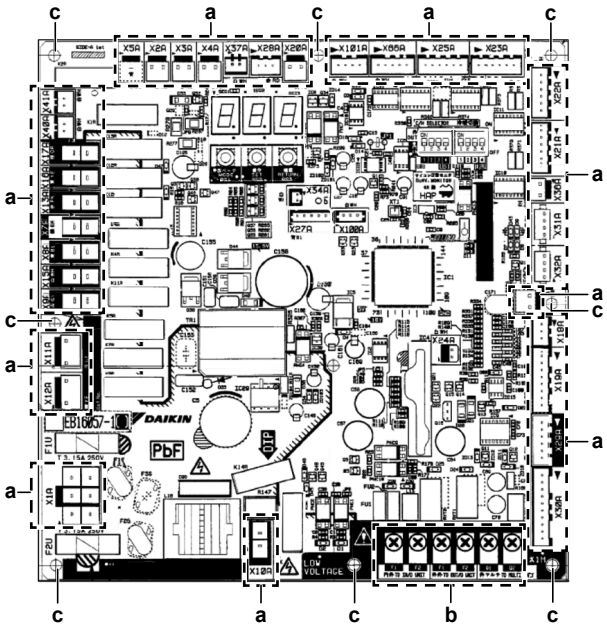

a Connector
b Wire terminal
c PCB support

3 Disconnect all connectors from the main PCB assembly.

4 Note the field wiring on X1M transmission field wiring terminals.

5 Disconnect wiring connections on wiring terminals.

6 Carefully pull the PCB at the side and unlatch the PCB supports one by one using a small pair of pliers.

7 Remove the main PCB.

8 To install the new outdoor unit main PCB, see "3.9.2 Repair procedures" [▶ 246].

To install the main PCB

1 Install the main PCB on its correct location.

2 Latch the PCB supports to fix the PCB.

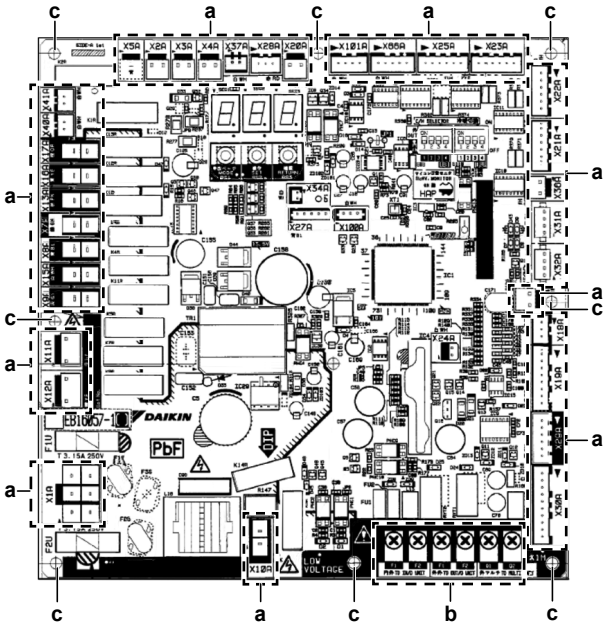

a Connector
b Wire terminal
c PCB support

3 Connect all connectors to the main PCB assembly.

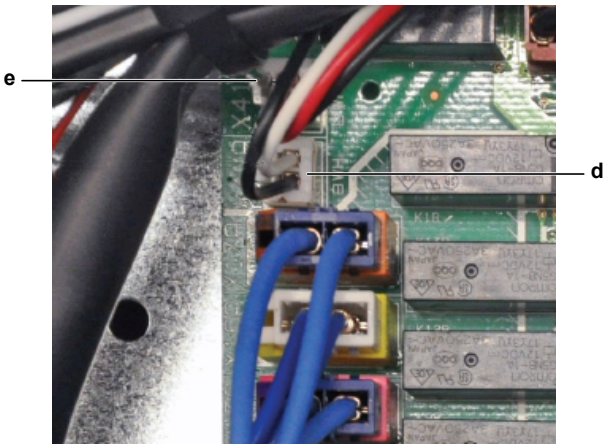

d Connector X40A
e Connector X41A

4 Pay attention to connectors X40A and X41A when re-connecting wiring: the black/white wiring should be connected to X40A and the red/black wiring should be connected to X41A.

5 Connect all the wire terminals.

6 When installing a new main PCB , it needs to be defined for capacity. Otherwise, PJ error is generated.

7 When installing a new main PCB, set the dipswitch settings accordingly to the model. See "3.9.2 Repair procedures" [▸ 246].

Is the problem solved?	Action
Yes	No further actions required.

Is the problem solved?	Action
No	Return to "3.9.1 Checking procedures" [▶ 243] of the main PCB and continue with the next procedure.

To set the DIP switches of the spare part main PCB

If a spare part main PCB is installed in your unit, the DIP switches need to be set. By default (factory settings) all switches are in off position.

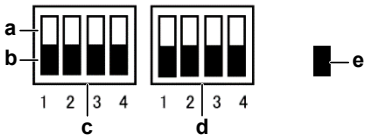

- **a** ON position
- **b** OFF position
- **c** DS1
- **e** DS2
- **e** Shows the position of a switch

1. Shut the power off.
2. Position the DIP switches for your particular model as shown in the table below.

Applicable models	Position of DIP switches	
RXYQ8 RXYTQ8 RXYQQ8~20	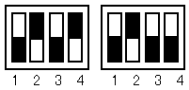	DS1-2, DS1-4 and DS2-2 are set as ON.
RXYQ10 RXYTQ10 RXYQQ10		DS1-2, DS1-4, DS2-1 and DS2-2 are set as ON.
RXYQ12 RXYTQ12 RXYQQ12	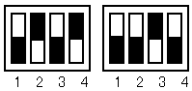	DS1-2, DS1-4 and DS2-3 are set as ON.
RXYQ14 RXYTQ14 RXYQQ14	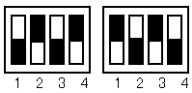	DS1-2, DS1-4, DS2-1 and DS2-3 are set as ON.
RXYQ16 RXYTQ16 RXYQQ16	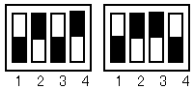	DS1-2, DS1-4, DS2-2 and DS2-3 are set as ON.
RXYQ18 RXYQQ18		DS1-2, DS1-4, DS2-1, DS2-2 and DS2-3 are set as ON.
RXYQ20 RXYQQ20	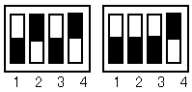	DS1-2, DS1-4 and DS2-4 are set as ON.
RYYQ8	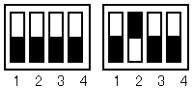	DS2-2 is set as ON.

Applicable models	Position of DIP switches	
RYYQ10	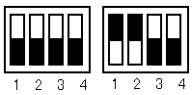	DS2-1 and DS2-2 are set as ON.
RYYQ12	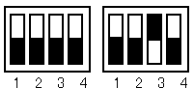	DS2-3 is set as ON.
RYYQ14	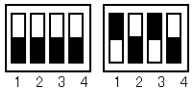	DS2-1 and DS2-3 are set as ON.
RYYQ16	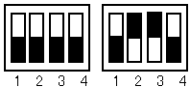	DS2-2 and DS2-3 are set as ON.
RYYQ18	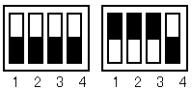	DS2-1, DS2-2 and DS2-3 are set as ON.
RYYQ20	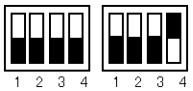	DS2-4 is set as ON.
RYMQ8	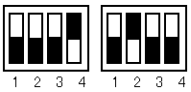	DS1-4 and DS2-2 are set as ON.
RYMQ10	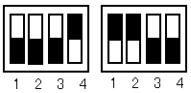	DS1-4, DS2-1 and DS2-2 are set as ON.
RYMQ12	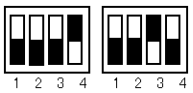	DS1-4 and DS2-3 are set as ON.
RYMQ14	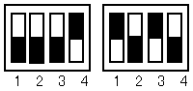	DS1-4, DS2-1 and DS2-3 are set as ON.
RYMQ16	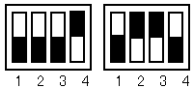	DS1-4, DS2-2 and DS2-3 are set as ON.
RYMQ18	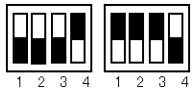	DS1-4, DS2-1, DS2-2 and DS2-3 are set as ON.
RYMQ20	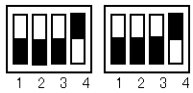	DS1-4 and DS2-4 are set as ON.

(*) For RXYQQ8~20 models it is necessary to judge if an additional parameter setting is required, depending on the indoor unit type:

- All indoor units are R410A type indoor units: no additional setting is required. (2-73=0 by default)
- All indoor units are non-R410A type indoor units: Parameter setting 2-73=1 is required.

INFORMATION

The mix of non-R410A type units together with R410A type units is not possible. Compatible non-R410A type indoor units are restricted, please consult the Data Book on Business Portal for further details.

3 After replacing main PCBA1P , a test run is required. Refer to Installation Manual for Test Run. If test run is not carried out successfully, U3 Error will be triggered.

4 If PJ or UA or U7 Errors are triggered after spare part main PCB A1P replacement, check the position of the switches accordingly. If the error is not solved then consult the related error code for troubleshooting.

Is the problem solved?	Action
Yes	No further actions required.
No	Return to "3.9.1 Checking procedures" [▶ 243] of the main PCB and continue with the next procedure.

To remove a fuse of the main PCB

Prerequisite: Stop the unit operation via the central controller.

Prerequisite: Turn OFF the respective circuit breaker.

Prerequisite: Remove the required plate work, see "3.13 Plate work" [▶ 270].

1 Remove the fuse from the PCB.

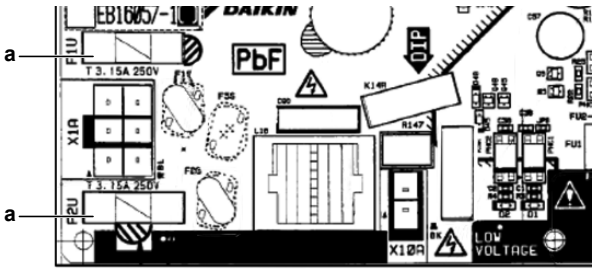

a Fuse

2 To install the fuse on the main PCB, see "3.9.2 Repair procedures" [▶ 246].

To install a fuse on the main PCB

WARNING

For continued protection against risk of fire, replace ONLY with same type and rating of fuse.

1 Install the fuse on the correct location on the PCB.

CAUTION

Make sure the fuse is plugged-in correctly (contact with the fuse holder).

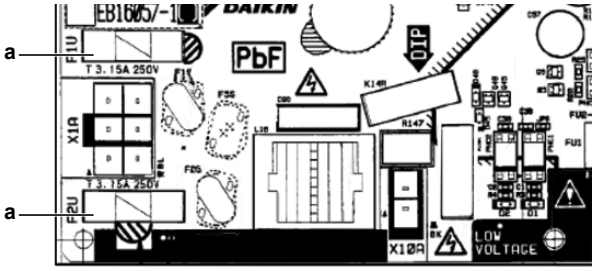

a Fuse

Is the problem solved?	Action
Yes	No further actions required.
No	Return to "3.9.1 Checking procedures" [▸ 243] of the main PCB and continue with the next procedure.

3.10 Noise filter PCB

3.10.1 Checking procedures

INFORMATION

It is recommended to perform the checks in the listed order.

To perform a power check of the noise filter PCB

Prerequisite: Stop the unit operation via the central controller.

Prerequisite: Turn OFF the respective circuit breaker.

Prerequisite: Remove the required plate work, see "3.13 Plate work" [▸ 270].

Prerequisite: Access the switch box, see "3.13 Plate work" [▸ 270].

1 Turn ON the power of the unit.

2 Measure the voltage between the following wires of the noise filter PCB on the location shown below. All measurements MUST be 400 V AC.

- L1A–L2A
- L1A–L3A
- L2A–L3A

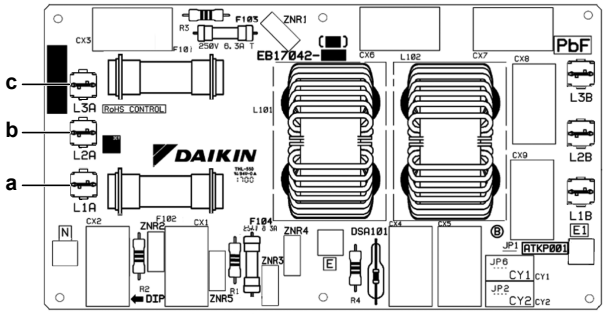

a L1A
b L2A
c L3A

Is the measured voltage on the PCB correct?	Action
Yes	Return to "3.10.1 Checking procedures" [▸ 252] procedures of the PCB and continue with the next procedure.
No	Continue with the next step.

3 Check the power supply to the unit, see "4.1.1 Checking procedures" [▸ 299].

Does the unit receive power?	Action
Yes	Correct the wiring from the main power supply terminal to the noise filter PCB, see "3.10.2 Repair procedures" [▸ 255].
No	Adjust the power supply to the unit, see "4.1.2 Repair procedures" [▸ 304].

To perform an electrical check of the noise filter PCB

Prerequisite: First check the power supply to the noise filter PCB, see "3.10.1 Checking procedures" [▸ 252].

1 Measure the voltage between the following output wires of the noise filter PCB on the location shown below. All measurements MUST be 400 V AC.
   - L1B–L2B
   - L1B–L3B
   - L2B–L3B

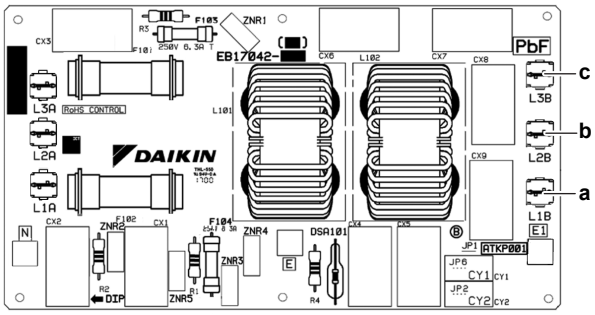

a L1B
b L2B
c L3B

Is the output voltage on the noise filter PCB correct?	Action
Yes	Return to "3.10.1 Checking procedures" [▸ 252] of the noise filter PCB and continue with the next procedure.
No	Replace the noise filter PCB, see "3.10.2 Repair procedures" [▸ 255].

To check if the correct spare part is installed

Prerequisite: First perform all earlier checks of the noise filter PCB, see "3.10.1 Checking procedures" [▸ 252].

1 Visit your local spare parts webbank.

2 Enter the model name of your unit and check if the installed spare part number corresponds with the spare part number indicated in the webbank.

Is the correct spare part for the noise filter PCB installed?	Action
Yes	Return to "3.10.1 Checking procedures" [▸ 252] of the noise filter PCB and continue with the next procedure.

Is the correct spare part for the noise filter PCB installed?	Action
No	Replace the noise filter PCB, see "3.10.2 Repair procedures" [▶ 255].

To check the wiring of the noise filter PCB

Prerequisite: First perform all earlier checks of the noise filter PCB, see "3.10.1 Checking procedures" [▶ 252].

Prerequisite: Stop the unit operation via the central controller.

Prerequisite: Turn OFF the respective circuit breaker.

1. Check that all wires are properly connected and that all connectors are fully plugged-in.
2. Check that no connectors or wires are damaged.
3. Check that the wiring corresponds with the wiring diagram, see "6.2 Wiring diagram" [▶ 325].

INFORMATION

Correct the wiring as needed.

Is the problem solved?	Action
Yes	No further actions required.
No	Return to "3.10.1 Checking procedures" [▶ 252] of the noise filter PCB and continue with the next procedure.

To check the fuses of the noise filter PCB

Prerequisite: First perform all earlier checks of the noise filter PCB, see "3.10.1 Checking procedures" [▶ 252].

1. Measure the continuity of the fuse. If no continuity is measured, the fuse has blown.

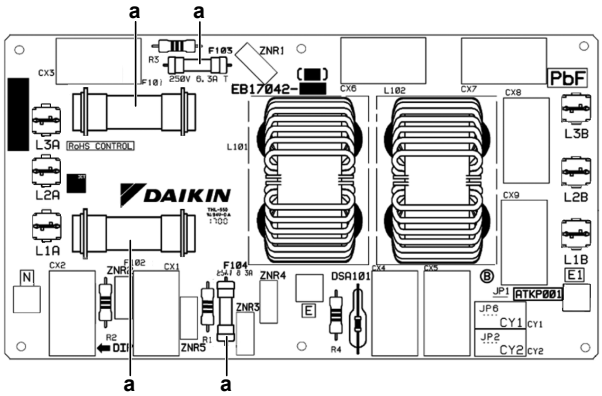

a Fuse

Blown fuse on the noise filter PCB?	Action
Yes	Replace the noise filter PCB, see "3.10.2 Repair procedures" [▶ 255].

Blown fuse on the noise filter PCB?	Action
No	Return to "3.10.1 Checking procedures" [▸ 252] of the noise filter PCB and continue with the next procedure.

Problem solved?

After all checking procedures listed above have been performed:

Is the problem solved?	Action
Yes	No further actions required.
No	Return to the troubleshooting of the specific error and continue with the next procedure.

3.10.2 Repair procedures

To correct the wiring from the main power supply terminal to the noise filter PCB

Prerequisite: Stop the unit operation via the central controller.

Prerequisite: Turn OFF the respective circuit breaker.

Prerequisite: Remove the required plate work, see "3.13 Plate work" [▸ 270].

1. Access the switch box, see "3.13 Plate work" [▸ 270].
2. Make sure that all wires are firmly and correctly connected, see "6.2 Wiring diagram" [▸ 325].
3. Check the continuity of all wires.
4. Replace any damaged or broken wires.

Is the problem solved?	Action
Yes	No further actions required.
No	Return to "3.10.1 Checking procedures" [▸ 252] of the noise filter PCB and continue with the next procedure.

To remove the noise filter PCB

Prerequisite: Stop the unit operation via the central controller.

Prerequisite: Turn OFF the respective circuit breaker.

Prerequisite: Remove the required plate work, see "3.13 Plate work" [▸ 270].

1. Access the switch box, see "3.13 Plate work" [▸ 270].
2. Disconnect all the wires of the noise filter PCB.

INFORMATION

The connectors on the PCB can be screw- or Faston-type, depending on the model.

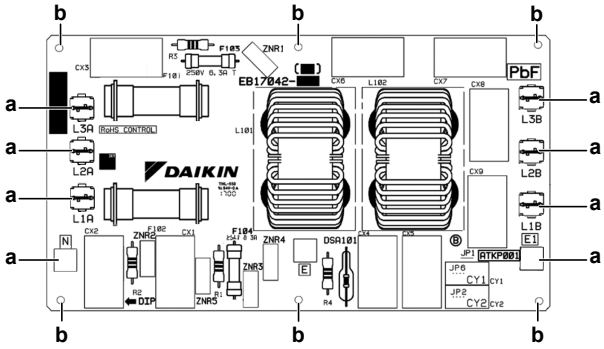

a Connector
b PCB supports

3 Carefully pull the PCB at the side and unlatch the PCB supports one by one using a small pair of pliers.

4 To install the new noise filter PCB, see "3.10.2 Repair procedures" [▶ 255].

To install the noise filter PCB

1 Install the noise filter PCB on its correct location.

2 Latch the PCB supports to fix the noise filter PCB.

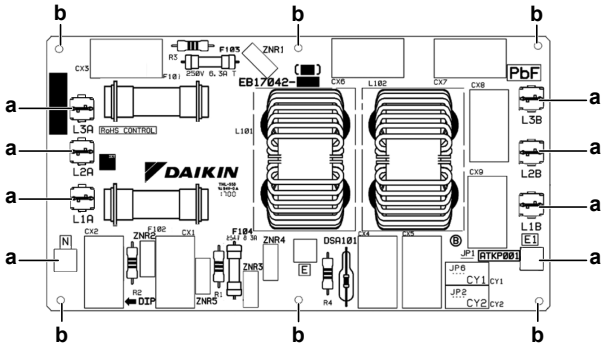

a Connector
b PCB supports

3 Connect all the wires to the connectors of the noise filter PCB.

> **INFORMATION**
> The connectors on the PCB can be screw- or Faston-type, depending on the model.

Is the problem solved?	Action
Yes	No further actions required.
No	Return to "3.10.1 Checking procedures" [▶ 252] of the noise filter PCB and continue with the next procedure.

3.11 Oil return valve

3.11.1 Checking procedures

> **INFORMATION**
> It is recommended to perform the checks in the listed order.

To perform a mechanical check of the oil return valve

Prerequisite: Stop the unit operation via the central controller.

Prerequisite: Turn OFF the respective circuit breaker.

Prerequisite: Remove the required plate work, see "3.13 Plate work" [▶ 270].

1 Verify that the screw is firmly fixing the coil to the valve body.

2 Check if any damage or burst is present.

Is the oil return valve coil firmly fixed and not visually damaged?	Action
Yes	Perform an electrical check of the oil return valve, see "3.11.1 Checking procedures" [▶ 256].
No	Fix or replace the oil return valve coil, see "3.11.2 Repair procedures" [▶ 259].

To perform an electrical check of the oil return valve

Prerequisite: Stop the unit operation via the central controller.

Prerequisite: Turn OFF the respective circuit breaker.

Prerequisite: Remove the required plate work, see "3.13 Plate work" [▶ 270].

1 Unplug the oil return valve connector from the appropriate PCB.

2 Measure the resistance of the oil return valve coil.

Result: The measured value MUST be 2.1 kΩ ± 5%.

Is the measured value correct?	Action
Yes	Continue with the next step.
No	Replace the oil return valve coil, see "3.11.2 Repair procedures" [▶ 259].

For the Y2S valve

3 Turn ON the power using the respective circuit breaker.

4 Turn ON an indoor unit via remote controller or central controller.

5 Measure the voltage on the Y2S valve connection on the PCB.

Result: The measured voltage MUST be 0 V AC. Y2S is NOT energized when discharge superheat <15 K or compressor is OFF.

6 Connect the service monitoring tool to the unit and check the discharge superheat build up. Once discharge superheat >15 K and compressor is running, Y2S is energized.

7 With the Y2S connector connected to the PCB, measure the voltage on the Y2S valve connection of the PCB.

Result: The measured voltage MUST be 230 V AC.

Are the measured voltages correct?	Action
Yes	Perform an operation check of the oil return valve, see "3.11.1 Checking procedures" [▶ 256].
No	Check the main PCB, see "3.9.1 Checking procedures" [▶ 243].

For the Y3S and Y4S valves

8 Turn ON the power using the respective circuit breaker.

9 Turn ON an indoor unit via remote controller or central controller.

10 Measure the voltage on the Y3S or Y4S valve connection on the PCB.

Result: The measured voltage MUST be 0 V AC. Y3S and Y4S are NOT energized when compressor is OFF and the pressure difference between the high and low pressure <0,3 MPa.

11 Connect the service monitoring tool to the unit and check the pressure difference between the high and low pressure. Once the pressure difference between the high and low pressure exceeds 0,3 MPa and the compressor is running, Y3S and Y4S are energized.

12 With the Y3S/Y4S valve connector connected to the PCB, measure the voltage on the Y3S/Y4S valve connection of the PCB.

Result: The measured voltage MUST be 230 V AC.

Are the measured voltages correct?	Action
Yes	Perform an operation check of the oil return valve, see "3.11.1 Checking procedures" [▶ 256].
No	Check the main PCB, see "3.9.1 Checking procedures" [▶ 243].

To perform an operation check of the oil return valve

1 Turn ON the power using the respective circuit breaker.

2 Turn ON an indoor unit via remote controller or central controller.

For the Y2S valve

3 Connect the service monitoring tool to the unit and check the discharge superheat build up. Once discharge superheat >15 K and compressor is running, Y2S is energized.

4 Try to judge the flow just after Y2S is energized (has switched) (See "6.3 Piping diagram" [▶ 330]).

Is the flow correct?	Action
Yes	Oil return valve is OK. Return to the troubleshooting of the specific error and continue with the next procedure.
No	Replace the body of the oil return valve, see "3.11.2 Repair procedures" [▶ 259].

For the Y3S and Y4S valves

5 Connect the service monitoring tool to the unit and check the pressure difference between the high and low pressure. Once the pressure difference between the high and low pressure exceeds 0,3 MPa and the compressor is running, Y3S and Y4S are energized.

6 Check with a contact thermometer if the flow through the oil return valve corresponds with the flow shown in the flow diagram. (See "6.3 Piping diagram" [▶ 330]).

Is the flow correct?	Action
Yes	Oil return valve is OK. Return to the troubleshooting of the specific error and continue with the next procedure.
No	Replace the body of the oil return valve, see "3.11.2 Repair procedures" [▸ 259].

Problem solved?

After all checking procedures listed above have been performed:

Is the problem solved?	Action
Yes	No further actions required.
No	Return to the troubleshooting of the specific error and continue with the next procedure.

3.11.2 Repair procedures

To remove the oil return valve coil

Prerequisite: Stop the unit operation via the central controller.

Prerequisite: Turn OFF the respective circuit breaker.

Prerequisite: Remove the required plate work, see "3.13 Plate work" [▸ 270].

Prerequisite: If needed, remove any parts to create more space for the removal of the oil return valve coil.

1 Remove the screw and remove the oil return valve coil from the oil return valve body.

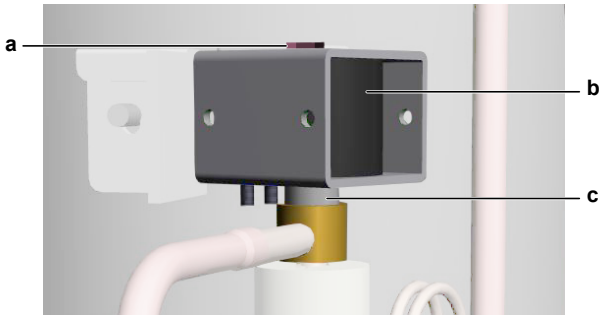

a Screw
b Valve coil
c Valve body

2 Cut all tie straps that fix the oil return valve coil harness.

3 Disconnect the oil return valve coil connector from the appropriate PCB.

4 To install the oil return valve coil, see "3.11.2 Repair procedures" [▸ 259].

To remove the oil return valve body

Prerequisite: Recuperate the refrigerant from the refrigerant circuit, see "4.2.2 Repair procedures" [▸ 311].

1 Remove the oil return valve coil from the oil return valve body, see "3.11.2 Repair procedures" [▸ 259].

2 Using a valve magnet, open the oil return valve.

3 Supply nitrogen to the refrigerant circuit. The nitrogen pressure MUST NOT exceed 0.02 MPa.

4 Wrap a wet rag around the components near the oil return valve pipes. Heat the brazing points of the oil return valve pipes using an oxygen acetylene torch and remove the oil return valve pipes from the refrigerant pipes using pliers.

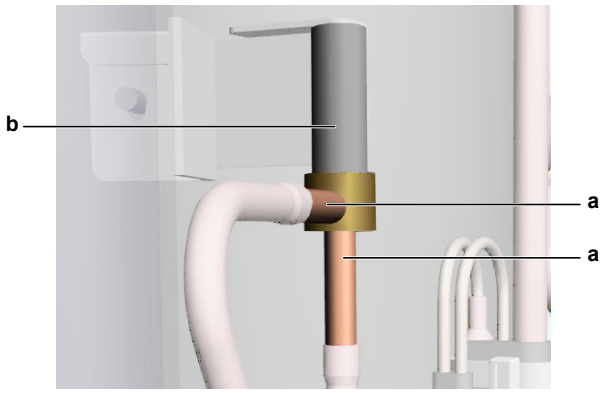

a Oil return valve pipe
b Oil return valve body

5 Stop the nitrogen supply when the piping has cooled down.

6 Remove the oil return valve body.

7 Keep the insulation for re-use.

> **INFORMATION**
> It is ALSO possible to cut the component pipe(s) using a pipe cutter. Make sure to remove the remaining component pipe end(s) from the refrigerant pipes by heating the brazing point(s) of the component pipe(s) using an oxygen acetylene torch.

8 Install plugs or caps on the open pipe ends of the refrigerant piping to avoid dirt or impurities from entering the piping.

9 To install the oil return valve body, see "3.11.2 Repair procedures" [▸ 259].

To install the oil return valve body

1 Remove the plugs or caps from the refrigerant piping and make sure they are clean.

2 Remove the oil return valve coil from the spare part oil return valve body.

3 Install the oil return valve body in the correct location and correctly oriented. Insert the pipe ends in the pipe expansions.

4 Open the oil return valve using a valve magnet.

5 Supply nitrogen to the refrigerant circuit. The nitrogen pressure MUST NOT exceed 0.02 MPa.

6 Wrap a wet rag around the oil return valve body and any other components near the oil return valve and solder the oil return valve pipes to the refrigerant pipes.

> **CAUTION**
> Overheating the valve will damage or destroy it.

7 After soldering is done, stop the nitrogen supply after the component has cooled-down.

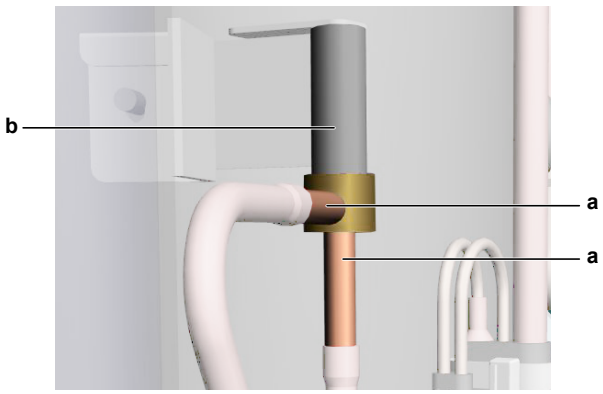

a Oil return valve pipe
b Oil return valve body

8 Install the insulation in the original location.

9 Install the oil return valve coil on the oil return valve body, see "3.11.2 Repair procedures" [▶ 259].

10 Perform a pressure test, see "4.2.1 Checking procedures" [▶ 306].

11 Add refrigerant to the refrigerant circuit, see "4.2.2 Repair procedures" [▶ 311].

To install the oil return valve coil

1 Install the oil return valve coil on the oil return valve body.

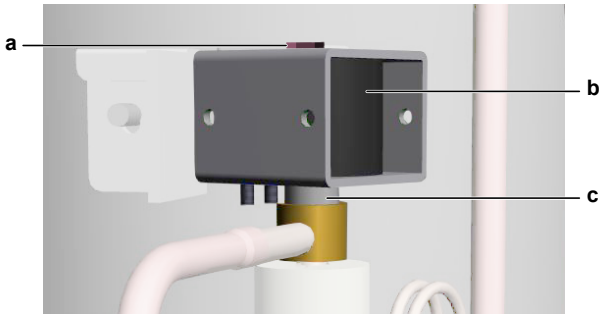

a Screw
b Valve coil
c Valve body

2 Install and tighten the screw to fix the oil return valve coil.

3 Route the oil return valve coil harness towards the appropriate PCB.

4 Connect the oil return valve coil connector to the PCB.

WARNING

When reconnecting a connector to the PCB, make sure to connect it on the correct location and do NOT apply force, as this may damage the connector or connector pins of the PCB.

5 Fix the oil return valve coil harness using new tie straps.

Is the problem solved?	Action
Yes	No further actions required.
No	Return to "3.11.1 Checking procedures" [▶ 256] of the oil return valve and continue with the next procedure.

3.12 Outdoor unit fan motor

3.12.1 Single fan outdoor unit

Checking procedures

> **INFORMATION**
> It is recommended to perform the checks in the listed order.

To perform a mechanical check of the propeller fan blade assembly

Prerequisite: First perform a power transistor check of the fan inverter PCB, see "3.6 Fan inverter PCB" [▸ 210]. If power transistor is OK, proceed as follows:

Prerequisite: Stop the unit operation via the central controller.

Prerequisite: Turn OFF the respective circuit breaker.

Prerequisite: Remove the required plate work, see "3.13 Plate work" [▸ 270].

1. If propeller fan blade touches the bell mouth, check if the fan motor is correctly mounted on its base, see "Repair procedures" [▸ 264].
2. Check the state of the propeller fan blade assembly for damage, deformations and cracks.

Is the propeller fan blade assembly damaged?	Action
Yes	Replace the propeller fan blade assembly, see "Repair procedures" [▸ 264].
No	Perform a mechanical check of the DC fan motor assembly, see "Checking procedures" [▸ 262].

To perform a mechanical check of the DC fan motor assembly

Prerequisite: First perform a mechanical check of the propeller fan blade assembly, see "Checking procedures" [▸ 262].

1. Visually check:
   - For any burnt-out part or wire. If found, replace the fan motor, see "Repair procedures" [▸ 264].
   - That fan motor fixation bolts are correctly installed and fixed. Correct as needed.
2. Manually rotate the fan motor shaft. Check that it rotates smoothly.
3. Check the friction of the DC fan motor shaft bearing.

Is the DC fan motor shaft friction normal?	Action
Yes	Perform an electrical check of the DC fan motor assembly, see "Checking procedures" [▸ 262].
No	Replace the DC fan motor assembly, see "Repair procedures" [▸ 264].

To perform an electrical check of the DC fan motor assembly

1 First perform a mechanical check of the DC fan motor assembly, see "Checking procedures" [▸ 262].

> **INFORMATION**
> Check the DC fan motor power supply (voltage) circuit on the PCB.

2 Turn ON the power of the unit.

3 Activate `Cooling` or `Heating` operation via the Cool/Heat master user interface.

4 Check the functioning of the outdoor unit fan.

Outdoor unit fan ...	Action
Rotates continuously (without interruption)	DC fan motor assembly is OK. Return to the troubleshooting of the specific error and continue with the next procedure.
Does not rotate or rotates for a short time	Continue with the next step.

5 Stop the unit operation via the central controller.

6 Turn OFF the respective circuit breaker.

> **DANGER: RISK OF ELECTROCUTION**
> Confirm the rectifier voltage is below 10 V DC before proceeding, see "To prevent electrical hazards" [▸ 299].

7 Check that the DC fan motor connector X1A is properly connected to the PCB.

8 Unplug the DC fan motor connector and measure the resistance between the pins 1–2, 1–3, and 2–3 of the DC fan motor connector.

Result: All measurements MUST be 8.27 Ω±5% at 20°C.

> **INFORMATION**
> Winding resistance values above are given for reference. You should NOT be reading a value in kΩ or a short-circuit. Make sure that the propeller fan blade does NOT rotate, as this could affect resistance measurements.

9 Set the Megger voltage to 500 V DC or 1000 V DC.

10 Measure the insulation resistance for the motor terminals. Measurements between each phase and fan motor body (e.g. axle) MUST be >1000 MΩ.

Are the measured resistance values correct?	Action
Yes	Perform a check of the fan inverter PCB, see "Checking procedures" [▸ 210].
No	Replace the DC fan motor, see "Repair procedures" [▸ 264].

Problem solved?

After all checking procedures listed above have been performed:

Is the problem solved?	Action
Yes	No further actions required.

Is the problem solved?	Action
No	Return to the troubleshooting of the specific error and continue with the next procedure.

Repair procedures

To remove the propeller fan blade assembly

Prerequisite: Stop the unit operation via the central controller.

Prerequisite: Turn OFF the respective circuit breaker.

1 Remove the required plate work, see "3.13 Plate work" [▸ 270].

2 Loosen and remove the screw using an Allen key.

3 Remove the axle cover.

4 Pull the propeller fan blade from the fan motor axle.

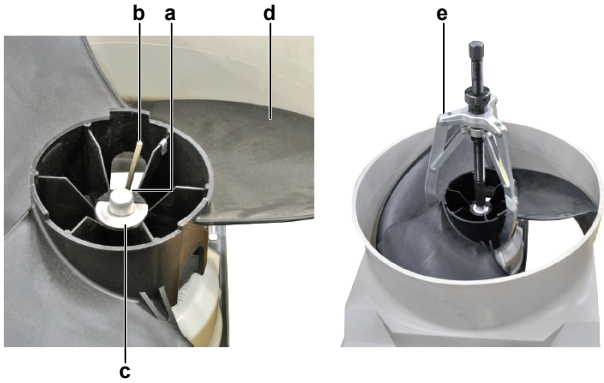

a Screw
b Allen key
c Axle cover
d Propeller fan blade assembly
e Pulley remover

INFORMATION

Use a pulley remover if the propeller cannot be removed manually.

5 To install the propeller fan blade assembly, see "Repair procedures" [▸ 264].

To remove the DC fan motor assembly

1 Remove the propeller fan blade assembly from the DC fan motor assembly, see "Repair procedures" [▸ 264].

DANGER: RISK OF ELECTROCUTION

Confirm the rectifier voltage is below 10 V DC before proceeding, see "To prevent electrical hazards" [▸ 299].

2 Disconnect the DC fan motor connector from the fan inverter PCB.

3 Unlock the ferrite bead.

4 Cut the tie strap.

5 Detach the DC fan motor cable.

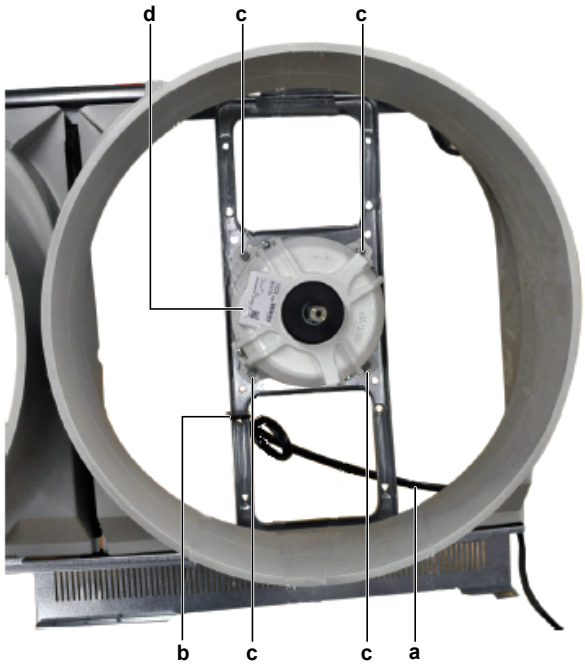

a Fan motor cable
b Tie wrap
c Screw
d Fan motor

6. Remove the 4 screws that fix the DC fan motor assembly.
7. Remove the DC fan motor assembly from the unit.
8. To install the DC fan motor assembly, see "Repair procedures" [▸ 264].

To install the DC fan motor assembly

1. Install the DC fan motor assembly in the correct location.
2. Fix the DC fan motor assembly to the unit by tightening the screws.
3. Route the DC fan motor cable.
4. Attach the DC fan motor cable.
5. Install a new tie strap to fix the DC fan motor cable.
6. Connect the DC fan motor connector to the connector on the fan inverter PCB.
7. Lock the ferrite bead.
8. Install the propeller fan blade assembly, see "Repair procedures" [▸ 264].

To install the propeller fan blade assembly

1. Install the propeller fan blade assembly on the DC fan motor assembly.

> **CAUTION**
> Do NOT install a damaged propeller fan blade assembly.

2. Install the axle cover.
3. Install and tighten the screw using an Allen key to fix the propeller fan blade assembly.

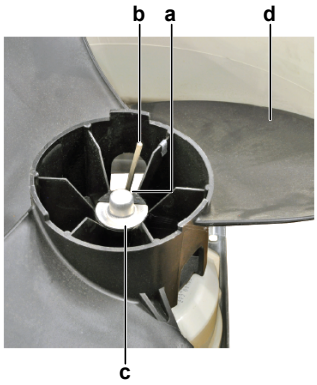

a Screw
b Allen key
c Axle cover
d Propeller fan blade assembly

Is the problem solved?	Action
Yes	No further actions required.
No	Return to "Checking procedures" [▸ 262] of the outdoor unit fan motor and continue with the next procedure.

3.12.2 Double fan outdoor unit

> **INFORMATION**
> See "6.4 Component overview" [▸ 355] for the correct location of DC fan motors M1F and M2F.

Checking procedures

> **INFORMATION**
> It is recommended to perform the checks in the listed order.

To perform a mechanical check of the propeller fan blade assemblies

Prerequisite: Stop the unit operation via the central controller.

Prerequisite: Turn OFF the respective circuit breaker.

Prerequisite: Remove the required plate work, see "3.13 Plate work" [▸ 270].

1. If propeller fan blade touches the bell mounth, check if the fan motor is correctly mounted on its base, see "Repair procedures" [▸ 268].
2. Check the state of the propeller fan blade assemblies for damage, deformations and cracks.

One or both propeller fan blade assemblies are damaged?	Action
Yes	Replace the damaged propeller fan blade assembly, see "Repair procedures" [▸ 268].
No	Perform a mechanical check of the DC fan motor assembly, see "Checking procedures" [▸ 266].

To perform a mechanical check of the DC fan motor assembly

Prerequisite: First perform a mechanical check of the propeller fan blade assembly, see "Checking procedures" [▶ 266].

1 Visually check:
   - For any burnt-out part or wire. If found, replace the fan motor, see "Repair procedures" [▶ 268].
   - That fan motor fixation bolts are correctly installed and fixed. Correct as needed.

2 Manually rotate the fan motor shaft. Check that it rotates smoothly.

3 Check the friction of the DC fan motor shaft bearing.

Is the DC fan motor shaft friction normal?	Action
Yes	Perform an electrical check of the DC fan motor assembly, see "Checking procedures" [▶ 266].
No	Replace the DC fan motor assembly, see "Repair procedures" [▶ 268].

To perform an electrical check of the DC fan motor assembly

1 First perform a mechanical check of both DC fan motor assemblies, see "Checking procedures" [▶ 266].

> **INFORMATION**
> Check the DC fan motor power supply (voltage) circuit on the PCB.

2 Turn ON the power of the unit.

3 Activate `Cooling` or `Heating` operation via the Cool/Heat master user interface.

4 Check the functioning of the outdoor unit fan.

Outdoor unit fan ...	Action
Rotates continuously (without interruption)	DC fan motor assembly is OK. Return to the troubleshooting of the specific error and continue with the next procedure.
Does not rotate or rotates for a short time	Continue with the next step.

5 Stop the unit via the central controller.

6 Turn OFF the respective circuit breaker.

> **DANGER: RISK OF ELECTROCUTION**
> Confirm the rectifier voltage is below 10 V DC before proceeding, see "To prevent electrical hazards" [▶ 299].

7 Check that the DC fan motor connectors (X1A on A4P for M1F and X1A on A7P for M2F) are properly connected to the PCB.

8 Unplug the DC fan motor connectors X1A of both fans and measure the resistance between the pins 1–2, 1–3, and 2–3 of the DC fan motor connectors.

   Result: All measurements MUST be 4.44°Ω±5% at 20°C.

INFORMATION

Winding resistance values above are given for reference. You should NOT be reading a value in kΩ or a short-circuit. Make sure that the propeller fan blade does NOT rotate, as this could affect resistance measurements.

9 Set the Megger voltage to 500 V DC or 1000 V DC.

10 Measure the insulation resistance for the motor terminals. Measurements between each phase and fan motor body (e.g. axle) MUST be >1000 MΩ.

Are the measured resistance values correct?	Action
Yes	Perform a check of the fan inverter PCB, see "Checking procedures" [▶ 216].
No	Replace the DC fan motor assembly, see "Repair procedures" [▶ 268].

Problem solved?

After all checking procedures listed above have been performed:

Is the problem solved?	Action
Yes	No further actions required.
No	Return to the troubleshooting of the specific error and continue with the next procedure.

Repair procedures

To remove the propeller fan blade assembly

Prerequisite: Stop the unit operation via the central controller.

Prerequisite: Turn OFF the respective circuit breaker.

1 Remove the required plate work, see "3.13 Plate work" [▶ 270].

2 Loosen and remove the screw using an Allen key.

3 Remove the axle cover.

4 Pull the propeller fan blade from the fan motor axle.

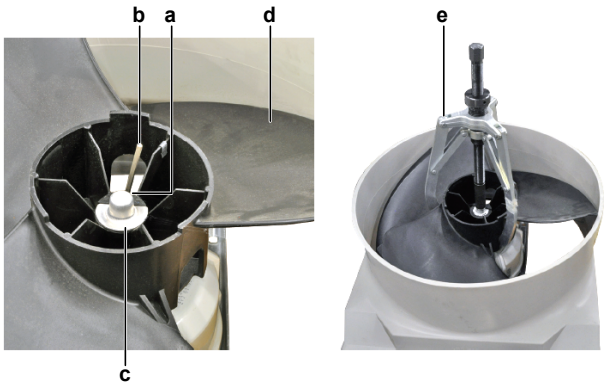

a Screw
b Allen key
c Axle cover
d Propeller fan blade assembly
e Pulley remover

> **INFORMATION**
> Use a pulley remover if the propeller cannot be removed manually.

5 To install the propeller fan blade assembly, see "Repair procedures" [▶ 268].

To remove the DC fan motor assembly

1 Remove the propeller fan blade assembly from the DC fan motor assembly, see "Repair procedures" [▶ 268].
2 Remove the required plate work, see "3.13 Plate work" [▶ 270].
3 Disconnect the DC fan motor connector from the fan inverter PCB.
4 Unlock the ferrite bead.
5 Cut the tie strap.
6 Detach the DC fan motor cable.

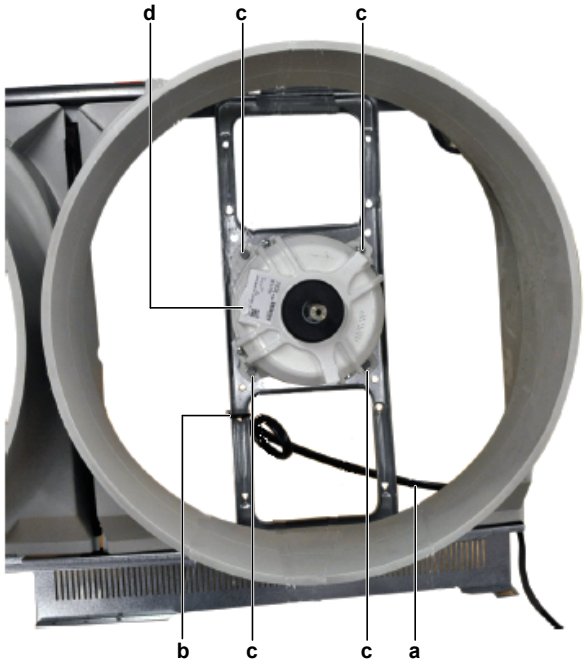

a Fan motor cable
b Tie wrap
c Screw
d Fan motor

7 Remove the 4 screws that fix the DC fan motor assembly.
8 Remove the DC fan motor assembly from the unit.
9 To install the DC fan motor assembly, see "Repair procedures" [▶ 268].

To install the DC fan motor assembly

1 Install the DC fan motor assembly in the correct location.
2 Install and tighten the 4 screws.
3 Route the DC fan motor cable.
4 Attach the DC fan motor cable.
5 Install a new tie strap to fix the DC fan motor cable.
6 Connect the DC fan motor connector to the connector on the fan inverter PCB.
7 Lock the ferrite bead.
8 Install the propeller fan blade assembly, see "Repair procedures" [▶ 268].

9 Install the plate work of the outdoor unit, see "3.13 Plate work" [▶ 270].

To install the propeller fan blade assembly

1 Install the propeller fan blade assembly on the DC fan motor assembly.

> **CAUTION**
> Do NOT install a damaged propeller fan blade assembly.

2 Install the axle cover.

3 Install and tighten the screw using an Allen key to fix the propeller fan blade assembly.

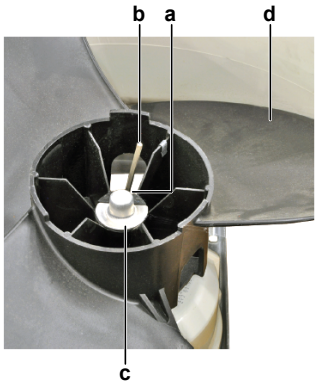

a Screw
b Allen key
c Axle cover
d Propeller fan blade assembly

Is the problem solved?	Action
Yes	No further actions required.
No	Return to "Checking procedures" [▶ 266] of the outdoor unit fan motor and continue with the next procedure.

3.13 Plate work

3.13.1 To access the switch box on single fan units

Prerequisite: Stop the unit operation via the central controller.

Prerequisite: Turn OFF the respective circuit breaker.

1 Remove the required plate work, see "3.13 Plate work" [▶ 270].

> **DANGER: RISK OF ELECTROCUTION**
> Confirm the rectifier voltage is below 10 V DC before proceeding, see "To prevent electrical hazards" [▶ 299].

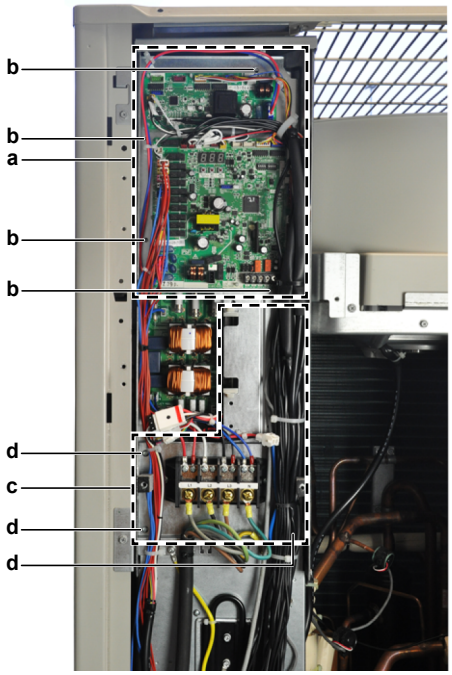

a Main PCB
b Screw (main PCB assy)
c Power supply terminal assembly
d Screw (power supply terminal assy)

2 Remove the 4 screws that fix the main PCB assembly.

3 Remove the 3 screws that fix the power supply terminal assembly.

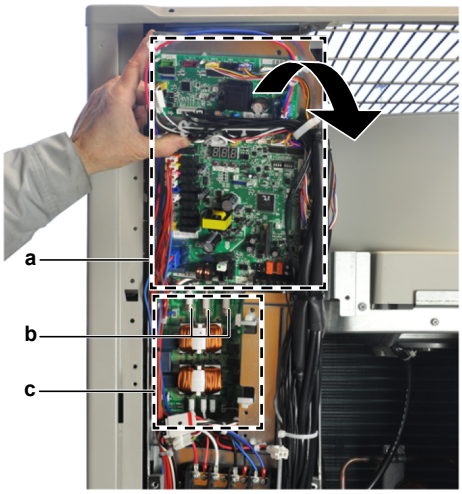

a Main PCB
b Power input wiring
c Noise filter PCB

4 Slightly tilt the main PCB assembly to access the power input wiring on the noise filter PCB.

5 Remove the power input wiring from the noise filter PCB.

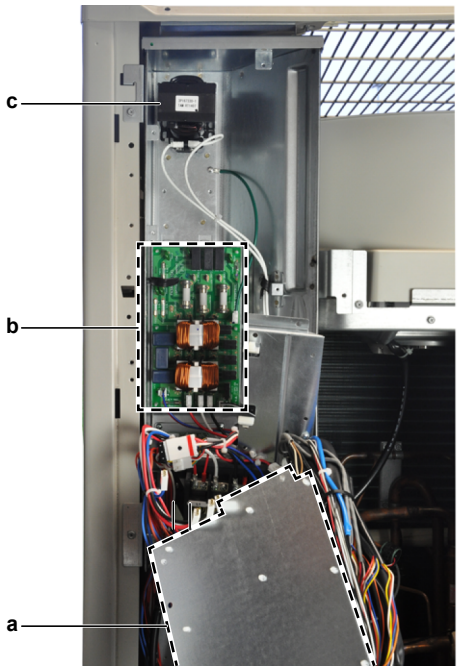

a Main PCB
b Noise filter PCB
c Reactor

6 Completely tilt the main PCB assembly to get full access to the noise filter PCB and the reactor.

3.13.2 To access the switch box on double fan units

Prerequisite: Stop the unit operation via the central controller.

Prerequisite: Turn OFF the respective circuit breaker.

1 Remove the required plate work, see "3.13 Plate work" [▶ 270].

> **DANGER: RISK OF ELECTROCUTION**
>
> Confirm the rectifier voltage is below 10 V DC before proceeding, see "To prevent electrical hazards" [▶ 299].

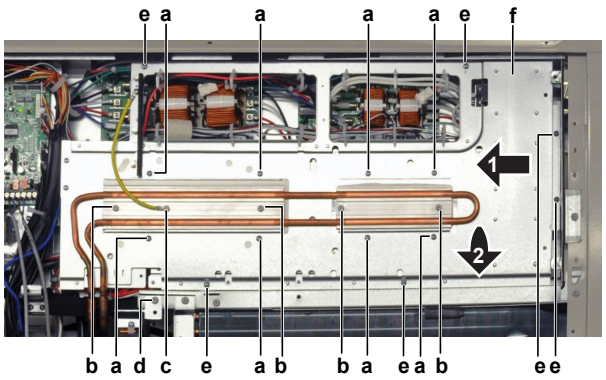

a Screw (do NOT loosen)
b Screw (heat sink)
c Short screw (grounding wire)
d Screw (thermistor mounting bracket)
e Screw (inverter mounting plate)
f Inverter mounting plate

2 Do NOT loosen the screws that fix the inverter PCB's at this step. These screws need only be removed when replacing an inverter PCB.

3 Loosen and remove the 4 screws that fix the heat sinks.

4 Loosen and remove the short screw that fixes the grounding wire to the heat sinks.

5 Loosen and remove the screw that fixes the thermistor R1T mounting bracket.

6 Using a screwdriver, carefully separate both heat sinks from the inverter PCB’s.

WARNING

Thermal grease is applied to the heat sinks. Use gloves when separating the heat sinks from the inverter boards.

7 Loosen and remove the 6 screws that fix the inverter mounting plate.

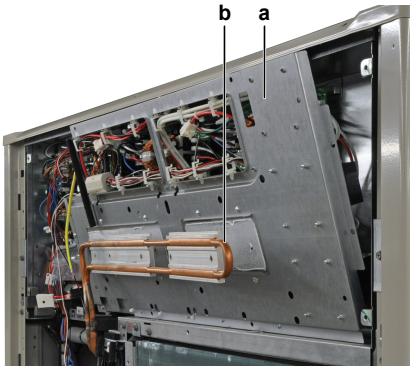

a Inverter mounting plate
b Liquid cooling piping

8 Carefully pull the inverter mounting plate to the front and tilt it. Pay attention to the liquid cooling piping.

9 Disconnect the necessary wiring to have access to noise filter PCB's, the reactors and - on the rear side of the inverter mounting plate - the inverter PCB's and fan inverter PCB's.

3.13.3 To remove the plate work on single fan units

Prerequisite: Stop the unit operation via the central controller.

1 Turn OFF the respective circuit breaker.

To remove the service plate

a Screw
b Service plate

2 Loosen and remove the 2 screws that fix the service plate assembly.

3 Remove the service plate assembly from the unit.

To remove the upper front plate

a Screw
b Upper front plate

4 Loosen and remove the 7 screws that fix the upper front plate assembly.

5 Lift the upper front plate assembly and remove it from the unit.

To remove the front plate

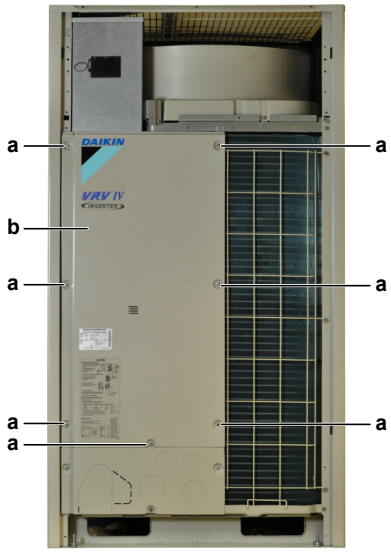

a Screw
b Front plate

6 Loosen and remove the 7 screws that fix the front plate assembly.

7 Lift the front plate assembly and remove it from the unit.

To remove the switch box cover

DANGER: RISK OF ELECTROCUTION

Wait for at least 10 minutes after the circuit breaker has been turned OFF, to be sure the rectifier voltage is below 10 V DC before proceeding.

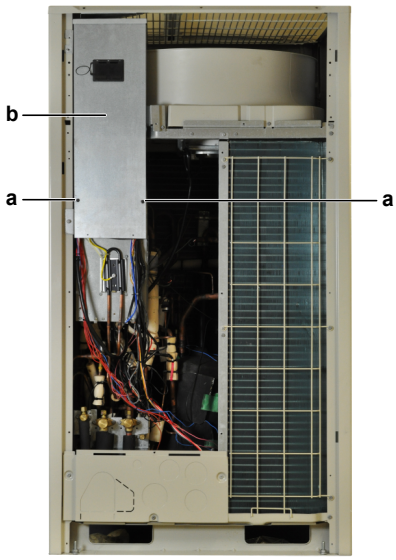

a Screw
b Switch box cover

8 Loosen and remove the 2 screws that fix the switchbox cover.

9 Remove the switchbox cover from the unit.

To remove the lower front plate

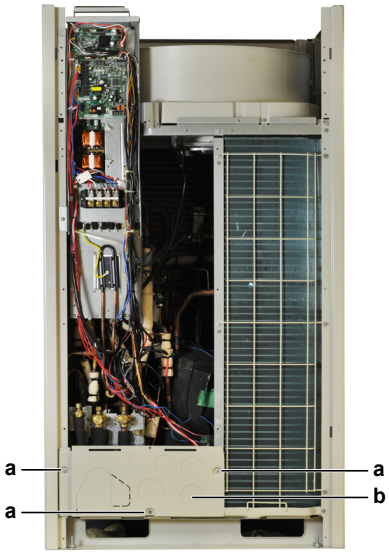

a Screw
b Lower front plate

10 Loosen and remove the 3 screws that fix the lower front plate assembly.

11 Lift the lower front plate assembly and remove it from the unit.

To remove the side plate

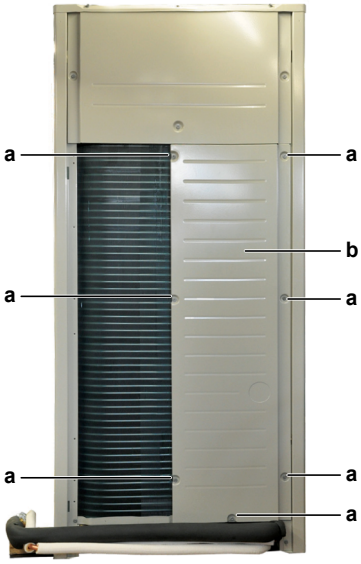

a Screw
b Side plate

12 Loosen and remove the 7 screws that fix the side plate assembly.

13 Lift the side plate assembly and remove it from the unit.

To remove the upper side plate

a Screw
b Upper side plate

14 Loosen and remove the 6 screws that fix the upper side plate assembly.

15 Lift the upper side plate assembly and remove it from the unit.

To remove the top plate

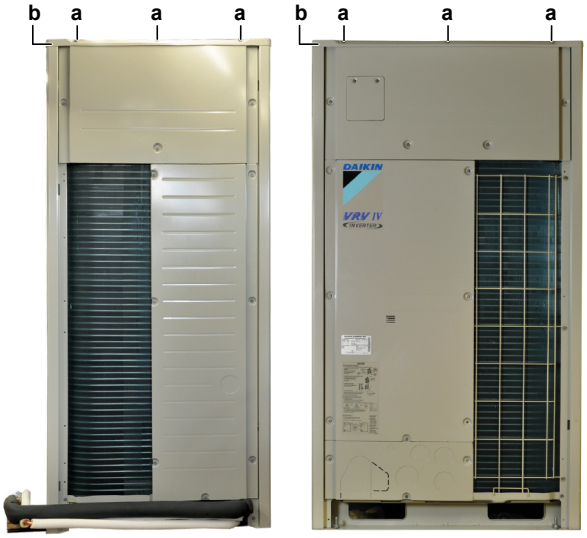

a Screw
b Top plate

16 Loosen and remove the 12 screws that fix the top plate assembly.

17 Remove the top plate from the unit.

3.13.4 To remove the plate work on double fan units

Prerequisite: Stop the unit operation via the central controller.

1 Turn OFF the respective circuit breaker.

To remove the service plate

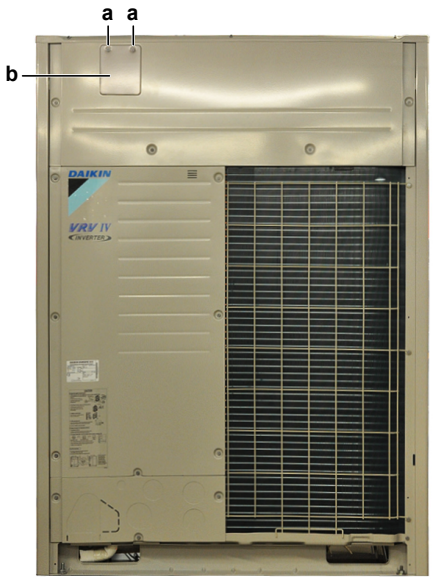

a Screw
b Service plate

2 Loosen and remove the 2 screws that fix the service plate assembly.

3 Remove the service plate assembly from the unit.

To remove the upper front plate

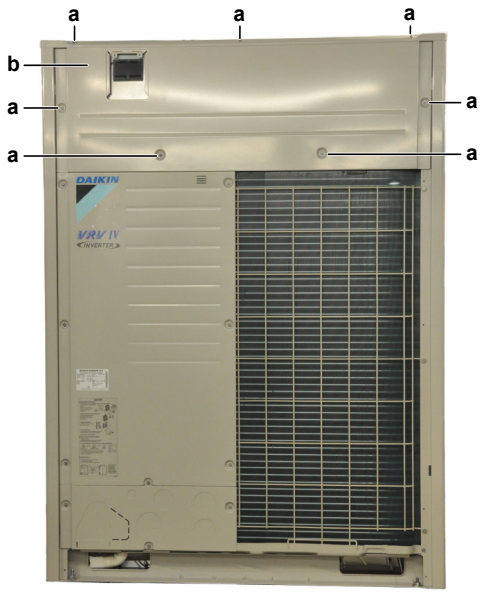

a Screw
b Upper front plate

4 Loosen and remove the 7 screws that fix the upper front plate assembly.

5 Lift the upper front plate assembly and remove it from the unit.

To remove the front plate

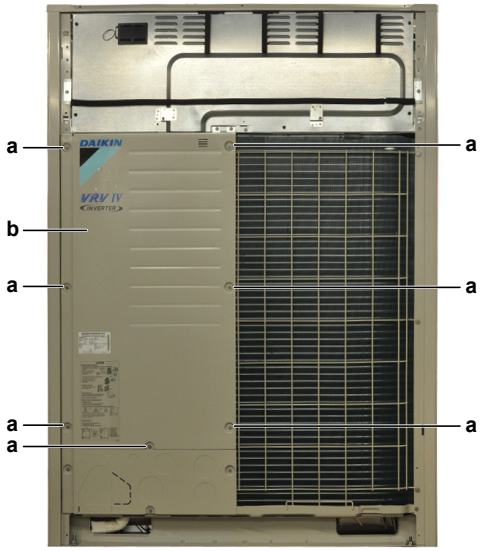

a Screw
b Front plate

6 Loosen and remove the 7 screws that fix the front plate assembly.

7 Lift the front plate assembly and remove it from the unit.

To remove the switch box cover

DANGER: RISK OF ELECTROCUTION

Wait for at least 10 minutes after the circuit breaker has been turned OFF, to be sure the rectifier voltage is below 10 V DC before proceeding.

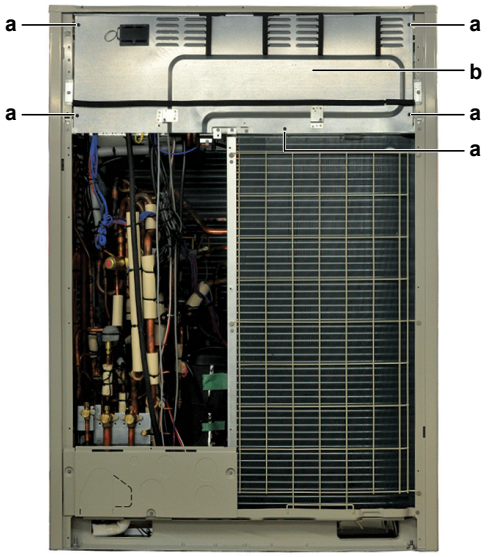

a Screw
b Switchbox cover

8 Loosen and remove the 5 screws that fix the switchbox cover.

9 Remove the switchbox cover from the unit.

To remove the lower front plate

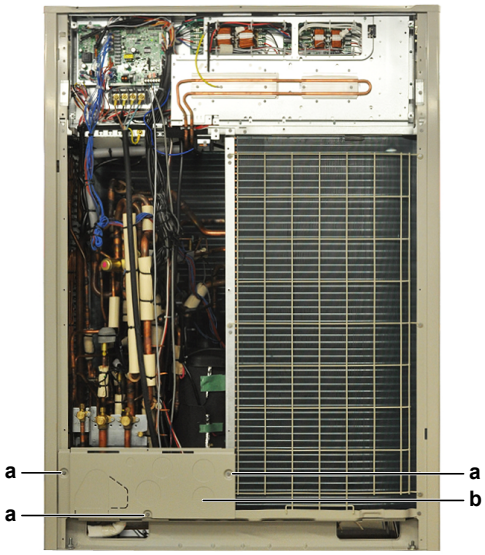

1 Screw
3 Lower front plate

10 Loosen and remove the 3 screws that fix the lower front plate assembly.

11 Lift the lower front plate assembly and remove it from the unit.

To remove the side plate

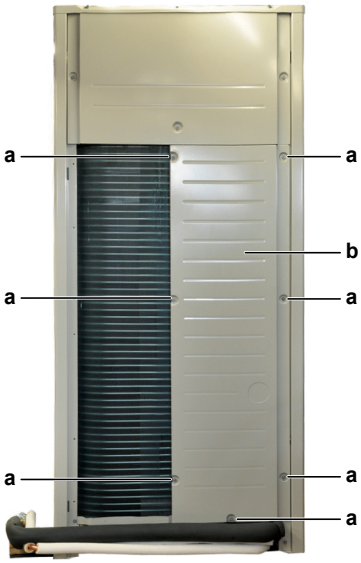

a Screw
b Side plate

12 Loosen and remove the 7 screws that fix the side plate assembly.

13 Lift the side plate assembly and remove it from the unit.

To remove the upper side plate

a Screw
b Upper side plate

14 Loosen and remove the 6 screws that fix the upper side plate assembly.

15 Lift the upper side plate assembly and remove it from the unit.

To remove the top plate

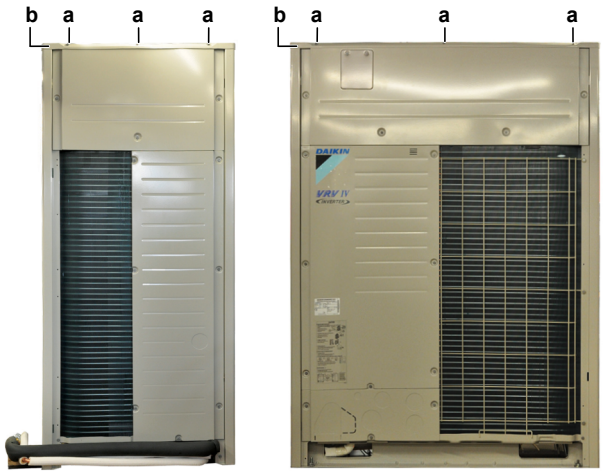

a Screw
b Top plate

16 Loosen and remove the 12 screws that fix the top plate assembly.

17 Remove the top plate from the unit.

3.14 Reactor

3.14.1 Checking procedures

To perform an electrical check of the reactor

Prerequisite: Stop the unit operation via the central controller.

Prerequisite: Turn OFF the respective circuit breaker.

1 Remove the required plate work, see "3.13 Plate work" [▶ 270].

> **DANGER: RISK OF ELECTROCUTION**
>
> Confirm the rectifier voltage is below 10 V DC before proceeding, see "To prevent electrical hazards" [▶ 299].

2 Access the switch box, see "3.13 Plate work" [▶ 270].

3 Visually check the reactor for any damage or burnt-out components. If any damage is found, replace the reactor, see "3.14.2 Repair procedures" [▶ 282].

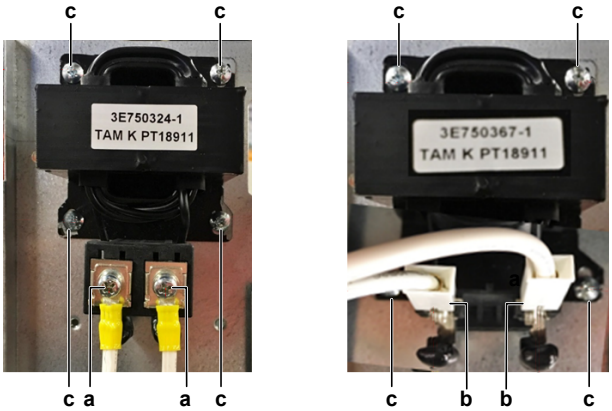

a Screw (wiring)
b Faston connector
c Screw (reactor)

4 Check the connections of the reactor on the inverter PCB('s) and check continuity of the wires, see "6.2 Wiring diagram" [▶ 325].

5 Remove the wiring or Faston connectors from the reactor.

6 Using a megger device of 500 V DC, check the insulation resistance. Make sure there is no earth leakage.

Is the measured insulation resistance correct?	Action
Yes	Continue with the next step.
No	Replace the reactor, see "3.14.2 Repair procedures" [▶ 282].

7 Measure the continuity of the reactor.

Is the continuity measurement correct?	Action
Yes	Return to the troubleshooting of the specific error and continue with the next step.
No	Replace the reactor, see "3.14.2 Repair procedures" [▶ 282].

3.14.2 Repair procedures

To remove the reactor

Prerequisite: Stop the unit operation via the central controller.

Prerequisite: Turn OFF the respective circuit breaker.

1 Remove the required plate work, see "3.13 Plate work" [▶ 270].

DANGER: RISK OF ELECTROCUTION

Confirm the rectifier voltage is below 10 V DC before proceeding, see "To prevent electrical hazards" [▶ 299].

2 Access the switch box, see "3.13 Plate work" [▶ 270].

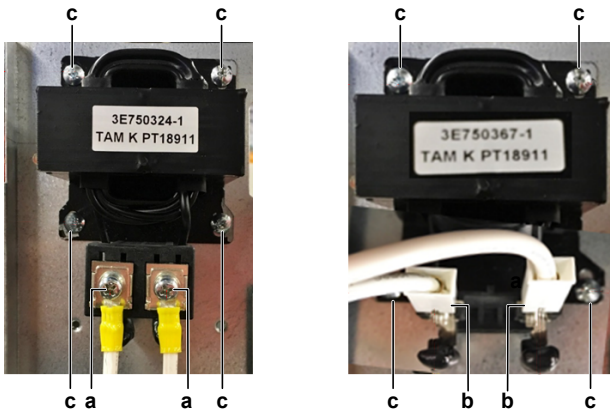

a Screw (wiring)
b Faston connector
c Screw (reactor)

3 Remove the screws or Faston connectors to disconnect the wires from the reactor.

4 Remove the 4 screws that fix the reactor to the switch box.

5 To install the reactor, see "3.14.2 Repair procedures" [▶ 282].

To install the reactor

1 Install the reactor on the correct location in the switch box.

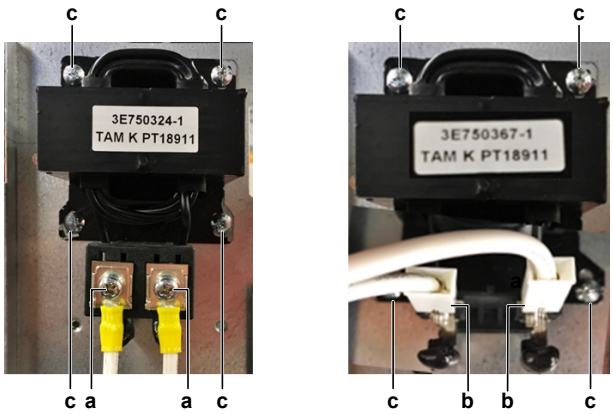

a Screw (wiring)
b Faston connector
c Screw (reactor)

2 Install the 4 screws that fix the reactor to the switch box.

3 Connect the wiring to the reactor using the screws or Faston connectors.

Is the problem solved?	Action
Yes	No further actions required.
No	Return to the troubleshooting of the specific error and continue with the next procedure.

3.15 Refrigerant high pressure sensor

3.15.1 Checking procedures

To perform an electrical check of the refrigerant pressure sensor

Prerequisite: Stop the unit operation via the central controller.

Prerequisite: Turn OFF the respective circuit breaker.

Prerequisite: Remove the required plate work, see "3.13 Plate work" [▶ 270].

1. Turn ON the power of the unit.
2. Connect a pressure gauge to the high pressure service port. Read the pressure.

> **INFORMATION**
> When the unit is operating in heating mode, the high pressure port is the gas service port. When the unit is operating in cooling (defrost) mode, the high pressure port is the liquid service port.

3. Using the graphic below, determine the expected sensor output voltage based on the pressure obtained in the previous step.

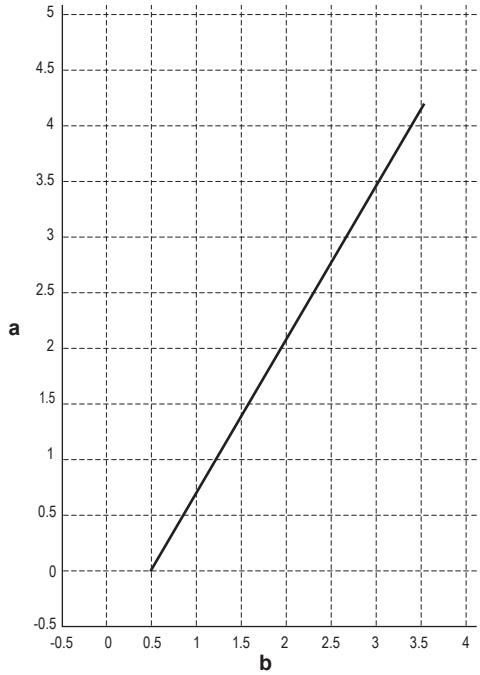

a Detected pressure (MPa)
b Output voltage (V)

V (DC)	Detected pressure MPa
0.5	0.01
0.6	0.15
0.7	0.29
0.8	0.42
0.9	0.56
1.0	0.70
1.1	0.84

V (DC)	Detected pressure MPa
1.2	0.98
1.3	1.11
1.4	1.25
1.5	1.39
1.6	1.53
1.7	1.67
1.8	1.80
1.9	1.94
2.0	2.08
2.1	2.22
2.2	2.36
2.3	2.49
2.4	2.63
2.5	2.77
2.6	2.91
2.7	3.05
2.8	3.18
2.9	3.32
3.0	3.46
3.1	3.60
3.2	3.74
3.3	3.87
3.4	4.01
3.5	4.15
3.6	4.29

4 Measure the voltage on X32A: pins 1–3 (= refrigerant pressure sensor output signal).

5 Check that the measured voltage is in line with the expected voltage through the read refrigerant pressure.

INFORMATION

Connect the service monitoring tool to the unit or use field settings mode 1 (see "6.9 Field settings" [▶ 380]) to monitor the high pressure.

If the measured output voltage value matches the voltage determined through the measured pressure, but the pressure via the service monitoring tool is NOT correct, replace the appropriate PCB.

The measured voltage is inside the expected range?	Action
Yes	Refrigerant pressure sensor is OK. Return to the troubleshooting of the specific error and continue with the next procedure.
No	Continue with the next step.

6 Unplug the refrigerant pressure sensor connector X32A and measure the voltage (power supply) between pins 3–4 on main PCB.

Result: The measured voltage MUST be +5 V DC.

Is the measured voltage +5 V DC?	Then
Yes	Replace the refrigerant pressure sensor, see "3.15.2 Repair procedures" [▶ 286].
No	Perform a check of the main PCB, see "3.9 Main PCB" [▶ 243].

3.15.2 Repair procedures

To remove the refrigerant pressure sensor

Prerequisite: Stop the unit operation via the central controller.

Prerequisite: Turn OFF the respective circuit breaker.

Prerequisite: Remove the required plate work, see "3.13 Plate work" [▶ 270].

Prerequisite: Recuperate the refrigerant from the refrigerant circuit, see "4.2.2 Repair procedures" [▶ 311].

Prerequisite: If needed, remove any parts or insulation to create more space for the removal.

1 Cut all tie straps that fix the refrigerant pressure sensor harness.

2 Disconnect the refrigerant pressure sensor connector from the PCB.

3 Supply nitrogen to the refrigerant circuit. The nitrogen pressure MUST NOT exceed 0.02 MPa.

4 Wrap a wet rag around the components near the refrigerant pressure sensor. Heat the brazing point of the refrigerant pressure sensor pipe using an oxygen acetylene torch and remove the refrigerant pressure sensor pipe from the refrigerant pipe using pliers.

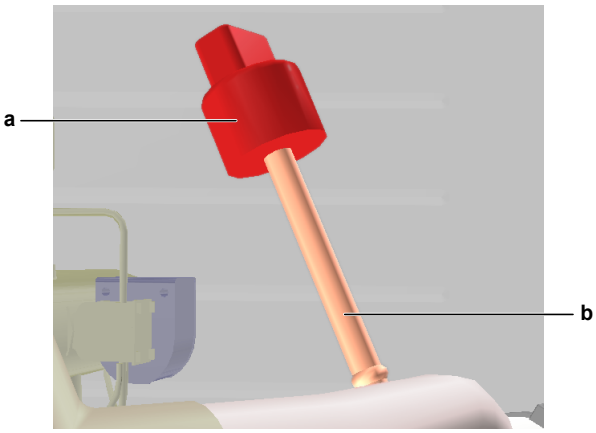

a Refrigerant pressure sensor
b Refrigerant pressure sensor pipe

5 Stop the nitrogen supply when the piping has cooled down.

6 Remove the refrigerant pressure sensor.

> **INFORMATION**
>
> It is ALSO possible to cut the component pipe(s) using a pipe cutter. Make sure to remove the remaining component pipe end(s) from the refrigerant pipes by heating the brazing point(s) of the component pipe(s) using an oxygen acetylene torch.

7 Install a plug or cap on the refrigerant piping to avoid dirt or impurities from entering the piping.

8 To install the refrigerant pressure sensor, see "3.15.2 Repair procedures" [▶ 286].

To install the refrigerant pressure sensor

1 Remove the plug or cap from the refrigerant piping and make sure it is clean.

2 Install the refrigerant pressure sensor in the correct location.

3 Supply nitrogen to the refrigerant circuit. The nitrogen pressure MUST NOT exceed 0.02 MPa.

4 Wrap a wet rag around the refrigerant pressure sensor and any other components near the pressure sensor and solder the refrigerant pressure sensor pipe to the refrigerant pipe.

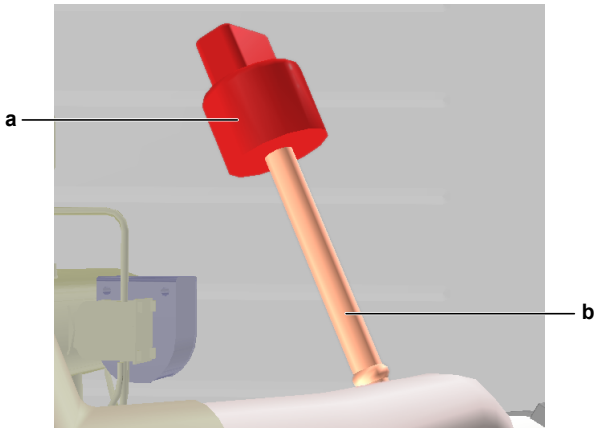

a Refrigerant pressure sensor
b Refrigerant pressure sensor pipe

> **CAUTION**
>
> Overheating the pressure sensor will damage or destroy it.

5 After soldering is done, stop the nitrogen supply after the component has cooled-down.

6 Route the refrigerant pressure sensor harness towards the appropriate PCB.

7 Connect the refrigerant pressure sensor connector to the appropriate PCB.

8 Fix the refrigerant pressure sensor harness using new tie straps.

9 Perform a pressure test, see "4.2.1 Checking procedures" [▶ 306].

10 Add refrigerant to the refrigerant circuit, see "4.2.2 Repair procedures" [▶ 311].

Is the problem solved?	Action
Yes	No further actions required.

Is the problem solved?	Action
No	Return to the troubleshooting of the specific error and continue with the next procedure.

3.16 Refrigerant low pressure sensor

3.16.1 Checking procedures

To perform an electrical check of the refrigerant pressure sensor

Prerequisite: Stop the unit operation via the central controller.

Prerequisite: Turn OFF the respective circuit breaker.

Prerequisite: Remove the required plate work, see "3.13 Plate work" [▶ 270].

1. Turn ON the power of the unit.
2. Connect a pressure gauge to the refrigerant charge port. Read the pressure.
3. Using the graphic below, determine the expected sensor output voltage based on the pressure obtained in the previous step.

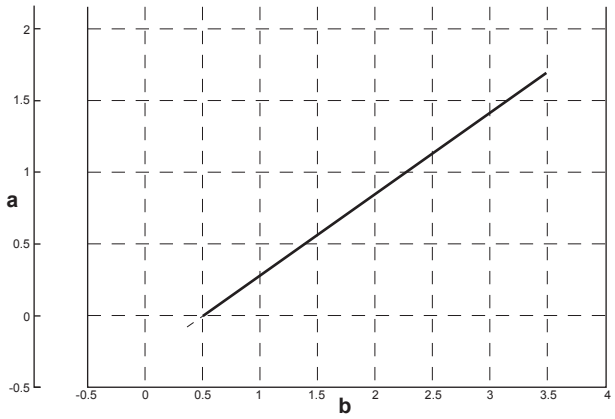

a Detected pressure (MPa)
b Output voltage (V)

V (DC)	Detected pressure (MPa)
0.3	–0.12
0.4	–0.07
0.5	–0.01
0.6	0.05
0.7	0.10
0.8	0.16
0.9	0.22
1.0	0.28
1.1	0.33
1.2	0.39
1.3	0.45
1.4	0.50

V (DC)	Detected pressure (MPa)
1.5	0.56
1.6	0.62
1.7	0.67
1.8	0.73
1.9	0.79
2.0	0.85
2.1	0.90
2.2	0.96
2.3	1.02
2.4	1.07
2.5	1.13
2.6	1.19
2.7	1.24
2.8	1.30
2.9	1.36
3.0	1.42
3.1	1.47
3.2	1.53
3.3	1.59
3.4	1.64
3.5	1.70

INFORMATION

The refrigerant pressure sensor connector MUST be plugged into the appropriate PCB.

4 Measure the voltage on X31A: pins 2–3 (= refrigerant pressure output signal) on the main PCB.

5 Check that the measured voltage is in line with the expected voltage through the read refrigerant pressure.

INFORMATION

Connect the service monitoring tool to the unit or use field settings mode 1-43 (see "6.9 Field settings" [▶ 380]) to monitor the low pressure.

If the measured output voltage value matches the voltage determined through the measured pressure, but the pressure via the service monitoring tool is NOT correct, replace the applicable PCB.

The measured voltage is inside the expected range?	Action
Yes	Refrigerant pressure sensor is OK. Return to the troubleshooting of the specific error and continue with the next procedure.
No	Continue with the next step.

6 Unplug the refrigerant pressure sensor connector X31A and measure the voltage (power supply) between pins 3–4 on main PCB.

Result: The measured voltage MUST be +5 V DC.

Is the measured voltage +5 V DC?	Then
Yes	Replace the refrigerant pressure sensor, see "3.16.2 Repair procedures" [▶ 290].
No	Perform a check of the main PCB, see "3.9 Main PCB" [▶ 243].

3.16.2 Repair procedures

To remove the refrigerant pressure sensor

Prerequisite: Stop the unit operation via the central controller.

Prerequisite: Turn OFF the respective circuit breaker.

Prerequisite: Remove the required plate work, see "3.13 Plate work" [▶ 270].

Prerequisite: Recuperate the refrigerant from the refrigerant circuit, see "4.2.2 Repair procedures" [▶ 311].

Prerequisite: If needed, remove any parts or insulation to create more space for the removal.

1 Cut all tie straps that fix the refrigerant pressure sensor harness.

2 Disconnect the refrigerant pressure sensor connector from the PCB.

3 Supply nitrogen to the refrigerant circuit. The nitrogen pressure MUST NOT exceed 0.02 MPa.

4 Wrap a wet rag around the components near the refrigerant pressure sensor. Heat the brazing point of the refrigerant pressure sensor pipe using an oxygen acetylene torch and remove the refrigerant pressure sensor pipe from the refrigerant pipe using pliers.

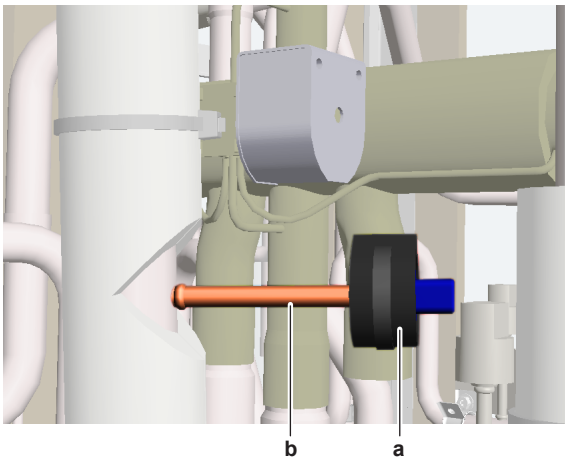

a Refrigerant pressure sensor

b Refrigerant pressure sensor pipe

5 Stop the nitrogen supply when the piping has cooled down.

6 Remove the refrigerant pressure sensor.

> **INFORMATION**
>
> It is ALSO possible to cut the component pipe(s) using a pipe cutter. Make sure to remove the remaining component pipe end(s) from the refrigerant pipes by heating the brazing point(s) of the component pipe(s) using an oxygen acetylene torch.

7 Install a plug or cap on the refrigerant piping to avoid dirt or impurities from entering the piping.

8 To install the refrigerant pressure sensor, see "3.16.2 Repair procedures" [▶ 290].

To install the refrigerant pressure sensor

1 Remove the plug or cap from the refrigerant piping and make sure it is clean.

2 Install the refrigerant pressure sensor in the correct location.

3 Supply nitrogen to the refrigerant circuit. The nitrogen pressure MUST NOT exceed 0.02 MPa.

4 Wrap a wet rag around the refrigerant pressure sensor and any other components near the pressure sensor and solder the refrigerant pressure sensor pipe to the refrigerant pipe.

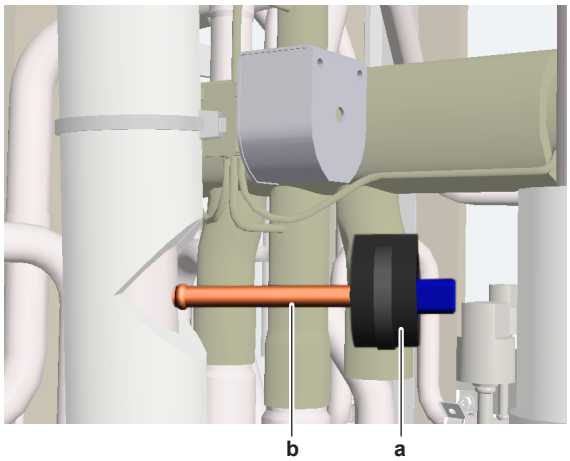

a Refrigerant pressure sensor
b Refrigerant pressure sensor pipe

> **CAUTION**
>
> Overheating the pressure sensor will damage or destroy it.

5 After soldering is done, stop the nitrogen supply after the component has cooled-down.

6 Route the refrigerant pressure sensor harness towards the appropriate PCB.

7 Connect the refrigerant pressure sensor connector to the appropriate PCB.

8 Fix the refrigerant pressure sensor harness using new tie straps.

9 Perform a pressure test, see "4.2.1 Checking procedures" [▶ 306].

10 Add refrigerant to the refrigerant circuit, see "4.2.2 Repair procedures" [▶ 311].

Is the problem solved?	Action
Yes	No further actions required.
No	Return to the troubleshooting of the specific error and continue with the next procedure.

3.17 Thermistors

3.17.1 Refrigerant side thermistors

Checking procedures

> **INFORMATION**
> It is recommended to perform the checks in the listed order.

To perform a mechanical check of the specific thermistor

Prerequisite: Stop the unit operation via the central controller.

Prerequisite: Turn OFF the respective circuit breaker.

Prerequisite: Remove the required plate work, see "3.13 Plate work" [▶ 270].

1 Locate the thermistor and remove the insulation if needed. Check that the thermistor is correctly installed and that there is thermal contact between the thermistor and the piping or ambient (for air thermistor).

Is the thermistor correctly installed (thermal contact between the thermistor and the piping)?	Action
Yes	Perform an electrical check of the specific thermistor, see "Checking procedures" [▶ 292].
No	Correctly install the thermistor, see "Repair procedures" [▶ 295].

To perform an electrical check of the specific thermistor

1 First perform a mechanical check of the thermistor, see "Checking procedures" [▶ 292].

2 Locate the thermistor.

> **INFORMATION**
> Remove the thermistor from its holder if not reachable with a contact thermometer.

3 Measure the temperature using a contact thermometer.

Name	Symbol	Location (PCB)	Connector (pins)	Reference (table)
Air thermistor	R1T	Main	X18A:1-3	A
Suction pipe thermistor	R3T	Main	X30A:1-2	A

Name	Symbol	Location (PCB)	Connector (pins)	Reference (table)
Refrigerant liquid thermistor of the outdoor heat exchanger	R4T	Main	X30A:3-4	A
Refrigerant liquid thermistor of the subcool heat exchanger	R5T	Main	X30A:5-6	A
Gas pipe thermistor of the subcool heat exchanger	R6T	Main	X30A:7-8	A
De-icer thermistor	R7T	Main	X30A:9-10	A
Compressor M1C body thermistor	R8T	Main	X19A:5-6	B
Compressor M2C body thermistor	R9T	Main	X19A:7-8	B
Compressor M1C discharge pipe thermistor	R21T	Main	X19A:1-2	B
Compressor M2C discharge pipe thermistor	R22T	Main	X19A:3-4	B

4 Determine the thermistor resistance that matches the measured temperature.

Thermistor – Table A

T °C	kΩ	T °C	kΩ	T °C	kΩ	T °C	kΩ
–20	197.81	10	39.96	40	10.63	70	3.44

T °C	kΩ	T °C	kΩ	T °C	kΩ	T °C	kΩ
–19	186.53	11	38.08	41	10.21	71	3.32
–18	175.97	12	36.30	42	9.81	72	3.21
–17	166.07	13	34.62	43	9.42	73	3.11
–16	156.80	14	33.02	44	9.06	74	3.01
–15	148.10	15	31.50	45	8.71	75	2.91
–14	139.94	16	30.06	46	8.37	76	2.82
–13	132.28	17	28.70	47	8.05	77	2.72
–12	125.09	18	27.41	48	7.75	78	2.64
–11	118.34	19	26.18	49	7.46	79	2.55
–10	111.99	20	25.01	50	7.18	80	2.47
–9	106.03	21	23.91	51	6.91		
–8	100.41	22	22.85	52	6.65		
–7	95.14	23	21.85	53	6.41		
–6	90.17	24	20.90	54	6.65		
–5	85.49	25	20.00	55	6.41		
–4	81.08	26	19.14	56	6.18		
–3	76.93	27	18.32	57	5.95		
–2	73.01	28	17.54	58	5.74		
–1	69.32	29	16.80	59	5.14		
0	65.84	30	16.10	60	4.87		
1	62.54	31	15.43	61	4.70		
2	59.43	32	14.79	62	4.54		
3	56.49	33	14.18	63	4.38		
4	53.71	34	13.59	64	4.23		
5	51.09	35	13.04	65	4.08		
6	48.61	36	12.51	66	3.94		
7	46.26	37	12.01	67	3.81		
8	44.05	38	11.52	68	3.68		
9	41.95	39	11.06	69	3.56		

Thermistor – Table B

T °C	kΩ	T °C	kΩ	T °C	kΩ	T °C	kΩ
0	635.1	40	106.2	80	24.9	120	7.5
5	496.6	45	87.1	85	21.1	125	6.5
10	391	50	71.8	90	18	130	5.7
15	310	55	59.5	95	15.4	135	5
20	247.3	60	49.5	100	13.3	140	4.4
25	198.5	65	41.4	105	11.4	145	3.9
30	160.2	70	34.8	110	9.9	150	3.4
35	130.1	75	29.3	115	8.6		

5 Disconnect the thermistor connector from the appropriate PCB.

6 Measure the resistance between the appropriate pins of the thermistor connector.

7 Check that the measured resistance value matches the resistance determined through the measured temperature (earlier step in the procedure).

- E.g. R3T thermistor:
- Measured temperature with contact thermometer: 23.1°C,
- Resistance value determined through temperature (using the thermistor table A):
  Resistance at 23°C: 21.85 kΩ,
  Resistance at 24°C: 20.90 kΩ,
- Disconnect connector and measure resistance between X30A pin 1-2:
  Measured resistance: 21.8 kΩ,
- Measured resistance value is inside the range. R3T thermistor passes the check.

INFORMATION

All thermistors have a resistance tolerance of 3%.

INFORMATION

Connect the service monitoring tool to the unit or use field settings mode 1 (see "6.9 Field settings" [▶ 380]) to monitor the thermistors.

If the measured resistance value matches the resistance determined through the measured temperature, but the temperature for the corresponding thermistor via service monitoring tool or field settings mode 1 is NOT correct, replace the applicable PCB.

Does the measured resistance of the thermistor match with the temperature determined resistance?	Action
Yes	Thermistor is OK. Return to the troubleshooting of the specific error and continue with the next procedure.
No	Replace the specific thermistor, see "Repair procedures" [▶ 295].

Repair procedures

To remove the thermistor

Prerequisite: Stop the unit operation via the central controller.

Prerequisite: Turn OFF the respective circuit breaker.

Prerequisite: Remove the required plate work, see "3.13 Plate work" [▶ 270].

1 Locate the thermistor that needs to be removed.

2 Remove the thermistor from the thermistor holder as follows:

- For air (ambient) thermistor:
  Open the thermistor holder and remove the thermistor from the holder.

- For refrigerant piping thermistors:
  - Cut the tie straps that fix the insulation and the thermistor wire.
  - Slide the insulation aside.
  - Pull the clip that fixes the thermistor.
  - Remove the thermistor from the thermistor holder.

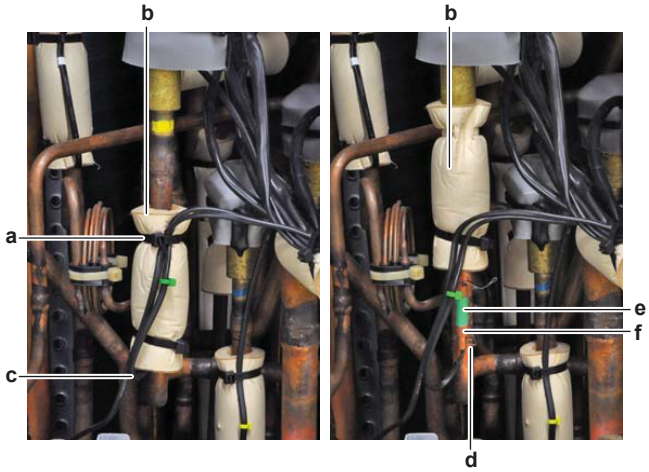

a Tie strap
b Insulation
c Thermistor wire
d Clip
e Thermistor holder
f Thermistor

3 Cut all tie straps that fix the thermistor harness.

4 Disconnect the thermistor connector from the appropriate PCB.

> **INFORMATION**
>
> Some of the thermistors are wired to the same connector. See connector and pin information of the thermistors at the start of the electrical check procedure and "6.2 Wiring diagram" [▸ 325]. ALWAYS replace the complete set of thermistors wired to the same connector.

5 When removing the complete set of thermistors wired to the same connector:

- Remove all other thermistors wired to the connector from their thermistor holder,
- Disconnect the thermistor connector,
- Remove the complete set of thermistors.

6 To install the thermistor, see "Repair procedures" [▸ 295].

To install the thermistor

1 Install the thermistor in the thermistor holder as follows:

- For air (ambient) thermistor:
  Correctly install the thermistor in the holder and close the thermistor holder.
- For refrigerant piping thermistors:
  Pull the clip and install the thermistor in the specific thermistor holder. Make sure the clip is in the correct position (blocking the thermistor).

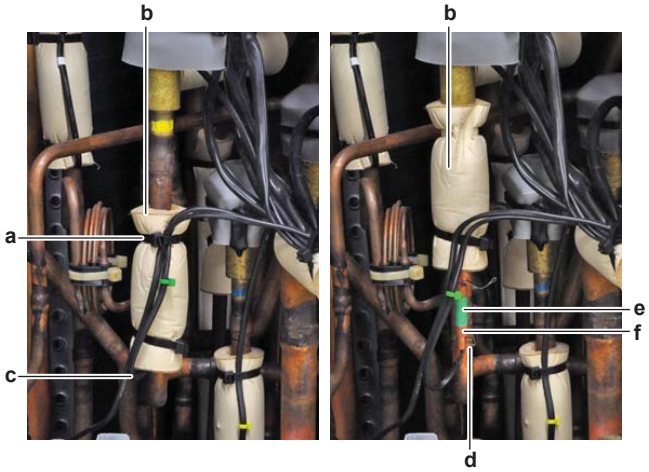

a Tie strap
b Insulation
c Thermistor wire
d Clip
e Thermistor holder
f Thermistor

2 Route the thermistor harness towards the appropriate PCB.

3 Connect the thermistor connector to the appropriate PCB.

> **INFORMATION**
>
> Some of the thermistors are wired to the same connector. See connector and pin information of the thermistors at the start of the electrical check procedure and "6.2 Wiring diagram" [▸ 325]. ALWAYS replace the complete set of thermistors wired to the same connector.

4 When installing the complete set of thermistors wired to the same connector:

- Install all other thermistors wired to the connector in their thermistor holder,
- Route the thermistor harness of all thermistors towards the appropriate PCB or intermediate connector,
- Connect the thermistor connector.

> **WARNING**
>
> When reconnecting a connector to the PCB, make sure to connect it on the correct location and do NOT apply force, as this may damage the connector or connector pins of the PCB.

5 Fix the thermistor harness using new tie straps.

6 Install the insulation around the thermistor.

7 Fix the insulation and the thermistor wire using new tie straps.

Is the problem solved?	Action
Yes	No further actions required.
No	Return to the troubleshooting of the specific error and continue with the next procedure.

3.17.2 Other thermistors

Checking procedures

To perform an electrical check of the fin thermistor

1. Stop operation of the outdoor unit and wait for at least 30 minutes.
2. Measure the ambient temperature close to the outdoor unit.
3. Connect the service checker tool to the outdoor unit.
4. Read the temperature of the specific PCB fin thermistor. The read temperature MUST correspond to the measured ambient temperature.

Does the temperature of the fin thermistor match with the ambient temperature?	Action
Yes	Thermistor is OK. Return to the troubleshooting of the specific error and continue with the next procedure.
No	Replace the specific PCB, see "3 Components" [▶ 169].

4 Third party components

4.1 Electrical circuit

4.1.1 Checking procedures

To check the power supply of the unit

Prerequisite: Stop the unit operation via the central controller.

Prerequisite: Turn OFF the respective circuit breaker.

Prerequisite: Remove the required plate work, see "3.13 Plate work" [▶ 270].

1. Check that the power supply cables and earth connection are firmly fixed to the power supply terminal X1M.
2. Measure the insulation resistance between each power supply terminal and the ground using a megger device of 500 V DC. All measurements MUST be >1MΩ. If insulation resistance is <1MΩ, earth leakage is present.
3. Turn ON the power of the unit.
4. Measure the voltage between the phases L1-L2-L3 on the power supply terminal X1M. The voltage MUST be 400 V AC ± 10%.
5. Measure the voltage between each phase and N on the power supply terminal X1M. The voltage MUST be 230 V AC ± 10%.
6. Unbalance between the phases MUST NOT exceed 2%.

Is the measured voltage (power supply) correct?	Action
Yes	Return to the troubleshooting of the specific error and continue with the next procedure.
No	Adjust the power supply, see "4.1.2 Repair procedures" [▶ 304].

To check if the power supply is compliant with the regulations

1. Check that the power source is in line with the requirements described in the databook.

Is the power supply compliant with the regulations?	Action
Yes	Return to the troubleshooting of the specific error and continue with the next procedure.
No	Adjust the power supply, see "4.1.2 Repair procedures" [▶ 304].

To prevent electrical hazards

To check the rectifier voltage

1. Stop the unit operation (via the central controller).
2. Turn OFF the respective circuit breaker.

For single fan units

3 Measure the voltage on the rectifier voltage check connector X3A, located above the power terminal assembly.

Result: The measured voltage should be below 10 V DC.

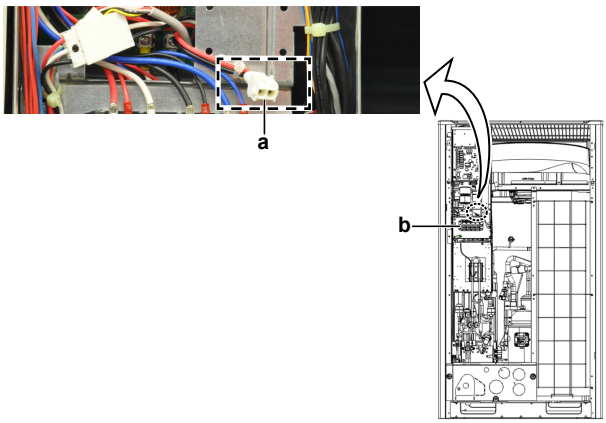

a Connector X3A
b Power terminal assembly

For double fan units

4 Measure the voltage on the rectifier voltage check connector X5A to check inverter PCB A3P.

Result: The measured voltage should be below 10 V DC.

5 Measure the voltage on the rectifier voltage check connector X6A to check inverter PCB A6P.

Result: The measured voltage should be below 10 V DC

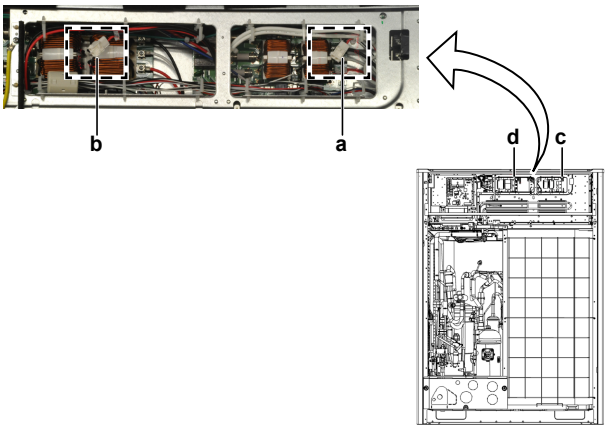

a Connector X5A
b Connector X6A
c Inverter PCB A3P
d Inverter PCB A6P

DANGER: RISK OF ELECTROCUTION

Confirm the rectifier voltage is below 10 V DC before proceeding.

Additional information

6 To prevent damaging the PCB, touch a non-coated metal part to eliminate static electricity before pulling out or plugging in connectors.

7 Pull out junction connectors X1A, X2A for the fan motors in the outdoor unit before starting service operation on the inverter equipment. Be careful NOT to touch the live parts. (If a fan rotates due to strong wind, it may store electricity in the capacitor or in the main circuit and cause electrical shock.)

8 After the service is finished, plug the junction connector back in. Otherwise the malfunction code E7 will be displayed on the user interface or on the outdoor unit 7-segment display and normal operation will NOT be performed.

For details refer to the wiring diagram labelled on the back of the electrical component box cover.

Pay attention to the fan. It is dangerous to inspect the unit while the fan is running. Make sure to turn off the main switch and to remove the fuses from the control circuit located in the outdoor unit.

To check F1-F2 transmission

To check the F1-F2 wiring

1 Check that the wiring:

- is within installation length limits,
- is of the proper wire type,
- is of the proper wire thickness,
- is properly fixed to the terminals,
- is executed according to the installation manual, with no star connections.

2 Check that no shielded cables are used or that shielded cables are grounded only on one side of the cable.

3 Check that F1-F2 wiring has continuity all over.

Is the wiring correctly executed, as indicated in the installation manual?	Action
Yes	Continue with the next step in this checking procedure.
No	Modify the wiring, see the installation manual.

To measure the F1-F2 transmission

F1-F2 transmission is a D3Net rectangular waveform, 16 VDC ± 5 V with 16-5V amplitude that appears on the 16V base line:

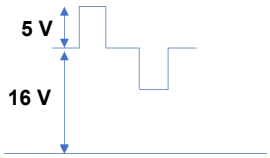

F1-F2 terminals on indoor units, BP-units, outdoor units and central controllers are all possible measurement points. Use as many points as you can and take the time necessary for measurement if analyzing with an oscilloscope.

On outdoor units, measurement should be done either at F1-F2 IN or F1-F2 OUT. If the F1-F2 OUT terminal is not used, then measure at the F1-F2 IN terminal.

You can conduct the measuring with a multimeter or an oscilloscope.

To measure the F1-F2 transmission with a multimeter:

4 Set the multimeter to DC Voltage measurement.

5 Measure on the F1 and F2 terminals.

Result: 16 V DC should be read.

To measure the F1-F2 transmission with an oscilloscope:

> **INFORMATION**
>
> Ensure that probes are securely connected to F1-F2 terminals. Otherwise, distortions will be generated resulting in misinterpretation of data. It is recommended to connect temporary cables to the probes and then connect the cables to the terminals securely.

6 Measure at as many points as you can, this can help to determinate the problem.

For example: if the measurements at the indoor unit side are distorted while central controller and outdoor unit seem OK, you can suppose that the failure in transmission is related to the indoor unit side.

7 Set time base (horizontal) to 50 µs/div to 100 µs. Voltage axis (vertical) should be set to 2V/div to 5V. Set position properly, otherwise the data may appear outside the screen. In AC mode, which is a sampling mode in oscilloscopes, waveforms appear in the middle of the screen. So, it is recommended to use AC mode if possible.

8 Set the triggering mode of the oscilloscope to "Normal". If "Auto" mode is selected, observed waveforms may be cleared instantaneously leading to misinterpretation of data.

9 Ignore very short-time pulses of 1V amplitude or less, or overshooting at the rising edge may be ignored. Focus on the shown points of the waveform below:

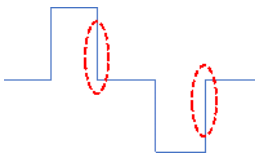

Examples of waveform distortions on D3Net and possible causes:

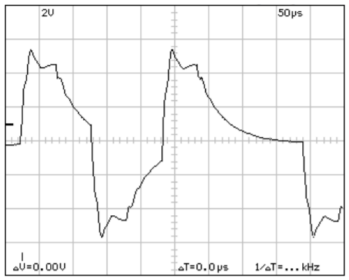	**Rounded waveforms at falling edges.** Possible reasons: ▪ Excessive wire length, ▪ Excessive number of connected devices, ▪ Branching (star connections).
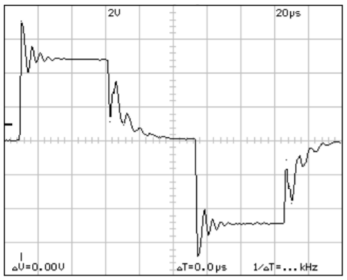	**Ringing.** Possible reasons: ▪ Transmission wiring very close to high voltage cables, ▪ Use of multi-conductor type wires.

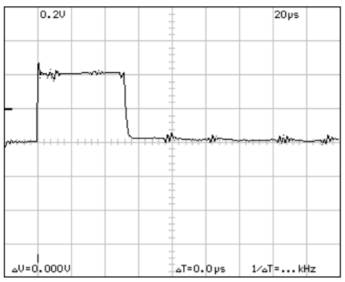	**Noise.** Possible reasons: ▪ Transmission wiring very close to high voltage cables, ▪ Transmission wiring effected from external equipment causing noise.
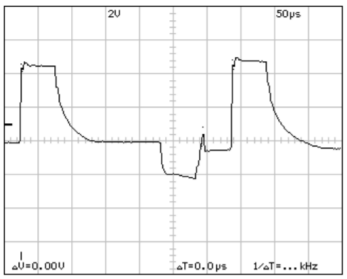	**Faulty Waveform.** Possible reasons: ▪ Transmission circuit failure on a PCB.

After checking and correcting possible causes of F1-F2 transmission problems, perform a communication reset (see "4.1.2 Repair procedures" [▸ 304]).

To check the communication between outdoor units

Q1 and Q2 are connection terminals for the transmission wiring between multi outdoor units. Perform as follows:

1. Make sure that all wires are firmly and correctly connected, see "6.2 Wiring diagram" [▸ 325].
2. Check the continuity of all wires.
3. Replace any damaged or broken wires.
4. Measure the voltage on the main PCB's of all connected outdoor units as shown below:

VDC	Com.	Ref.
Q1	X37A	13 V DC
Q2	X37A	13 V DC
Q1	X37A	-3 V DC
Q2	X37A	-3 V DC

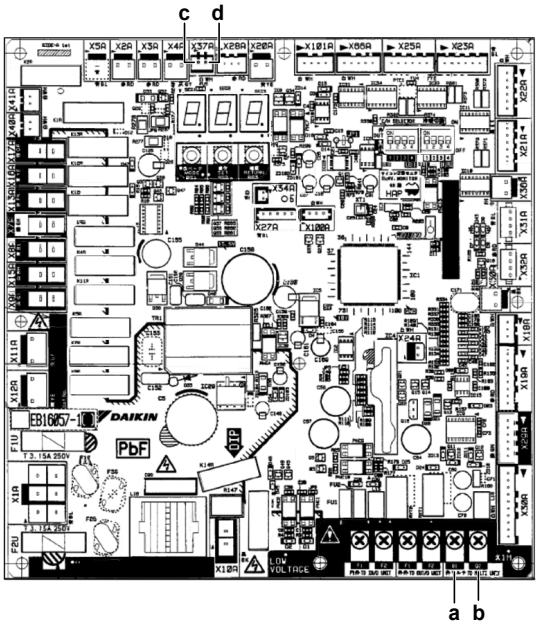

a Terminal Q1
b Terminal Q2
c Connector X37A pin 1
d Connector X37A pin 2

Is the measured voltage correct?	Action
Yes	Return to the troubleshooting of the specific error and continue with the next procedure.
No	Perform a check of the main PCB, see "3.9 Main PCB" [▶ 243].

To check the wiring between the outdoor unit and the indoor unit

1. Check that all wires are properly connected and that all connectors are fully plugged-in.
2. Check that no connectors or wires are damaged.
3. Check that the wiring corresponds with the wiring diagram, see "6.2 Wiring diagram" [▶ 325].

INFORMATION

Correct the wiring as needed.

Is the problem solved?	Action
Yes	No further actions required.
No	Return to the troubleshooting of the specific error and continue with the next procedure.

4.1.2 Repair procedures

To adjust the power supply

1. Make sure that the power source is in line with the requirements described in the databook.
2. Adjust the power supply within 50 Hz ± 3%.

Is the problem solved?	Action
Yes	No further actions required.
No	Return to the troubleshooting of the specific error and continue with the next procedure.

To perform a communication reset

NOTICE

If an indoor unit is powered OFF when communication reset is performed, the outdoor unit will delete this indoor unit information since this unit will not be identified during re-initialization. If so, this unit will not be recognized by the outdoor unit upon power restore to this indoor unit.

1 Set multimeter to V DC measurement. The example below is performed while COM-F1 and V DC-F2, the polarity will be opposite than the graph below if connected otherwise (which is not a problem).

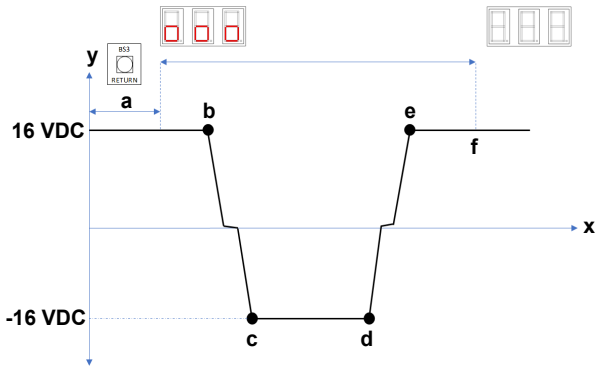

a Y: Voltage (VDC)
b X: Time

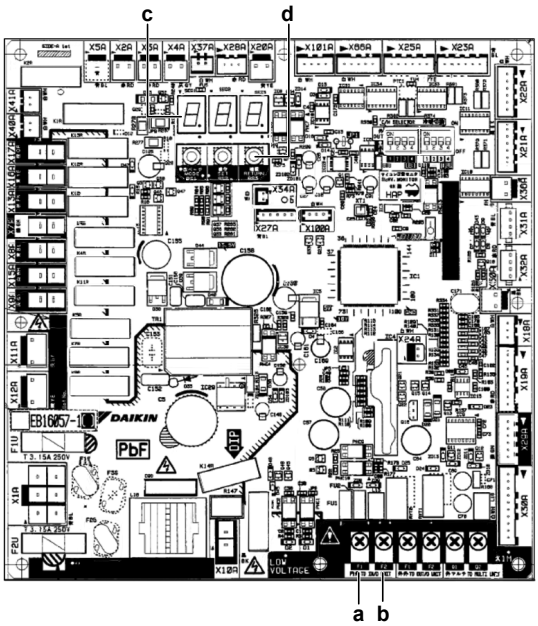

a Terminal F1
b Terminal F2
c 7-segment display
d Push button BS3

2 Push BS3 (RETURN) and hold it for 5 seconds until the 7-segment display shows "000". Then release BS3.

Result: After a while, voltage will drop to almost 0 V DC. At this stage it means that re-initialization has started.

Result: Depending on the system size, voltage will rise to 16 V DC and hit 0 V back again several times.

Result: When finished, 7-Segment Display will turn OFF. This indicates that re-initialization has completed.

The time this procedure takes, depends on the amount of indoor units.

4.2 Refrigerant circuit

4.2.1 Checking procedures

INFORMATION

It is recommended to perform the checks in the listed order.

To check if the stop valves are open

Prerequisite: Remove the required plate work, see "3.13 Plate work" [▶ 270].

1 Remove the caps.

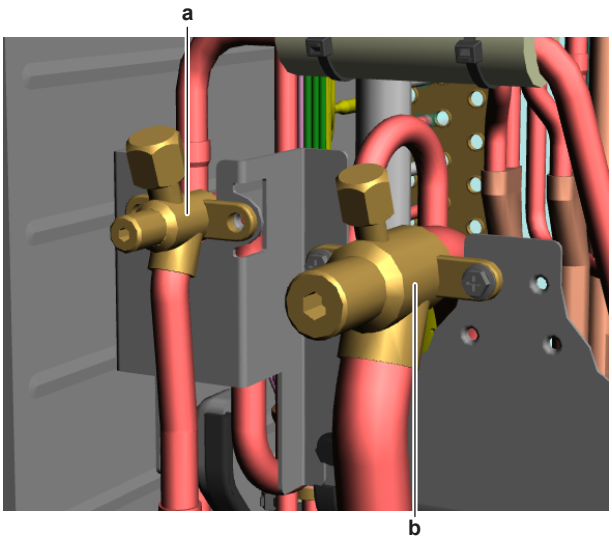

a Liquid stop valve
b Gas stop valve

2 Check if the stop valves are completely open.

The refrigerant circuit stop valves are open?	Action
Yes	Return to the troubleshooting of the specific error and continue with the next procedure.
No	Open the stop valves of the refrigerant circuit, see "4.2.2 Repair procedures" [▶ 311].

To check if the refrigerant circuit is clogged

Prerequisite: Stop the unit operation via the central controller.

Prerequisite: Turn OFF the respective circuit breaker.

1. Wait for the refrigerant to reach the outdoor temperature.
2. Check that all field piping is done according to the refrigeration practice and installer reference guide:
   - Correct piping diameters
   - Piping distance limits are followed
   - NO pipes are squeezed
   - NO short radius bends
3. Connect a manometer to the high pressure and low pressure service ports.
4. Turn ON the power of the unit.
5. Activate `Heating` operation via the Cool/Heat master user interface.
6. Read the pressure on the high and low pressure gauges. If the difference between high and low pressure >0.2 MPa, the refrigerant circuit might be clogged.
7. On the refrigerant liquid piping (between the indoor unit heat exchanger and the outdoor unit heat exchanger (coil)), using a contact thermometer, measure the temperature before and after every restricting device. If a big temperature difference is measured (>2.5~4K), an internal pipe obstruction may be present at this location.

INFORMATION

Focus on positions with a potential risk for clogging such as:

- Filters
- Valves
- Brazing points
- ...

INFORMATION

A bigger temperature drop before and after the expansion valve can be normal, however excessive ice is indicating a malfunction of the expansion valve or internal obstruction of the valve (dirt or ice build up in case of humidity in the system).

Temperature drop found?	Action
Yes	Replace the clogged part, see "4.2.2 Repair procedures" [▶ 311].
No	Return to the troubleshooting of the specific error and continue with the next procedure.

To check if the refrigerant circuit is correctly charged

Due to the relationship to pressure control and electronic expansion valve control, the amount of refrigerant needs to be examined according to operating conditions.

Refer to the procedures shown below for correct examination.

Refrigerant overcharge diagnosis

1. High pressure rises. Consequently, overload control is conducted to cause insufficient cooling capacity.
2. The superheated degree of suction gas lowers (or the wet operation is performed). Consequently, the compressor consumes more power and is noisy (before over-current relay trips).
3. The subcooling degree of refrigerant in liquid form rises (values >4~5K are NOT normal). Consequently, in heating, the temperature of discharge air through the subcooled section becomes lower.

Cooling

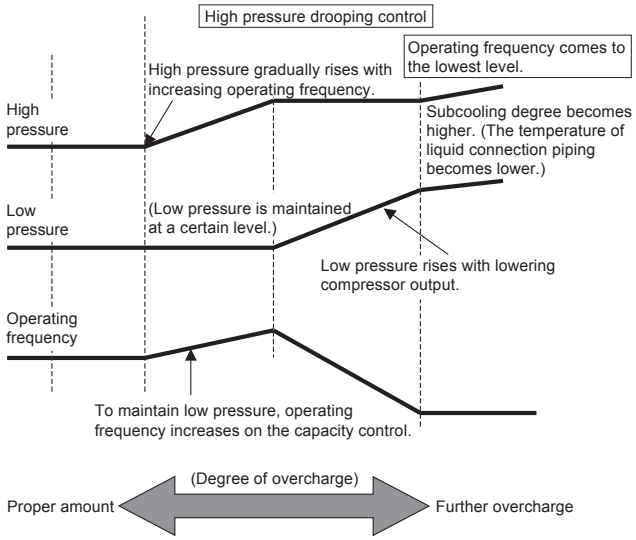

Heating

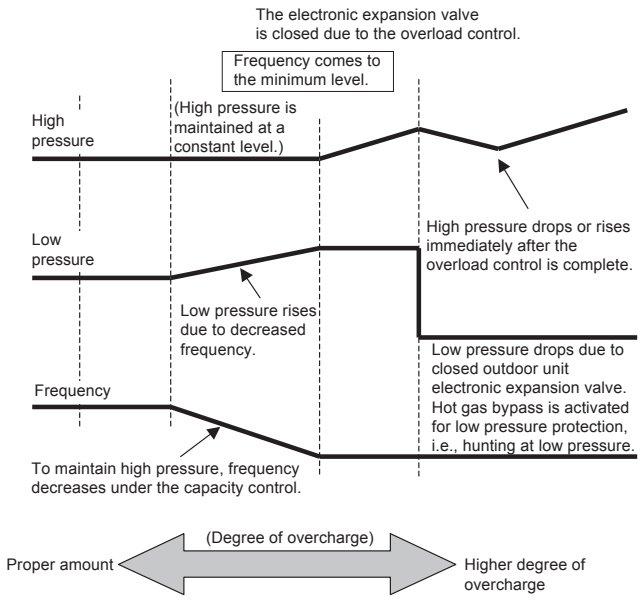

Refrigerant shortage diagnosis

1. The superheated degree of suction gas rises. Consequently, the compressor discharge gas temperature becomes higher than normal.
2. The superheated degree of suction gas rises. Consequently, the electronic expansion valve turns open more than normal or completely open for average output.

3 Low pressure drops to cause the unit not to reach cooling capacity (or heating capacity).

Cooling

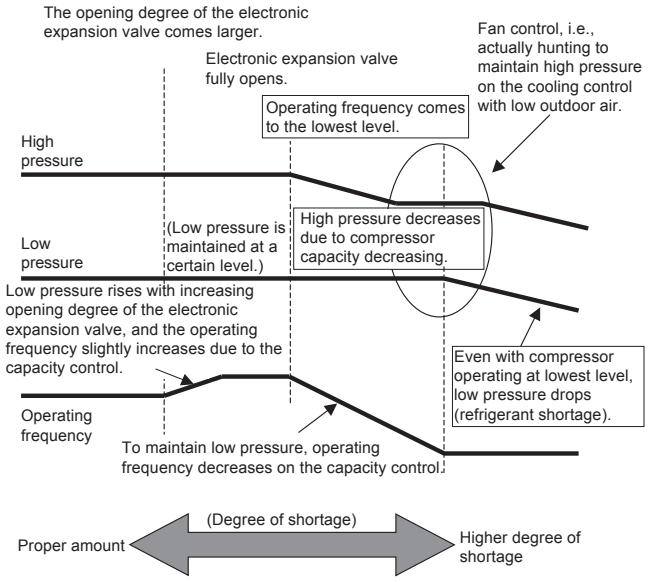

Heating

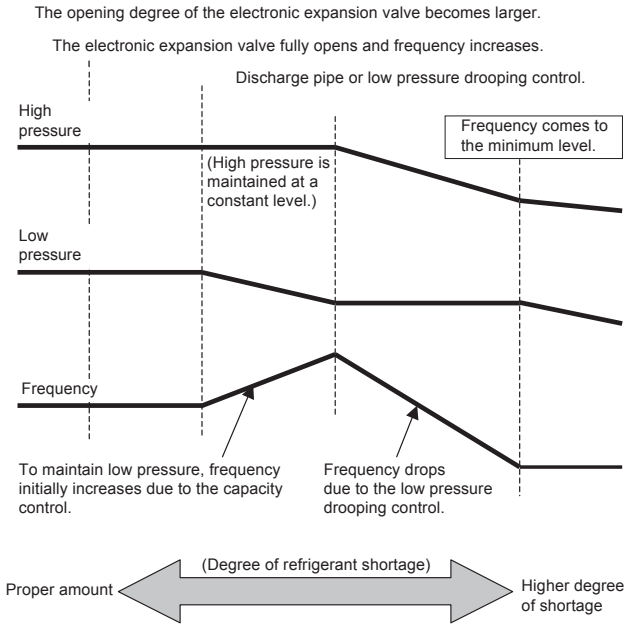

Is the refrigerant circuit charged correctly?	Action
Yes	Return to the troubleshooting of the specific error and continue with the next procedure.
No	Add or recuperate refrigerant until correctly charged, see "4.2.2 Repair procedures" [▸ 311].

To check for non-condensables in the refrigerant circuit

Prerequisite: Stop the unit operation via the central controller.

Prerequisite: Turn OFF the respective circuit breaker.

1 Wait for the refrigerant to reach the outdoor temperature.

2 Connect a manometer to the service port.

3 Measure the pressure of the refrigerant. The measured pressure converted into saturated temperature MUST be in line with the expected pressure / saturated temperature at current ambient temperature.

4 If the measured pressure is significantly higher (>5K), non-condensables gasses are most likely present in the refrigerant.

Any non-condensables found in the refrigerant circuit?	Action
Yes	To replace the refrigerant, see "4.2.2 Repair procedures" [▶ 311].
No	Return to the troubleshooting of the specific error and continue with the next procedure.

To perform a leak test

The leak test must satisfy the specifications of EN378-2.

1 Perform the two leaks tests below.

To check for leaks: Vacuum leak test

1 Evacuate the system from the liquid and gas piping to –100.7 kPa (–1.007 bar) (5 Torr absolute) for more than 2 hours.

2 Once reached, turn off the vacuum pump and check that the pressure does not rise for at least 1 minute.

3 Should the pressure rise, the system may either contain moisture (see vacuum drying below) or have leaks.

To check for leaks: Pressure leak test

1 Test for leaks by applying a bubble test solution to all piping connections.

2 Discharge all nitrogen gas.

3 Break the vacuum by pressurising with nitrogen gas to a minimum gauge pressure of 0.2 MPa (2 bar). Never set the gauge pressure higher than the maximum operation pressure of the unit, i.e. 4.0 MPa (40 bar).

NOTICE

ALWAYS use a recommended bubble test solution from your wholesaler.

NEVER use soap water:

- Soap water may cause cracking of components, such as flare nuts or stop valve caps.
- Soap water may contain salt, which absorbs moisture that will freeze when the piping gets cold.
- Soap water contains ammonia which may lead to corrosion of flared joints (between the brass flare nut and the copper flare).

Problem solved?

Any leaks found in the refrigerant circuit?	Action
Yes	Replace the leaking part of the refrigerant circuit, see "4.2.2 Repair procedures" [▶ 311].

Any leaks found in the refrigerant circuit?	Action
No	Return to the troubleshooting of the specific error and continue with the next procedure.

To check if the refrigerant field piping is compliant with the regulations

1 Check if the refrigerant field piping is compliant with the regulations. Adjust as needed. See installation manual for field piping specifications.

Is the problem solved?	Action
Yes	No further actions required.
No	Return to the troubleshooting of the specific error and continue with the next procedure.

4.2.2 Repair procedures

To open the stop valves of the refrigerant circuit

Prerequisite: Remove the required plate work, see "3.13 Plate work" [▶ 270].

1 Remove the caps.

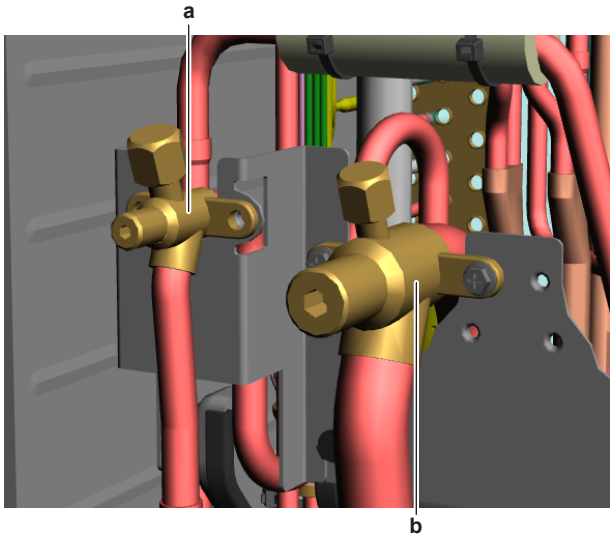

a Liquid stop valve
b Gas stop valve

2 Completely open the stop valves by screwing the stop valve screw counterclockwise.

Is the problem solved?	Action
Yes	No further actions required.
No	Return to the troubleshooting of the specific error and continue with the next procedure.

To replace the clogged/leaking part of the refrigerant circuit

1 See the correct procedure for the component that needs to be repaired. See also "Repair information" [▶ 315] for more details.

Is the problem solved?	Action
Yes	No further actions required.
No	Return to the troubleshooting of the specific error and continue with the next procedure.

To recuperate the refrigerant

Prerequisite: Stop the unit operation via the central controller.

1 Necessary tools:

Service tool		Remark
	Refrigerant recovery unit	Compatible with the refrigerant to be recovered
	Scale	Read-out / 10 grams
	Manifold	Compatible with the refrigerant to be recovered
	Flexible hoses	Compatible with the refrigerant to be recovered
	Recovery cylinder	Compatible with the refrigerant to be recovered

Service tool		Remark
	Vacuum pump	2-stage, equipped with solenoid valve

2 Setup a vacuum line between recovery unit discharge and the recovery bottle. Without this additional setup, the discharge line from the recovery device to the refrigerant cylinder would not have been vacuumed.

3 Connect the vacuum pump, manifold, recovery unit, and refrigerant recovery cylinder to the service ports of the refrigerant circuit as shown below.

For RYMQ-U units

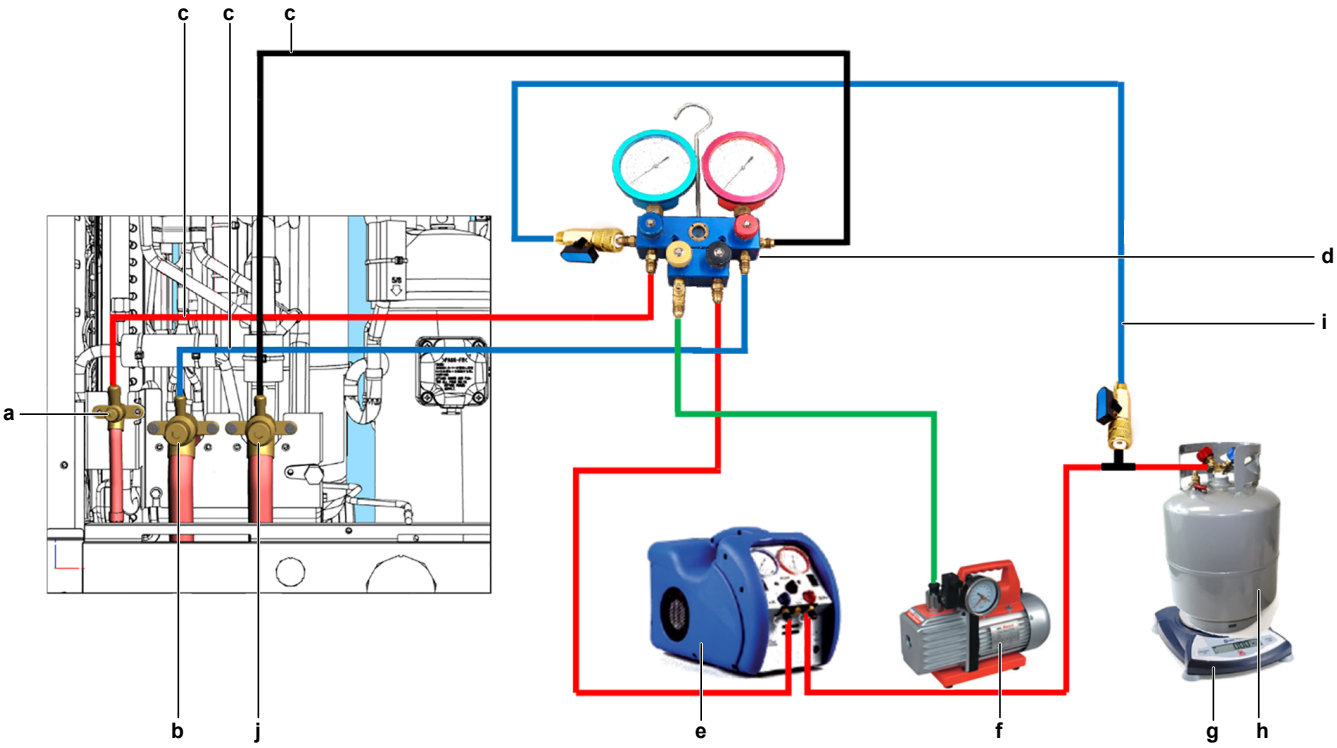

- **a** Liquid service port
- **b** Gas service port
- **c** Flexible hose
- **d** Manifold
- **e** Recovery unit
- **f** Vacuum pump
- **g** Scale
- **h** Recovery cylinder
- **i** Vacuum setup
- **j** Equalizing pipe service port

For RXYQ-U, RXYTQ-U and RYYQ-U units

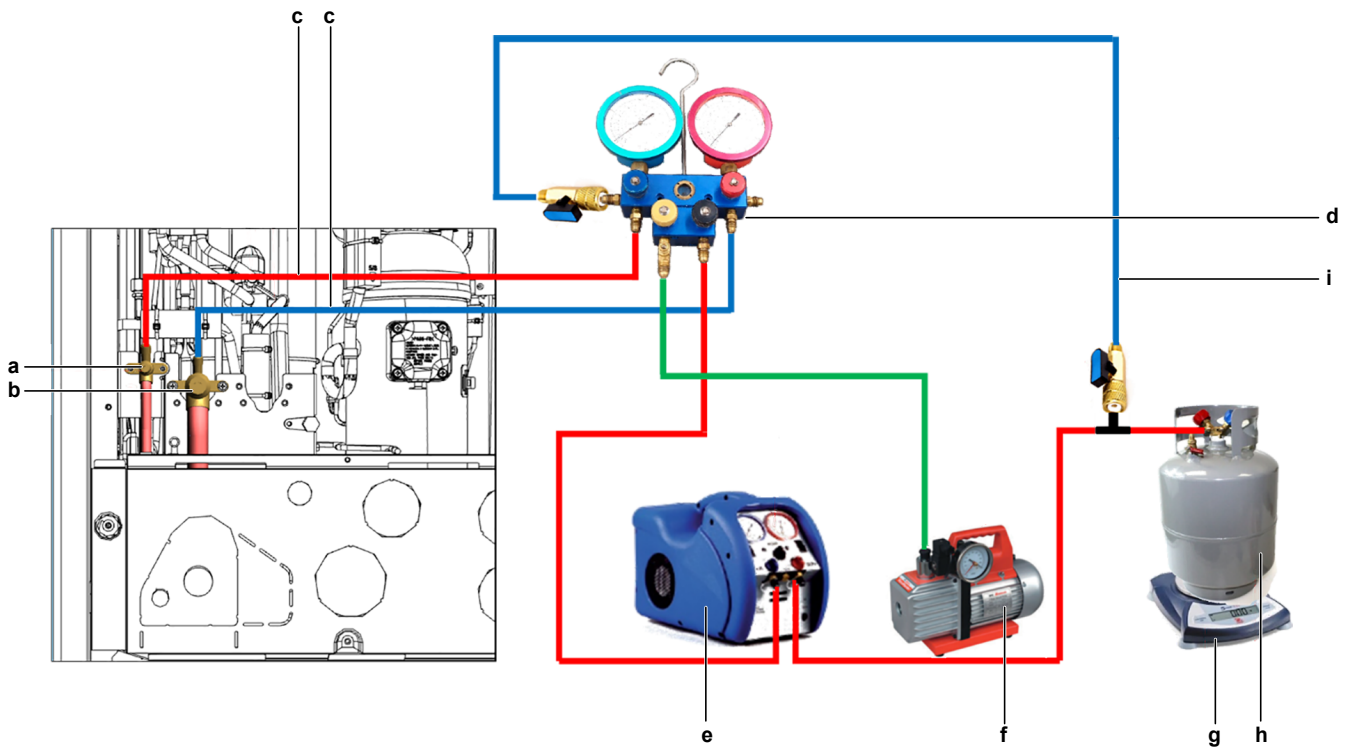

- **a** Liquid service port
- **b** Gas service port
- **c** Flexible hose
- **d** Manifold
- **e** Recovery unit
- **f** Vacuum pump
- **g** Scale
- **h** Recovery cylinder
- **i** Vacuum setup

4 Activate refrigerant recovery / vacuum mode by setting field setting mode 2-21 to 1 (see "6.9 Field settings" [▸ 380]).

To make sure that refrigerant cycle is completely connected and there are no dead-zones because of closed expansion- or solenoid valves, entering the refrigerant recovery / vacuum mode ensures that:

- All indoor unit expansion valves get fully opened,
- all outdoor unit expansion valves get fully opened,
- the necessary solenoid valves get fully opened.

5 To add refrigerant, see "4.2.2 Repair procedures" [▸ 311].

Is the problem solved?	Action
Yes	No further actions required.
No	Return to the troubleshooting of the specific error and continue with the next procedure.

To add refrigerant

1 See the installer reference guide for the correct procedure.

Is the problem solved?	Action
Yes	No further actions required.

Is the problem solved?	Action
No	Return to troubleshooting of the specific error and continue with the next procedure.

Repair information

Refrigerant piping handling

- Make sure that the applied pressure is never higher than the unit design pressure indicated on the nameplate (PS).
- Work according to the F-gas regulation and/or local regulations.
- Make sure the correct amount of refrigerant is charged after repair according to the F-gas regulation label on the unit (factory + additional where required).
- Make sure to use the appropriate equipment and tools according to the refrigerant and unit type.
- Charge non-azeotropic refrigerant (e.g. R410A) always in a liquid state.
- Make sure to use a digital scale (no charging cylinder).
- Execute correct vacuum drying procedure after repair:
  - –0.1 MPa / –760 mm Hg / –750 Torr / –1 bar for at least 1 hour.
  - Connect the unit according to the available service ports.
  - Use related field setting where necessary to open expansion valve / solenoid valve.

Refrigerant piping repair

- Make sure to cover open pipe ends during repair so no dust or moisture can enter.
- Make sure to re-apply insulation removed during repair.
- Pipe expansion / flare making:
  - Remove any burrs on the cut surface using the correct tool such as reamer or scraper (note that excessive deburring can thin the pipe walls and cause cracking of the pipe).
  - Make sure the flare has the correct size (use a flare gauge).
  - Make sure no particles remain in the piping.
  - Apply just a drop of refrigerant oil on the inner surface of the flare.
  - Make sure the flare connection is tightened with the correct torque (torque values refer to installation manual).
- Brazing:
  - Use the correct brazing tool.
  - Use a phosphor copper filler metal (silver composition of 0 to 2%). Do not use flux material.
  - Flush the piping before brazing with nitrogen to avoid oxidation of the inside of the copper tubes (nitrogen purity ≥99.99%).

Additional refrigerant charge amount

1. Once automatic or manual additional refrigerant charge is completed, it is necessary to give input to the outdoor unit over the total additional refrigerant charge amount.
2. Set field setting 2–14 according to the table below. See "6.9 Field settings" [▶ 380].

Mode 2-14	R410A [kg]	Mode 2-14	R410A [kg]	Mode 2-14	R410A [kg]
0	No input	7	30~35	14	65~70
1	0~5	8	35~40	15	70~75
2	5~10	9	40~45	16	75~80
3	10~15	10	45~50	17	80~85
4	15~20	11	50~55	18	85~90
5	20~25	12	55~60		
6	25~30	13	60~65		

3 Even though they can be selected, 2-14 settings 19, 20, and 21 CANNOT be set.

4 Default setting is 0. If set to 0, refrigerant leak check function will NOT be available.

5 If set to 0 and field setting 2-88=0, at the end of the test-run error code U3-02 will indicate that refrigerant leak check function will NOT be available.

4.3 External factors

4.3.1 Checking procedures

To check the outdoor temperature

1 The temperature ranges for the different operation modes of the unit can be found in the databook on Business Portal.

> **INFORMATION**
> If the outdoor temperature is outside the range of operation, the unit may NOT operate or may NOT deliver the required capacity.

> **INFORMATION**
> If difference between the ambient temperature and temperature at air inlet of the outdoor unit heat exchanger is >5 K, consider mounting an air guide at the air discharge outlet of the outdoor unit heat exchanger.

Is the outdoor temperature within the operating range?	Action
Yes	Return to the troubleshooting of the specific error and continue with the next procedure.
No	Wait for the outdoor temperature to return within the operating range.

To check for objects that may block the airflow

1 Check for the presence of object(s) near the indoor unit that may block the airflow. Remove the object(s) as needed.

Is the problem solved?	Action
Yes	No further actions required.

Is the problem solved?	Action
No	Return to the troubleshooting of the specific error and continue with the next procedure.

To check the required space around the outdoor unit heat exchanger

1 Check if the space around the outdoor unit heat exchanger is sufficient. See the installation manual for the required space specifications. Adjust as needed.

Is the problem solved?	Action
Yes	No further actions required.
No	Return to the troubleshooting of the specific error and continue with the next procedure.

To check for an external power source

1 Check for the presence of an external power source. This might cause electrical interference (electrical noise disturbance).

2 If an external power source was found, remove it.

Is the problem solved?	Action
Yes	No further actions required.
No	Return to the troubleshooting of the specific error and continue with the next procedure.

5 Maintenance

NOTICE

General maintenance/inspection checklist. Next to the maintenance instructions in this chapter, a general maintenance/inspection checklist is also available on the Daikin Business Portal (authentication required).

The general maintenance/inspection checklist is complementary to the instructions in this chapter and can be used as a guideline and reporting template during maintenance.

5.1 Maintenance schedule

To ensure optimal availability of the unit, certain checks and inspections on the unit and the field wiring have to be carried out at regular intervals. See the checking procedures in this manual for inspection of the components mentioned below.

The intervals depend on:

- Local legislation,
- the conditions at the installation site (presence of dust, sea salt, harmful gas, oil mist, power supply fluctuation, bumps, vibration etc.),
- how the unit is operated (frequent stop and start, longer operation hours etc.),
- total running hours of the unit,
- ambient conditions (high heat and humidity load etc.)

Depending on the above mentioned factors, maintenance may be required sooner than the mentioned interval here below.

The table below also assumes a unit operation of 10 hours/day and 2500 hours/year.
Normal use of the unit is considered when a unit is not performing the stop/start cycle (Thermo OFF and then ON) more than 6 times/hour.

Component	Inspection	Maintenance
Electric Motor	1 year	20.000 hours
PCB		25.000 hours
Heat Exchanger		5 years
Sensor, Thermistor		5 years
User Interface, Switches		25.000 hours
Drain Pan		8 years
Expansion Valve		20.000 hours
Solenoid Valve		20.000 hours
Air Filter		5 years
High Efficiency Filter		1 year
Fuse		10 years
Crankcase Heater		8 years
Components under pressure		In case of corrosion

Also, the cleaning of air filters, heat exchangers, fan propellers, drain pans etc. has to be carried out at regular intervals, see "5.2 Maintenance procedures for outdoor units" [▸ 319] and "5.3 Maintenance procedures for indoor units" [▸ 321].

5.2 Maintenance procedures for outdoor units

5.2.1 To check the general status of the unit

Prerequisite: Switch off all the indoor units.

Prerequisite: Stop the unit operation via the central controller.

1 Turn OFF the respective circuit breaker.

> **DANGER: RISK OF ELECTROCUTION**
>
> Confirm the rectifier voltage is below 10 V DC before proceeding, see "To prevent electrical hazards" [▸ 299].

2 Clean the cover plates, see "5.2.2 To clean the cover plates" [▸ 320].

3 Check if any other equipment interferes with the operation of the outdoor unit (other device exhaust to outdoor unit heat exchanger, chimney exhaust to outdoor unit, corrosive or explosive ambient, electrical equipment such as antennas, GSM towers, etc…). Refer to the installation manual.

4 Make sure that there is sufficient air flow or no air by-pass on outdoor unit heat exchanger in cooling mode. Refer to installation manual for required space. Even after outdoor unit heat exchanger is cleaned by maintenance, if difference between ambient temperature and air inlet of outdoor unit heat exchanger is 5K or more, consider mounting an air guide at air discharge outlet of the outdoor unit.

5 Prior to cleaning, check for oil drips on the bottom plate. If found, check system for signs of refrigerant shortage, check possible leaking points and repair when necessary. Refer to Repair instructions of the component when necessary.

6 Clean the bottom plate.

7 Clean the inside of the unit.

> **NOTICE**
>
> To clean the inside of the unit:
>
> - Use water or compressed air, not warmer than 50° C.
> - Do not use any cleaning agents or chemicals.
> - Do not use pressurized water.

8 Check the general status inside the cover plates.

9 Check the visual appearance of all the components, including PCBs. Refer to component check methods if any irregularity is found.

10 Check the electrical connections. Tighten and secure the connections when necessary.

11 Check if power supply is in conform with legislation. See "To check if the power supply is compliant with the regulations" [▸ 299].

12 Check and tighten the power supply wiring on the dedicated terminal.

13 Check insulation on piping and refrigerant branches. Replace or fix insulation where necessary.

14 Make sure that the water drain works properly and is not clogged or does not cause any accumulation of water.

15 Clean outdoor unit heat exchanger see "5.2.3 To clean the outdoor unit heat exchanger" [▸ 320].

16 Clean outdoor unit fan propellers.

17 Check latest error codes and latest retries, see "2.2 To retrieve error codes and check error history" [▸ 12].

18 Log the maintenance in the log-book.

After outdoor unit and indoor unit maintenance (see "5.3 Maintenance procedures for indoor units" [▸ 321]) is performed, check the system via the service monitoring tool for normal operation. See "2.4 Symptom based troubleshooting" [▸ 161].

5.2.2 To clean the cover plates

1 Clean the cover plates with a wet cloth.

NOTICE

To clean the plate work:

- Use water or compressed air, not warmer than 50° C.
- Do not use any cleaning agents or chemicals.
- Do not use pressurized water.

5.2.3 To clean the outdoor unit heat exchanger

1 Straighten the hair fins.

2 Clear the outdoor unit heat exchanger from dust, leaves,... using a fin-comb or compressed air/N_2.

CAUTION

Avoid bending or damaging the hair fins of the outdoor unit heat exchanger during the cleaning process.

Do NOT use a high-pressure washer.

Is the problem solved?	Action
Yes	No further actions required.
No	Return to the troubleshooting of the specific error and continue with the next procedure.

5.3 Maintenance procedures for indoor units

5.3.1 To check the general status of the unit

Prerequisite: Stop the unit operation via the central controller.

1. Switch off all the indoor units.
2. Clean the cover plates, see "5.3.2 To clean the cover plates" [▶ 322].
3. Check if any other equipment interferes with the operation of the indoor unit (other device exhaust towards indoor unit heat exchanger, oil mist, water vapour etc, corrosive or explosive ambient, electrical equipment, blocked air outlets or inlets, etc...) Refer to installation manual.
4. Make sure that there is sufficient air flow or no air by-pass on the indoor unit heat exchanger in cooling mode.
5. Check superheat for refrigerant.
   Normally the expansion valve for the indoor unit is driven to keep minimum 3K of superheat.
   If not, even if the filters are cleaned, it might be that:

- the heat exchanger is clogged by dust (see "5.3.3 To clean the indoor unit heat exchanger" [▶ 322]),
- an air by-pass is present,
- the fan cannot deliver discharge air due to longer supply duct,
- expansion valve is malfunctioning (see next step).

6. The best way to judge expansion valve bleeding is to operate indoor units in cooling, set the dedicated indoor unit to Fan only operation and then check refrigerant thermistors by Service Checker. Fan only operated indoor unit sets expansion valve to 0 pulse. If the gas thermistor on the indoor unit is close to evaporation temperature and does not rise to ambient temperature in time, the expansion valve is bleeding and needs to be replaced. Once check is completed switch to other indoor unit and set the operation to Fan only and proceed in similar manner.
7. Clean the inside of the unit.

> **NOTICE**
>
> To clean the inside of the unit:
>
> - Use water or compressed air, not warmer than 50° C.
> - Do not use any cleaning agents or chemicals.
> - Do not use pressurized water.

8. Check the general status inside the cover plates.
9. Check if the drain is properly drained by pouring water in the drain pan. Check drain pan and drain piping if this is not the case.
10. Check the visual appearance of all the components. Refer to component check methods if any irregularity is found.
11. Check the flare connections and their surrounding for oil drips and signs of leaks.
12. Check the electrical connections. Tighten and secure the connections when necessary.
13. Check if power supply is in conform with legislation. See "To check if the power supply is compliant with the regulations" [▶ 299].

14 Check and tighten the power supply wiring on the dedicated terminal.

15 Check the insulation on piping and refrigerant branches. Replace or fix insulation where necessary.

> **INFORMATION**
>
> Depending on the setting of parameter 20-0 on the indoor unit remote controller, a filter sign is indicated on the remote controller (or central controller if present). This indicates that the time that was set by the parameter has passed and filter cleaning is required. For more information, refer to installation manual for the indoor unit.

16 Remove the air filters. Clean the filter with a vacuum cleaner or water or compressed air. When the filter is clogged and too dirty, use a soft brush and natural detergent to clean it. Dry the filter in shade. You may need to remove duct connections for ceiling duct type units. Refer to installation manual for the indoor unit.

17 Make sure there is a filter on the air suction line for the indoor unit. Refer to installation manual for the indoor unit.

> **INFORMATION**
>
> When air filters are not cleaned at regular intervals, dust begins to accumulate on the indoor unit heat exchanger.

18 Check the indoor unit heat exchanger and clean him if necessary, see "5.3.3 To clean the indoor unit heat exchanger" [▸ 322]. Normally this is not a required step if the unit is not exposed to oil mist alike exhaust and when filters are cleaned regularly. To clean the indoor unit heat exchanger it may be necessary to remove bottom plate, side covers, drain pan, fan propeller and fan motor to gain access to the indoor unit heat exchanger.

19 Check wireless remote controller battery (if present).

20 Log the maintenance in the log-book.

After outdoor unit maintenance (see "5.2 Maintenance procedures for outdoor units" [▸ 319]) and indoor unit maintenance is performed, check the system via Service Checker for normal operation. See "2.4 Symptom based troubleshooting" [▸ 161].

5.3.2 To clean the cover plates

1 Clean the cover plates with a wet cloth.

> **NOTICE**
>
> To clean the plate work:
>
> - Use water or compressed air, not warmer than 50° C.
> - Do not use any cleaning agents or chemicals.
> - Do not use pressurized water.

5.3.3 To clean the indoor unit heat exchanger

1 Straighten the hair fins.

2 Clear the indoor unit heat exchanger from dust, … using a fin-comb or compressed air/N_2.

CAUTION

Avoid bending or damaging the hair fins of the indoor unit heat exchanger during the cleaning process.

Is the problem solved?	Action
Yes	No further actions required.
No	Return to the troubleshooting of the specific error and continue with the next procedure.

6 Technical data

6.1 Detailed information setting mode

6.1.1 Detailed information setting mode: Outdoor unit

See the installer reference guide on business portal for more information.

6.1.2 Detailed information setting mode: Remote controller

See the installer reference guide on business portal for more information.

6.2 Wiring diagram

6.2.1 Wiring diagram: Outdoor unit

Refer to the wiring diagram sticker on the unit. The abbreviations used are listed below:

> **INFORMATION**
>
> The wiring diagram on the outdoor unit is only for the outdoor unit. For the indoor unit or optional electrical components, refer to the wiring diagram of the indoor unit.

1 This wiring diagram applies only to the outdoor unit.

2 Symbols (see below).

3 When using the optional adapter, refer to the installation manual of the optional adapter

4 For connection wiring to indoor–outdoor transmission F1-F2, outdoor-outdoor transmission F1-F2, outdoor-multi transmission Q1-Q2, refer to the installation manual.

5 How to use BS1~BS3 switch, refer to the "Service Precaution" label on the electrical component box cover.

6 When operating, do NOT short-circuit the protection devices (S1PH).

7 Only for RYYQ model

8 Only for RYYQ/RYMQ model

9 For 8~12 HP: Connector X1A (M1F) is white, connector X2A (M2F) is red.

9 For 14~20 HP: Colours (see below).

10 Colours (see below).

Symbols:

	Field wiring
	Terminal block
	Connector
	Terminal
	Protective earth
	Noiseless earth
	Earth wiring
	Field supply
	PCB
	Switch box
	Option

Colours:

BLK	Black
RED	Red

BLU	Blue
WHT	White
GRN	Green

Legend for wiring diagram 8~12 HP:

A1P	Printed circuit board (main)
A2P	Printed circuit board (noise filter)
A3P	Printed circuit board (inverter)
A4P	Printed circuit board (fan)
A5P	Printed circuit board (ABC I/P) (option)
BS1~BS3 (A1P)	Push button switch (MODE, SET, RETURN)
C* (A3P)	Capacitor
DS1, DS2 (A1P)	DIP switch
E1HC	Crankcase heater
E3H	Drain pan heater (option)
F1U, F2U (A1P)	Fuse (T 3.15 A / 250 V)
F3U	Field fuse
F101U (A4P)	Fuse
F401U, F403U (A2P)	Fuse
F601U, (A3P)	Fuse
HAP (A*P)	Pilot lamp (service monitor is green)
K3R (A3P)	Magnetic relay
K4R (A1P)	Magnetic relay (Y1S)
K5R (A1P)	Magnetic relay (Y2S)
K6R (A1P)	Magnetic relay (E3H)
K7R (A1P)	Magnetic relay (E1HC)
K9R (A1P)	Magnetic relay (Y3S)
K11R (A1P)	Magnetic relay (Y5S)
L1R	Reactor
M1C	Motor (compressor)
M1F	Motor (fan)
PS (A1P, A3P)	Switching power supply
Q1DI	Earth leakage circuit breaker (field supply)
Q1LD (A1P)	Earth current detector (field supply)
R24 (A4P)	Resistor (current sensor)
R300 (A3P)	Resistor (current sensor)
R1T	Thermistor (air)
R3T	Thermistor (accumulator)

R4T	Thermistor (heat exchanger, liquid pipe)
R5T	Thermistor (subcool liquid pipe)
R6T	Thermistor (heat exchanger, gas pipe)
R7T	Thermistor (heat exchanger, de-icer)
R8T	Thermistor (M1C body)
R21T	Thermistor (M1C discharge)
S1NPH	Pressure sensor (high)
S1NPL	Pressure sensor (low)
S1PH	Pressure switch (discharge)
SEG1~SEG3 (A1P)	7-segment display
T1A	Current sensor
V1D (A3P)	Diode
V1R (A3P, A4P)	Power module
X*A	Connector
X1M (A1P)	Terminal block (control)
X1M (A5P)	Terminal block (power supply)(option)
Y1E	Electronic expansion valve (main)
Y2E	Electronic expansion valve (sub-cool)
Y3E	Electronic expansion valve (liquid cooling)
Y4E	Electronic expansion valve (storage vessel)
Y1S	Solenoid valve (main)
Y2S	Solenoid valve (accumulator oil return)
Y3S	Solenoid valve (oil 1)
Y5S	Solenoid valve (subcool)
Z*C	Noise filter (ferrite core)
Z*F (A2P, A5P)	Noise filter (with surge absorber)

Connectors for optional accessories:

X10A	Connector (drainpan heater)
X37A	Connector (power adapter)
X66A	Connector (remote switching COOL/HEAT selector)

Legend for wiring diagram 14~20 HP:

A1P	Printed circuit board (main)
A2P, A5P	Printed circuit board (noise filter)
A3P, A6P	Printed circuit board (inverter)
A4P, A7P	Printed circuit board (fan)
A8P	Printed circuit board (ABC I/P) (option)

BS1~BS3 (A1P)	Push button switch (MODE, SET, RETURN)
C* (A3P, A6P)	Capacitor
DS1 , DS2 (A1P)	DIP switch
E1HC	Crankcase heater
E3H	Drain pan heater (option)
F1U, F2U (A1P)	Fuse (T 3.15 A / 250 V)
F3U	Field fuse
F101U (A4P, A7P)	Fuse
F401U, F403U (A2P, A5P)	Fuse
F601U, (A3P, A6P)	Fuse
HAP (A*P)	Pilot lamp (service monitor is green)
K3R (A3P, A6P)	Magnetic relay
K3R (A1P)	Magnetic relay (Y4S)
K4R (A1P)	Magnetic relay (Y1S)
K5R (A1P)	Magnetic relay (Y2S)
K6R (A1P)	Magnetic relay (E3H)
K7R (A1P)	Magnetic relay (E1HC)
K8R (A1P)	Magnetic relay (E2HC)
K9R (A1P)	Magnetic relay (Y3S)
K11R (A1P)	Magnetic relay (Y5S)
L1R, L2R	Reactor
M1C, M2C	Motor (compressor)
M1F, M2F	Motor (fan)
PS (A1P, A3P, A6P)	Switching power supply
Q1DI	Earth leakage circuit breaker (field supply)
Q1LD (A1P)	Earth current detector (field supply)
R24 (A4P, A7P)	Resistor (current sensor)
R300 (A3P, A6P)	Resistor (current sensor)
R1T	Thermistor (air)
R3T	Thermistor (accumulator)
R4T	Thermistor (heat exchanger, liquid pipe)
R5T	Thermistor (subcool liquid pipe)
R6T	Thermistor (heat exchanger, gas pipe)
R7T	Thermistor (heat exchanger, de-icer)

R8T, R9T	Thermistor (M1C, M2C body)
R21T, R22T	Thermistor (M1C, M2C discharge)
S1NPH	Pressure sensor (high)
S1NPL	Pressure sensor (low)
S1PH, S2PH	Pressure switch (discharge)
SEG1~SEG3 (A1P)	7-segment display
T1A	Current sensor
V1D (A3P)	Diode
V1R (A3P, A4P, A6P, A7P)	Power module
X*A	Connector
X1M (A1P)	Terminal block (control)
X1M (A8P)	Terminal block (power supply)(option)
Y1E	Electronic expansion valve (main)
Y2E	Electronic expansion valve (sub-cool)
Y3E	Electronic expansion valve (liquid cooling)
Y4E	Electronic expansion valve (storage vessel)
Y1S	Solenoid valve (main)
Y2S	Solenoid valve (accumulator oil return)
Y3S	Solenoid valve (oil 1)
Y4S	Solenoid valve (oil 2)
Y5S	Solenoid valve (subcool)
Z*C	Noise filter (ferrite core)
Z*F (A2P)	Noise filter (with surge absorber)

Connectors for optional accessories:

X10A	Connector (drainpan heater)
X37A	Connector (power adapter)
X66A	Connector (remote switching COOL/HEAT selector)

6.3 Piping diagram

6.3.1 Piping diagram: Outdoor unit

Piping diagram: RYYQ8~12

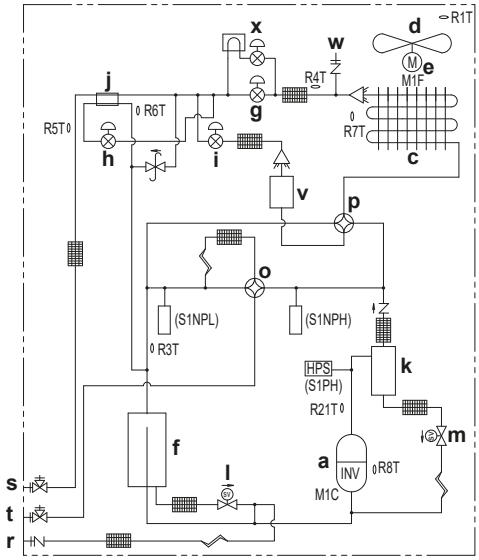

a	Compressor (M1C)	**m**	Solenoid valve, oil1 (Y3S)
b	Compressor (M2C)	**n**	Solenoid valve, oil2 (Y4S)
c	Heat exchanger	**o**	4-way valve, main (Y1S)
d	Fan	**p**	4-way valve, sub (Y5S)
e	Fan motor (M1F, M2F)	**q**	Electrical component box
f	Accumulator	**r**	Service port, refrigerant charge
g	Expansion valve, main (Y1E)	**s**	Stop valve, liquid
h	Expansion valve, subcool heat exchanger (Y2E)	**t**	Stop valve, gas
i	Expansion valve, storage vessel (Y4E)	**u**	Stop valve, equalising gas
j	Subcool heat exchanger	**v**	Heat accumulation element
k	Oil separator	**w**	Service port
l	Solenoid valve, oil accumulator (Y2S)	**x**	Expansion valve, liquid cooling (Y3E)

Piping diagram: RYYQ14~20

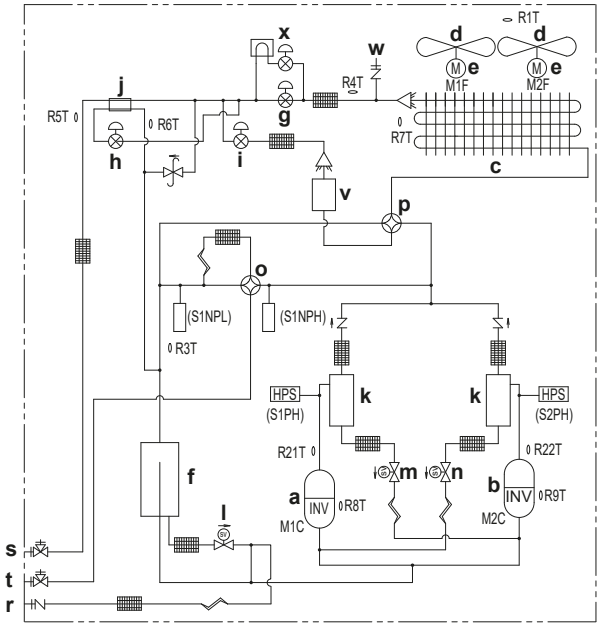

a	Compressor (M1C)	**m**	Solenoid valve, oil1 (Y3S)
b	Compressor (M2C)	**n**	Solenoid valve, oil2 (Y4S)
c	Heat exchanger	**o**	4-way valve, main (Y1S)
d	Fan	**p**	4-way valve, sub (Y5S)
e	Fan motor (M1F, M2F)	**q**	Electrical component box
f	Accumulator	**r**	Service port, refrigerant charge
g	Expansion valve, main (Y1E)	**s**	Stop valve, liquid
h	Expansion valve, subcool heat exchanger (Y2E)	**t**	Stop valve, gas
i	Expansion valve, storage vessel (Y4E)	**u**	Stop valve, equalising gas
j	Subcool heat exchanger	**v**	Heat accumulation element
k	Oil separator	**w**	Service port
l	Solenoid valve, oil accumulator (Y2S)	**x**	Expansion valve, liquid cooling (Y3E)

Piping diagram: RYMQ8~12

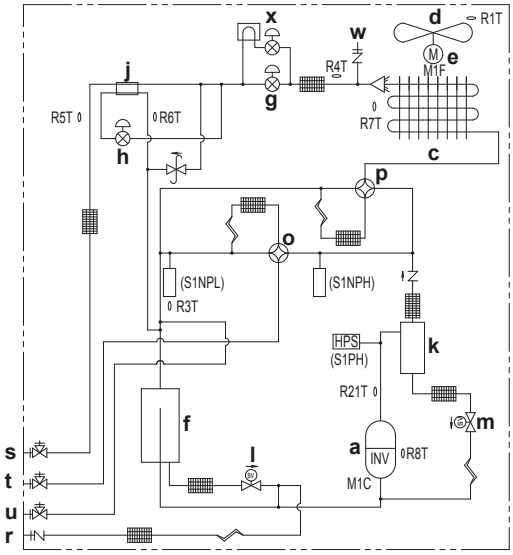

a	Compressor (M1C)	**m**	Solenoid valve, oil1 (Y3S)
b	Compressor (M2C)	**n**	Solenoid valve, oil2 (Y4S)
c	Heat exchanger	**o**	4-way valve, main (Y1S)
d	Fan	**p**	4-way valve, sub (Y5S)
e	Fan motor (M1F, M2F)	**q**	Electrical component box
f	Accumulator	**r**	Service port, refrigerant charge
g	Expansion valve, main (Y1E)	**s**	Stop valve, liquid
h	Expansion valve, subcool heat exchanger (Y2E)	**t**	Stop valve, gas
i	Expansion valve, storage vessel (Y4E)	**u**	Stop valve, equalising gas
j	Subcool heat exchanger	**v**	Heat accumulation element
k	Oil separator	**w**	Service port
l	Solenoid valve, oil accumulator (Y2S)	**x**	Expansion valve, liquid cooling (Y3E)

Piping diagram: RYMQ14~20

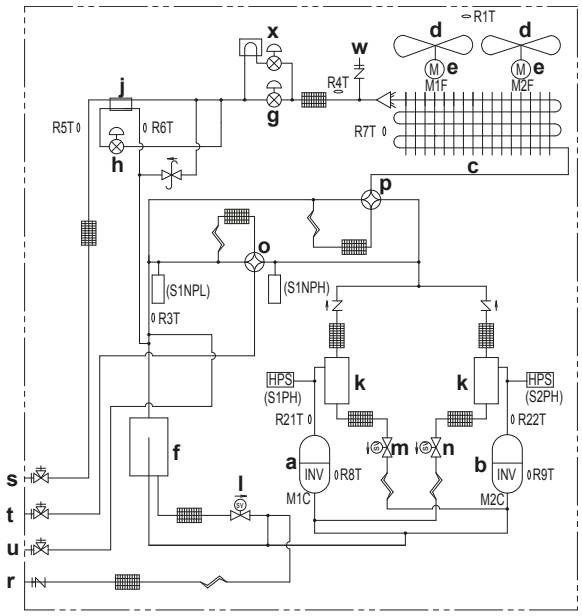

a	Compressor (M1C)	**m**	Solenoid valve, oil1 (Y3S)
b	Compressor (M2C)	**n**	Solenoid valve, oil2 (Y4S)
c	Heat exchanger	**o**	4-way valve, main (Y1S)
d	Fan	**p**	4-way valve, sub (Y5S)
e	Fan motor (M1F, M2F)	**q**	Electrical component box
f	Accumulator	**r**	Service port, refrigerant charge
g	Expansion valve, main (Y1E)	**s**	Stop valve, liquid
h	Expansion valve, subcool heat exchanger (Y2E)	**t**	Stop valve, gas
i	Expansion valve, storage vessel (Y4E)	**u**	Stop valve, equalising gas
j	Subcool heat exchanger	**v**	Heat accumulation element
k	Oil separator	**w**	Service port
l	Solenoid valve, oil accumulator (Y2S)	**x**	Expansion valve, liquid cooling (Y3E)

Piping diagram: RXYQ8~12

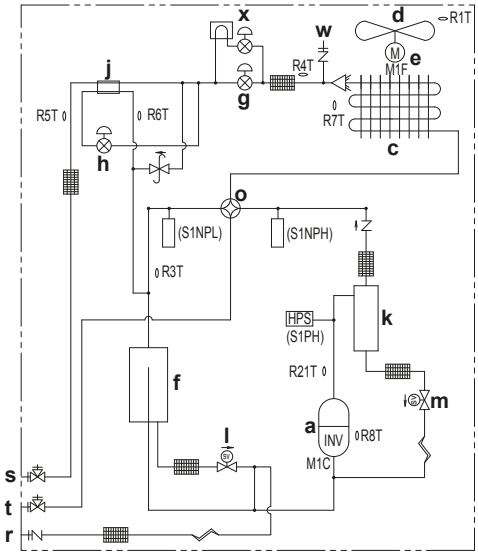

a	Compressor (M1C)	**m**	Solenoid valve, oil1 (Y3S)
b	Compressor (M2C)	**n**	Solenoid valve, oil2 (Y4S)
c	Heat exchanger	**o**	4-way valve, main (Y1S)
d	Fan	**p**	4-way valve, sub (Y5S)
e	Fan motor (M1F, M2F)	**q**	Electrical component box
f	Accumulator	**r**	Service port, refrigerant charge
g	Expansion valve, main (Y1E)	**s**	Stop valve, liquid
h	Expansion valve, subcool heat exchanger (Y2E)	**t**	Stop valve, gas
i	Expansion valve, storage vessel (Y4E)	**u**	Stop valve, equalising gas
j	Subcool heat exchanger	**v**	Heat accumulation element
k	Oil separator	**w**	Service port
l	Solenoid valve, oil accumulator (Y2S)	**x**	Expansion valve, liquid cooling (Y3E)

Piping diagram: RXYQ14~20

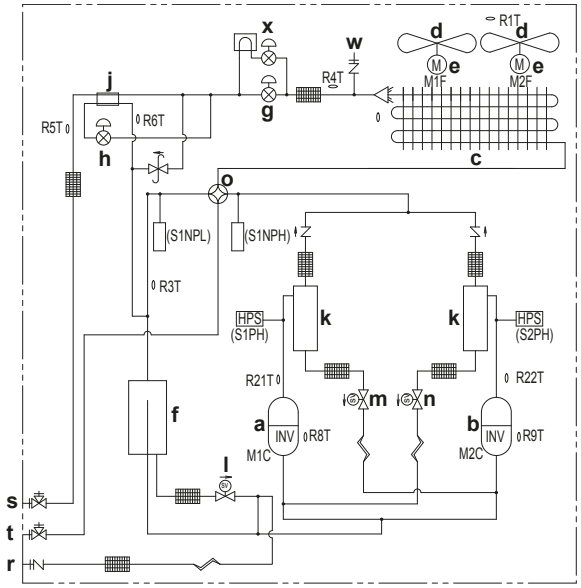

a	Compressor (M1C)	**m**	Solenoid valve, oil1 (Y3S)
b	Compressor (M2C)	**n**	Solenoid valve, oil2 (Y4S)
c	Heat exchanger	**o**	4-way valve, main (Y1S)
d	Fan	**p**	4-way valve, sub (Y5S)
e	Fan motor (M1F, M2F)	**q**	Electrical component box
f	Accumulator	**r**	Service port, refrigerant charge
g	Expansion valve, main (Y1E)	**s**	Stop valve, liquid
h	Expansion valve, subcool heat exchanger (Y2E)	**t**	Stop valve, gas
i	Expansion valve, storage vessel (Y4E)	**u**	Stop valve, equalising gas
j	Subcool heat exchanger	**v**	Heat accumulation element
k	Oil separator	**w**	Service port
l	Solenoid valve, oil accumulator (Y2S)	**x**	Expansion valve, liquid cooling (Y3E)

Piping diagram: RXYTQ8

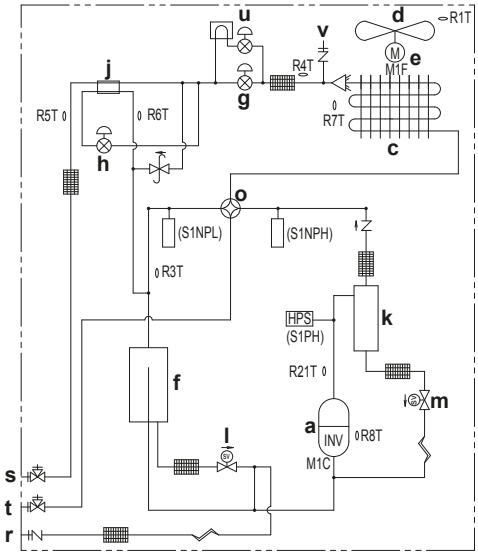

a	Compressor (M1C)	**l**	Solenoid valve, oil accumulator (Y2S)
b	Compressor (M2C)	**m**	Solenoid valve, oil1 (Y3S)
c	Heat exchanger	**n**	Solenoid valve, oil2 (Y4S)
d	Fan	**o**	4-way valve, main (Y1S)
e	Fan motor (M1F, M2F)	**p**	4-way valve, sub (Y5S)
f	Accumulator	**q**	Electrical component box
g	Expansion valve, main (Y1E)	**r**	Service port, refrigerant charge
h	Expansion valve, subcool heat exchanger (Y2E)	**s**	Stop valve, liquid
i	Expansion valve, storage vessel (Y4E)	**t**	Stop valve, gas
j	Subcool heat exchanger	**u**	Expansion valve, liquid cooling (Y3E)
k	Oil separator	**v**	Service port

Piping diagram: RXYTQ10+12

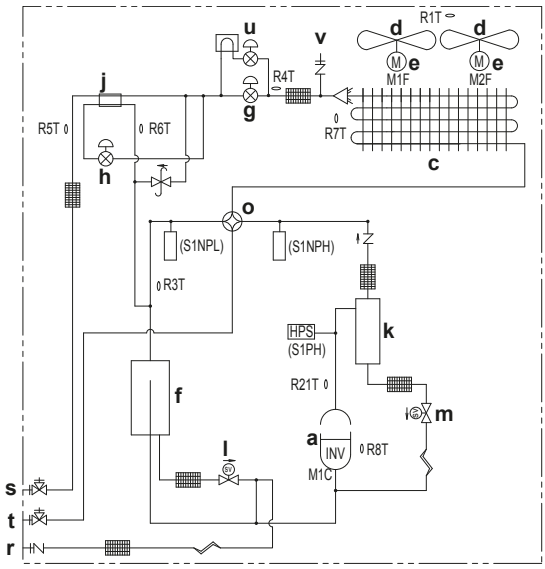

a	Compressor (M1C)	**l**	Solenoid valve, oil accumulator (Y2S)
b	Compressor (M2C)	**m**	Solenoid valve, oil1 (Y3S)
c	Heat exchanger	**n**	Solenoid valve, oil2 (Y4S)
d	Fan	**o**	4-way valve, main (Y1S)
e	Fan motor (M1F, M2F)	**p**	4-way valve, sub (Y5S)
f	Accumulator	**q**	Electrical component box
g	Expansion valve, main (Y1E)	**r**	Service port, refrigerant charge
h	Expansion valve, subcool heat exchanger (Y2E)	**s**	Stop valve, liquid
i	Expansion valve, storage vessel (Y4E)	**t**	Stop valve, gas
j	Subcool heat exchanger	**u**	Expansion valve, liquid cooling (Y3E)
k	Oil separator	**v**	Service port

Piping diagram: RXYTQ14+16

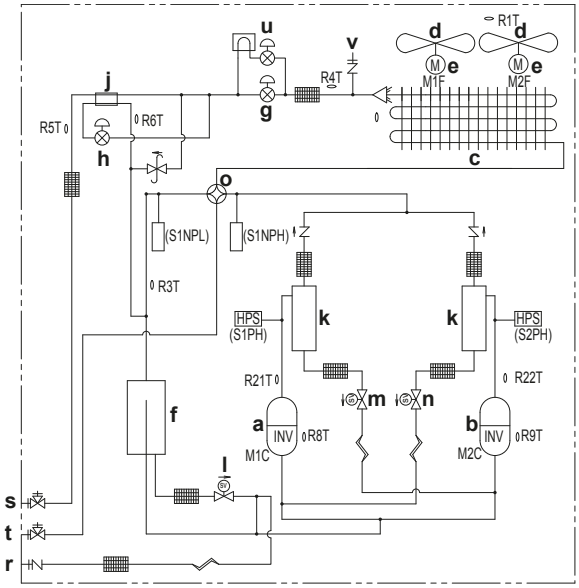

a	Compressor (M1C)	**l**	Solenoid valve, oil accumulator (Y2S)
b	Compressor (M2C)	**m**	Solenoid valve, oil1 (Y3S)
c	Heat exchanger	**n**	Solenoid valve, oil2 (Y4S)
d	Fan	**o**	4-way valve, main (Y1S)
e	Fan motor (M1F, M2F)	**p**	4-way valve, sub (Y5S)
f	Accumulator	**q**	Electrical component box
g	Expansion valve, main (Y1E)	**r**	Service port, refrigerant charge
h	Expansion valve, subcool heat exchanger (Y2E)	**s**	Stop valve, liquid
i	Expansion valve, storage vessel (Y4E)	**t**	Stop valve, gas
j	Subcool heat exchanger	**u**	Expansion valve, liquid cooling (Y3E)
k	Oil separator	**v**	Service port

Component functionalities

Symbol	Component	Major function
M1C	Compressor	Inverter driven compressor operates in multi-steps according to T_e for cooling and T_c for heating.
M2C	Compressor	Inverter driven compressor operates in multi-steps according to T_e for cooling and T_c for heating.
M1F	Fan motor	When outdoor coil is used as condenser, the fan operation is controlled by T_c, in heating mode the fan operates in full steps.
M2F	Fan motor	When outdoor coil is used as condenser, the fan operation is controlled by T_c, in heating mode the fan operates in full steps.
Y1E	Electronic expansion valve (main)	In cooling: Fully open when compressor runs. In heating: PI (proportional integral) control to keep superheat constant.
Y2E	Electronic expansion valve (sub-cool)	PI (proportional integral) control to keep outlet superheat on sub-cool heat exchanger.
Y3E	Electronic expansion valve (liquid cooling)	Controls the amount of refrigerant flowing through the cooling plate that cools PCB.
Y4E	Electronic expansion valve (storage vessel) – only for RYYQ-U	Controls refrigerant flow through heat exchanger of the storage vessel during heating (used as sub-condenser) and during defrost (used as main evaporator). Not used in cooling mode.
Y1S	4-way valve	Switches operation mode between cooling and heating.
Y2S	Solenoid valve (accumulator oil return)	Controls amount of oil return from accumulator to compressor.
Y3S	Solenoid valve (oil separator 1 oil return)	Controls amount of oil return from oil separator to compressor.
Y4S	Solenoid valve (oil separator 2 oil return)	Controls amount of oil return from oil separator to compressor.
Y5S	4-way valve (sub) – only for RYYQ-U and RYMQ-U	Switch between outdoor heat exchanger and Phase Changing Material (PCM) vessel (for RYYQ-U). Switch the condition of outdoor unit heat exchanger as condenser or evaporator (for RYMQ-U)
S1NPH	Pressure sensor (high)	Detects discharge pressure. In cooling: mainly to control fan speed of outdoor unit. In heating: mainly to control compressor capacity.

Symbol	Component	Major function
S1NPL	Pressure sensor (low)	Detects suction pressure. In cooling: mainly to control compressor capacity. In heating: mainly for the calculation of suction superheat.
S1PH	Pressure switch (high, M1C discharge)	Prevents excess high pressure during malfunction. Stops operation when triggered.
S2PH	Pressure switch (high, M2C discharge)	Prevents excess high pressure during malfunction. Stops operation when triggered.
R1T	Thermistor (air)	Detects ambient temperature. Used for correction of discharge temperature and judging defrost condition.
R21T	Thermistor (M1C discharge)	Detects discharge temperature of the compressor
R22T	Thermistor (M2C discharge)	Detects discharge temperature of the compressor
R3T	Thermistor (accumulator)	Detects gas inlet temperature of accumulator. Mainly used to keep suction superheat constant during heating operation.
R4T	Thermistor (heat exchanger, liquid pipe)	Detects liquid pipe temperature of outdoor coil. Mainly used to determine sub-cool during auto-charge, test-run, leak test and over-charge judgement during test-run.
R5T	Thermistor (subcool, liquid pipe)	Detects liquid pipe temperature of outdoor unit to indoor units. Mainly used to calculate sub-cool.
R6T	Thermistor (heat exchanger, gas pipe)	Detects sub-cool heat exchanger outlet temperature on sub-cool line. Used to keep the sub-cool heat exchanger outlet superheat constant.
R7T	Thermistor (Heat Exchanger, De-icer)	Detects liquid pipe temperature of outdoor heat exchanger. Used to judge defrost ON and defrost OFF operation.
R8T	Thermistor (M1C body)	Detects compressor body temperature. Acts as safety for overheated operation of compressor.
R9T	Thermistor (M2C body)	Detects compressor body temperature. Acts as safety for overheated operation of compressor.
	Liquid service port	Service port – liquid pipe to field liquid piping
	Gas service port	Service port – gas pipe to field gas piping
	Refrigerant charge port	Service port
	Equalizing pipe port – only for RYMQ-U	Service port – equalizing pipe to other RYMQ-U unit

Symbol	Component	Major function
	Accumulator	Serves as a storage for not-required refrigerant at partial capacity. Prevents liquid back to the compressor.
	Pressure regulating valve	During transportation, storage or stand-still, if pressure > 4.0 MPa, this valve opens to balance pressure inside the unit, to prevent any equipment damage due to pressure increase.
	Double-tube heat exchanger (subcool heat exchanger)	Sub-cools liquid refrigerant in cooling mode.
	Heat sink (PCB)	Cools the PCB, through cooling plate, cooled by refrigerant.
	Storage vessel – only for RYYQ-U	Phase Changing Material (PCM) Vessel stores heat during heating cycle. When absorbs heat, PCM becomes liquid. During defrost, PCM Vessel is used as evaporator and PCM becomes solid when releases heat.

6.3.2 Refrigerant flow diagram

RYYQ-U / Cooling mode

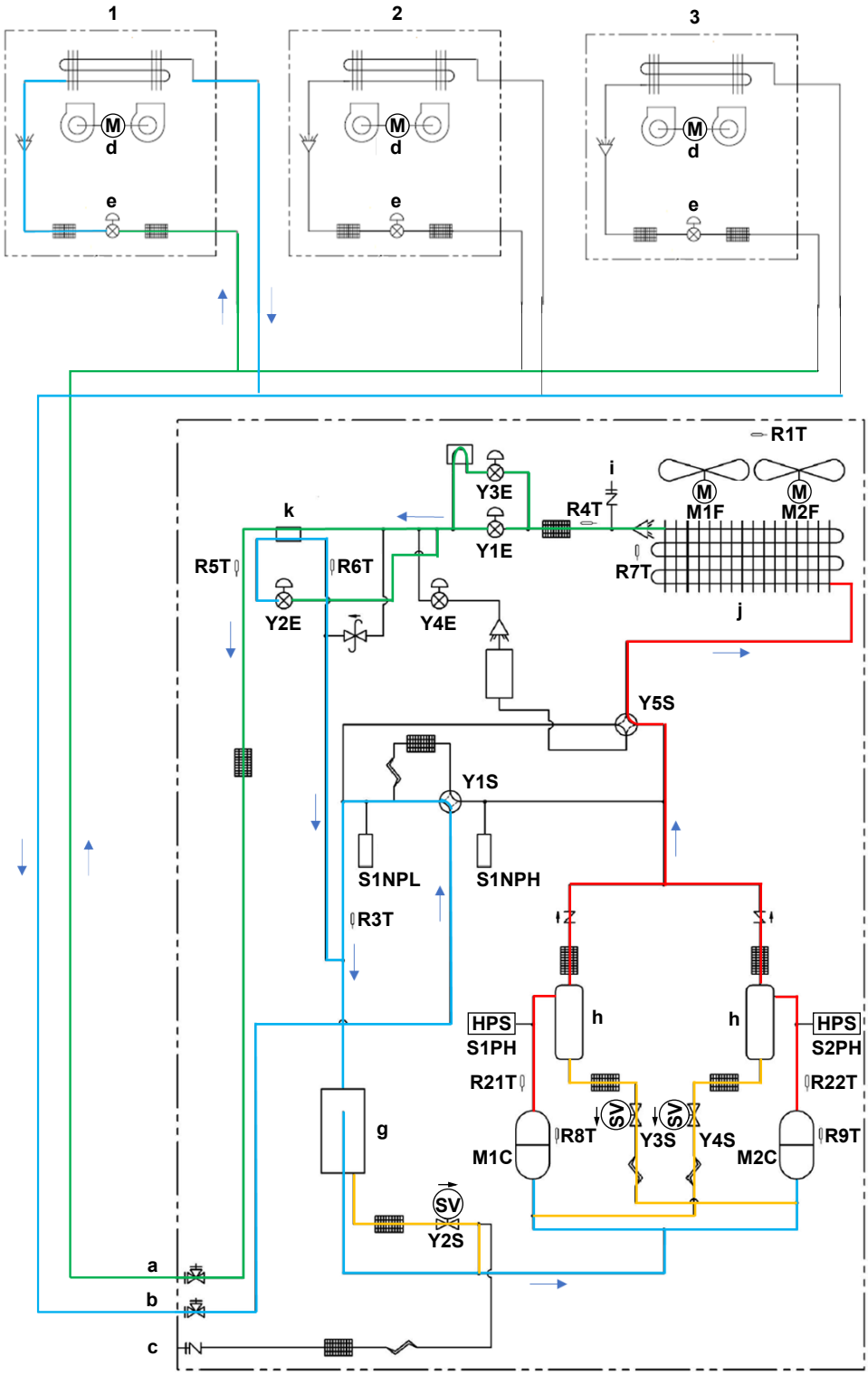

Indoor unit 1: Operation ON, Thermo ON, Fan ON, Expansion valve: normal control
Indoor unit 2: Operation OFF, Fan OFF, Expansion valve: closed (0 pulse)
Indoor unit 3: Operation ON, Thermo OFF, Fan ON, Expansion valve: closed (0 pulse)

RYYQ-U / Oil return operation in cooling mode

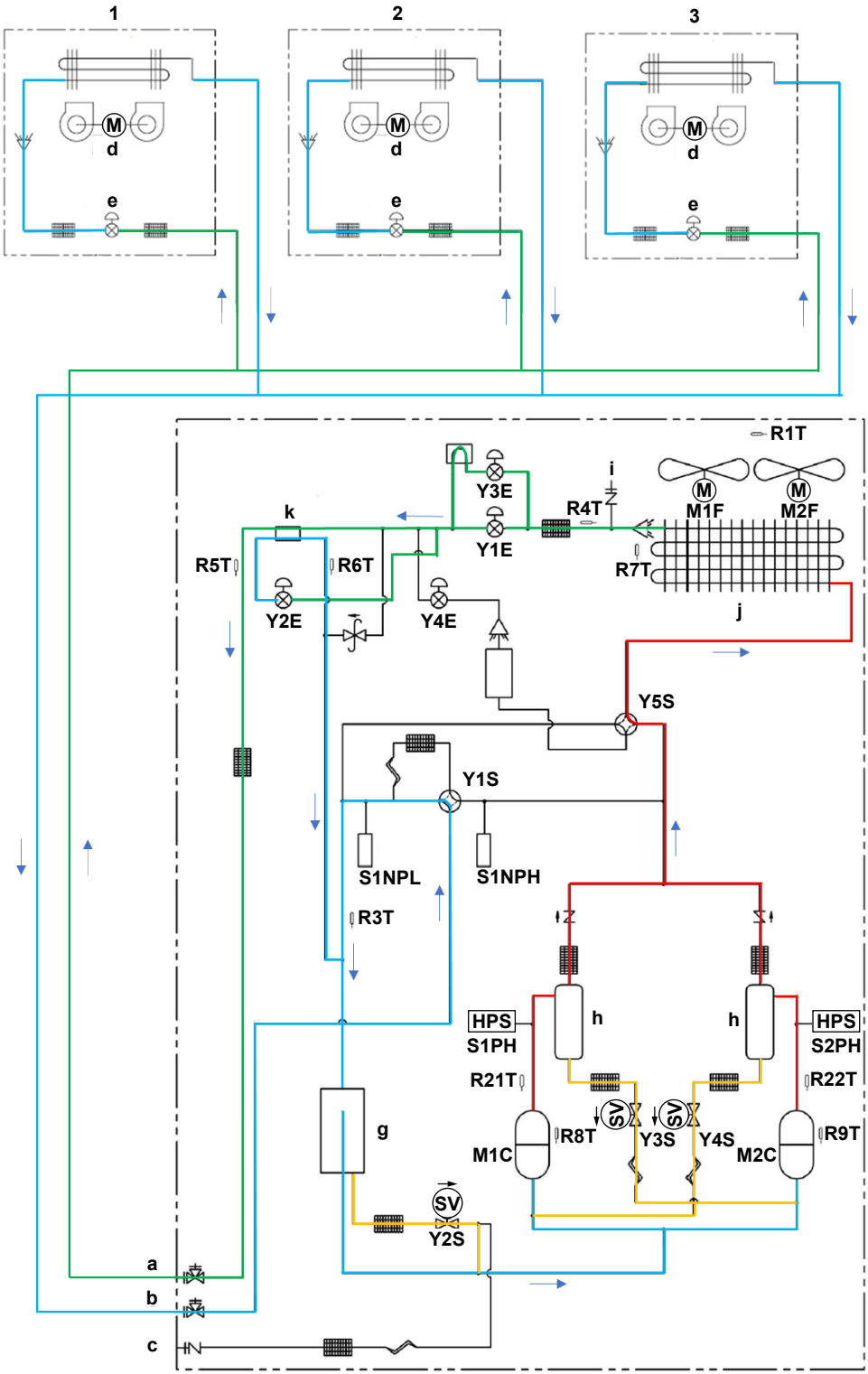

Indoor unit 1: Operation ON, Thermo ON, Fan ON, Expansion valve: normal control
Indoor unit 2: Operation OFF, Fan OFF, Expansion valve: 224 pulses
Indoor unit 3: Operation ON, Thermo OFF, Fan ON, Expansion valve: normal control

RYYQ-U / Heating mode and oil return operation in heating mode

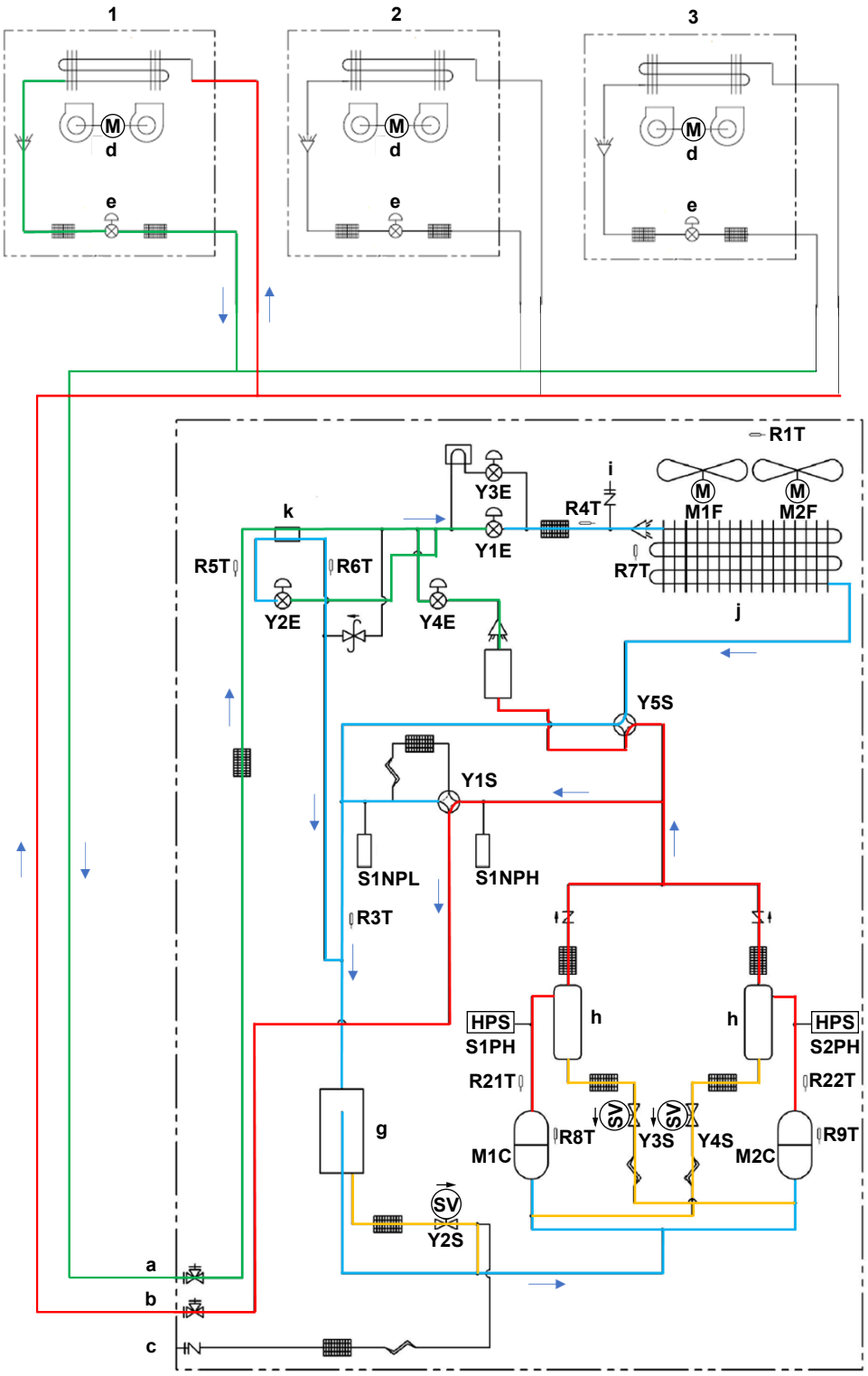

Indoor unit 1: Operation ON, Thermo ON, Fan ON, Expansion valve: normal control
Indoor unit 2: Operation OFF, Fan OFF, Expansion valve: average subcool control
Indoor unit 3: Operation ON, Thermo OFF, Fan ON, Expansion valve: average subcool control

RYYQ-U / Defrost operation

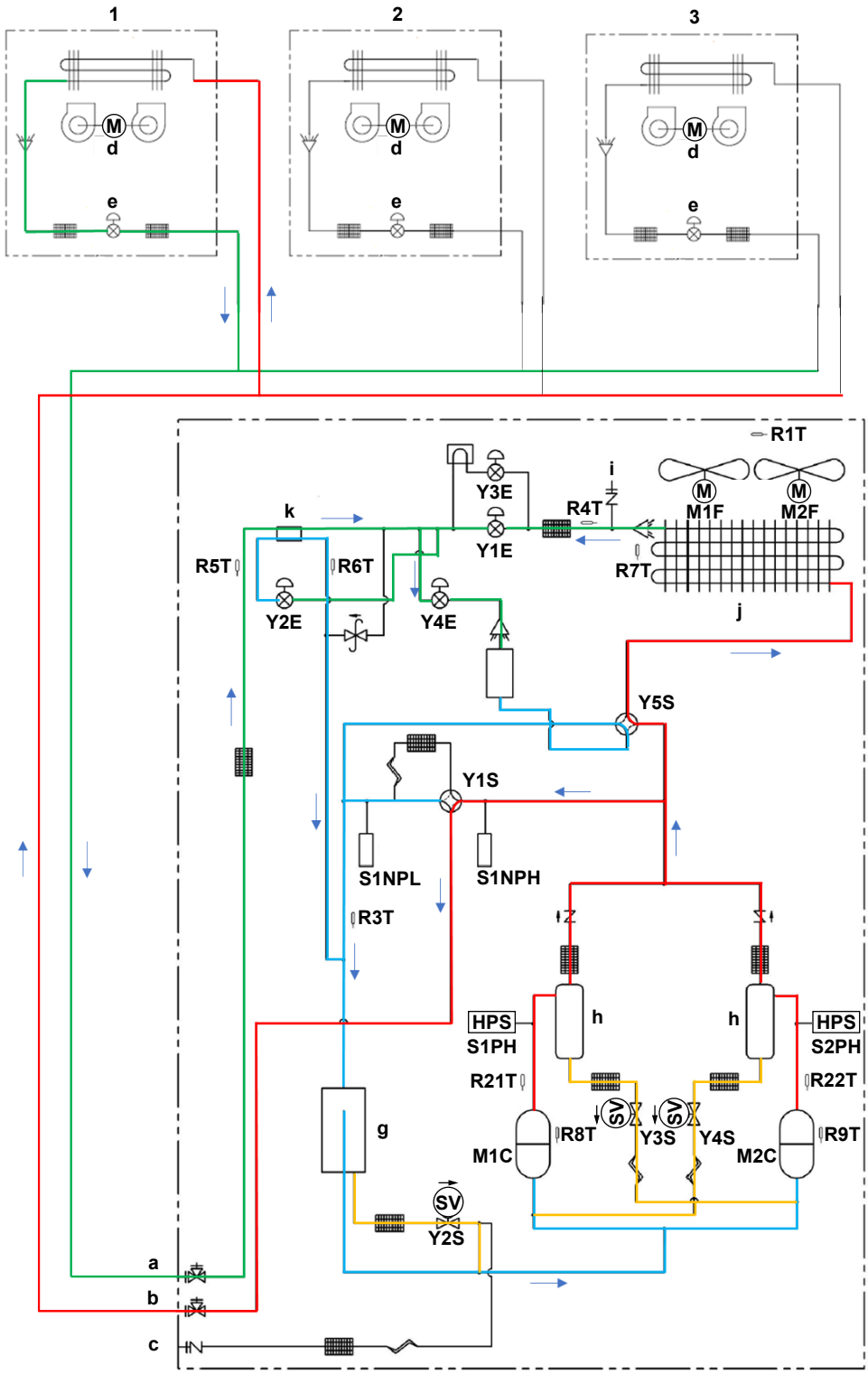

Indoor unit 1: Operation ON, Thermo ON, Fan ON, Expansion valve: normal control
Indoor unit 2: Operation OFF, Fan OFF, Expansion valve: closed (0 pulse)
Indoor unit 3: Operation ON, Thermo OFF, Fan ON, Expansion valve: closed (0 pulse)

RXYQ-U + RXYTQ-U / Cooling mode

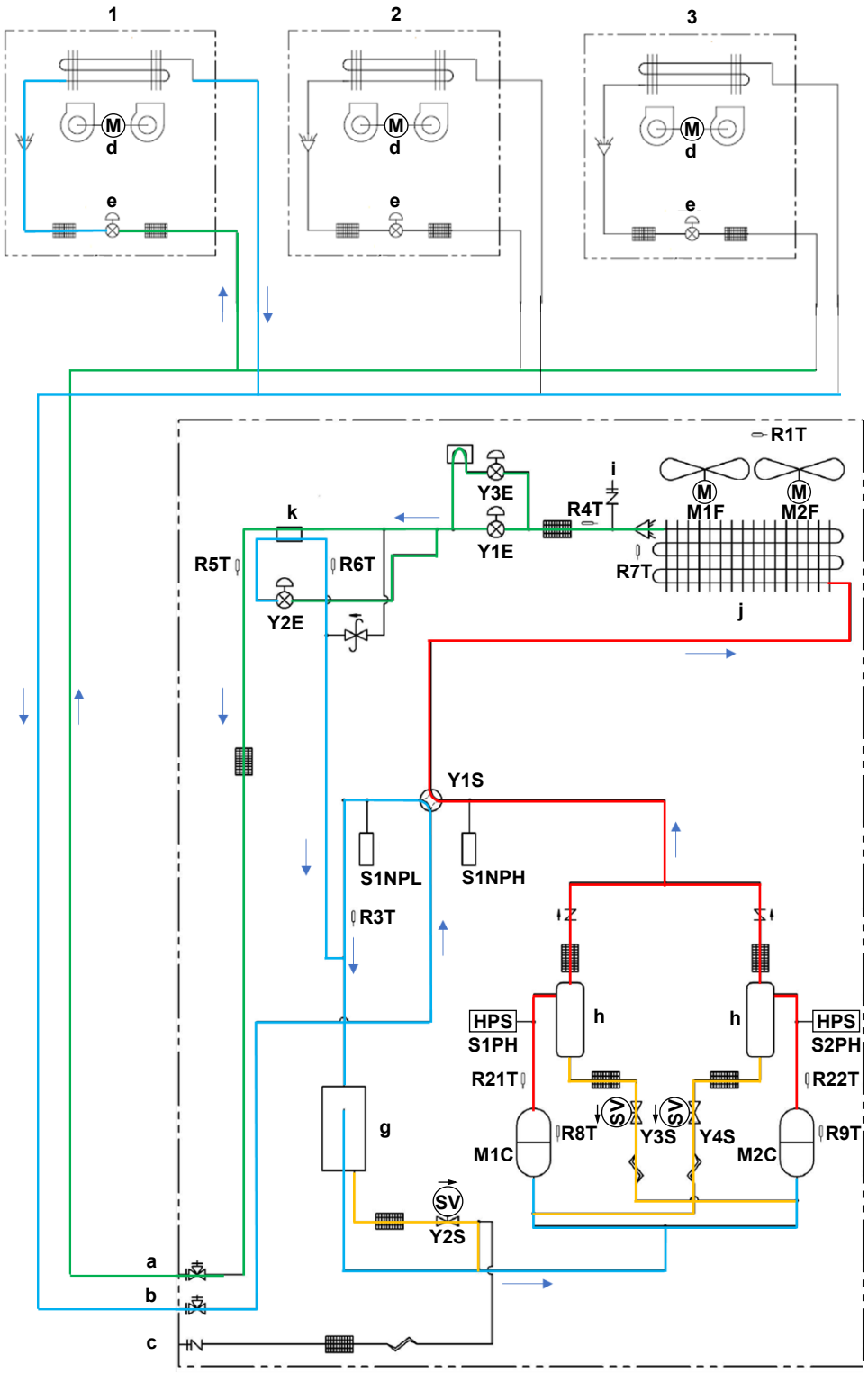

Indoor unit 1: Operation ON, Thermo ON, Fan ON, Expansion valve: normal control
Indoor unit 2: Operation OFF, Fan OFF, Expansion valve: closed (0 pulse)
Indoor unit 3: Operation ON, Thermo OFF, Fan ON, Expansion valve: closed (0 pulse)

RXYQ-U + RXYTQ-U / Oil return operation in cooling mode

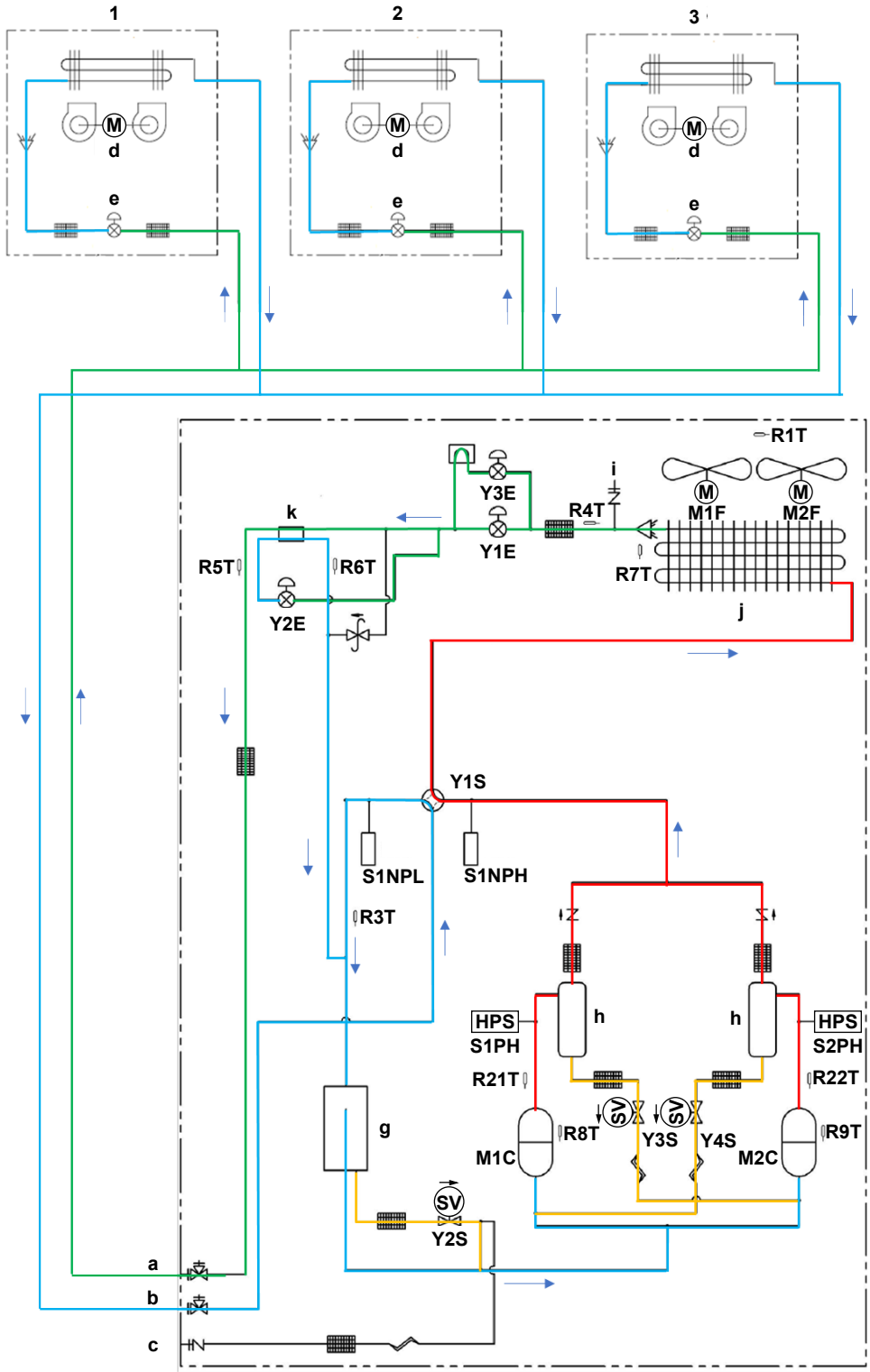

Indoor unit 1: Operation ON, Thermo ON, Fan ON, Expansion valve: normal control
Indoor unit 2: Operation OFF, Fan OFF, Expansion valve: 224 pulses
Indoor unit 3: Operation ON, Thermo OFF, Fan ON, Expansion valve: normal control

RXYQ-U + RXYTQ-U / Heating mode

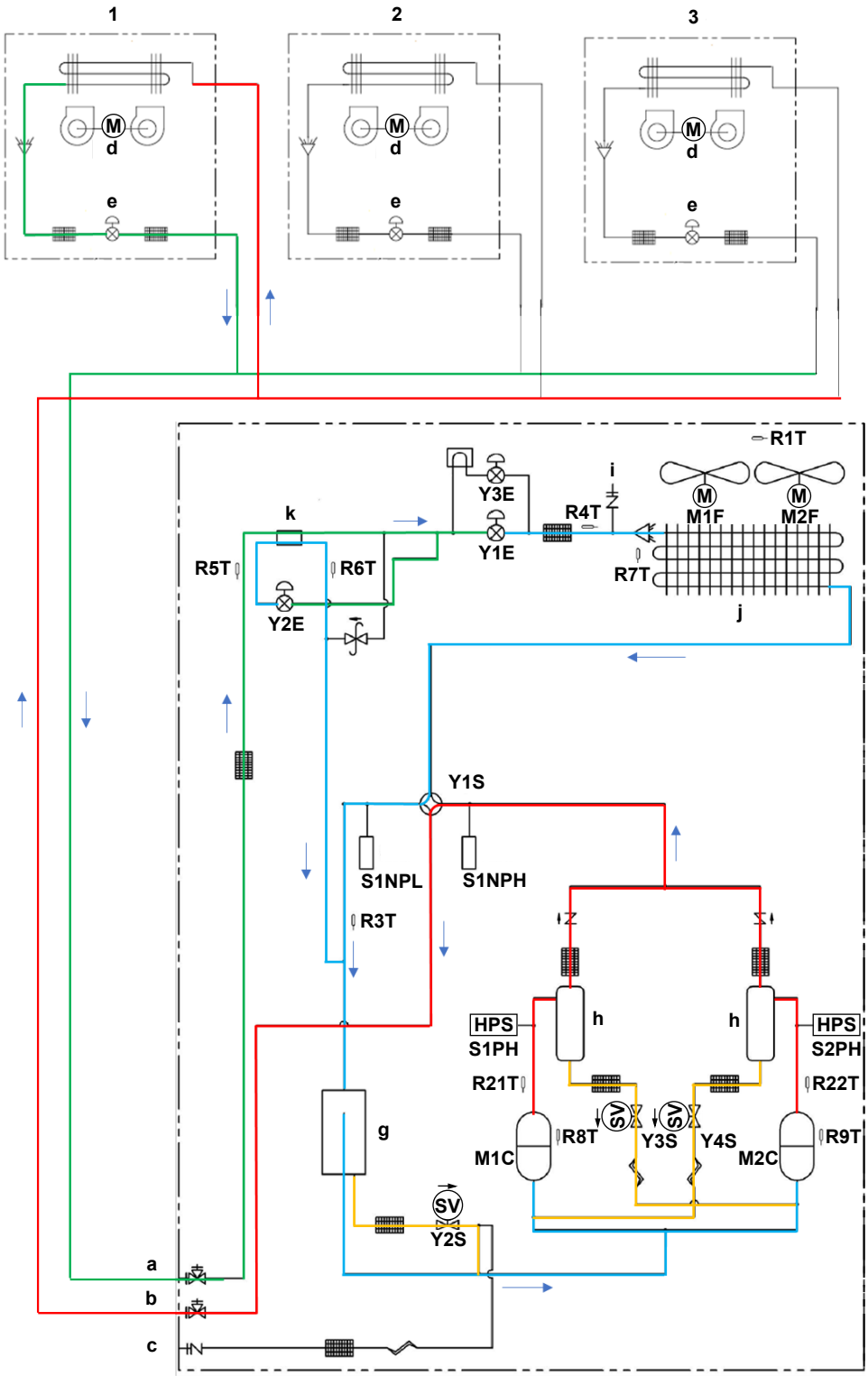

Indoor unit 1: Operation ON, Thermo ON, Fan ON, Expansion valve: normal control
Indoor unit 2: Operation OFF, Fan OFF, Expansion valve: average subcool control
Indoor unit 3: Operation ON, Thermo OFF, Fan ON, Expansion valve: average subcool control

RXYQ-U + RXYTQ-U / Oil return operation and defrost operation in heating mode

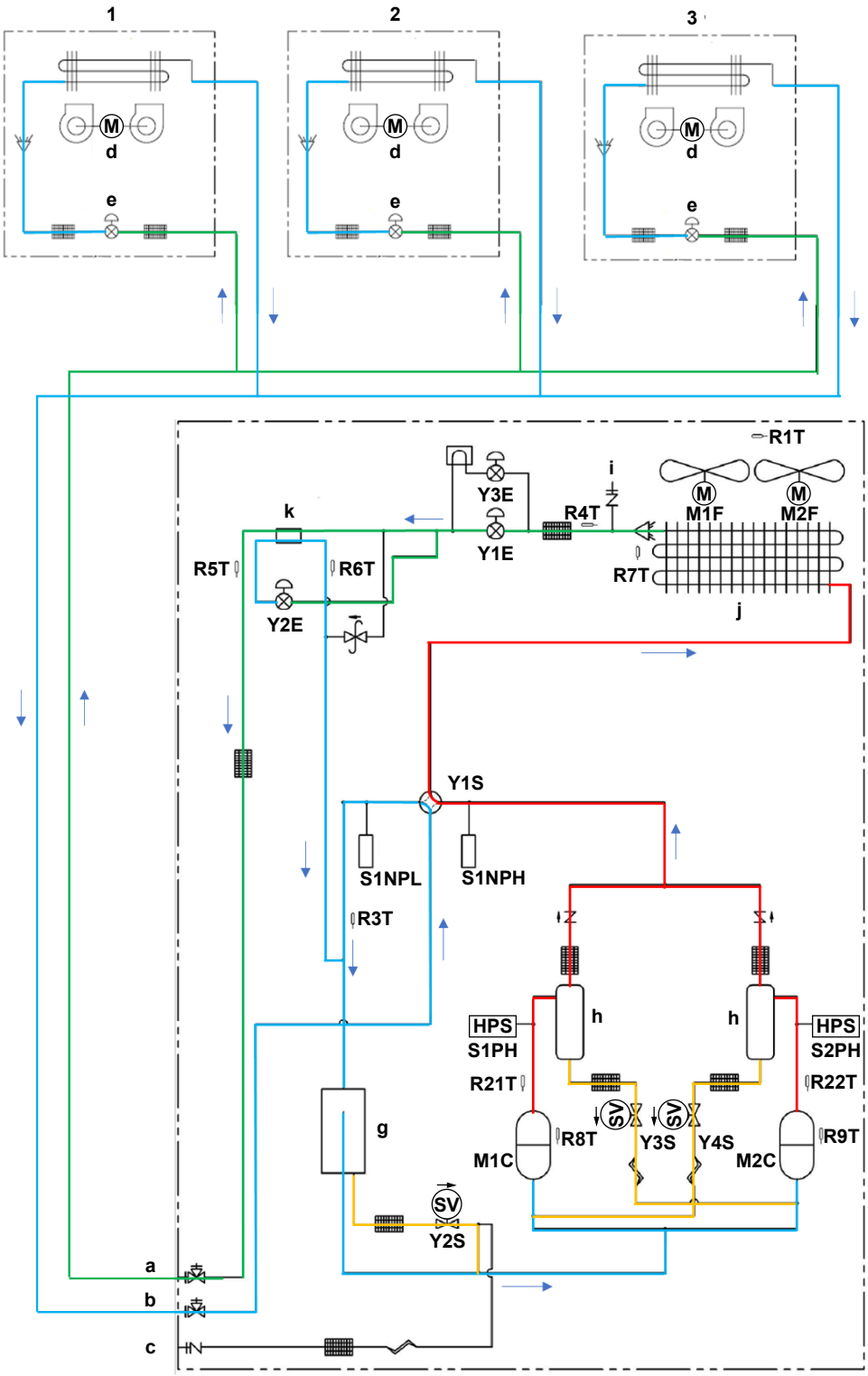

Indoor unit 1: Operation ON, Thermo ON, Fan ON, Expansion valve: 416 pulses
Indoor unit 2: Operation OFF, Fan OFF, Expansion valve: 256 pulses
Indoor unit 3: Operation ON, Thermo OFF, Fan ON, Expansion valve: 416 pulses

RYMQ-U / Cooling mode

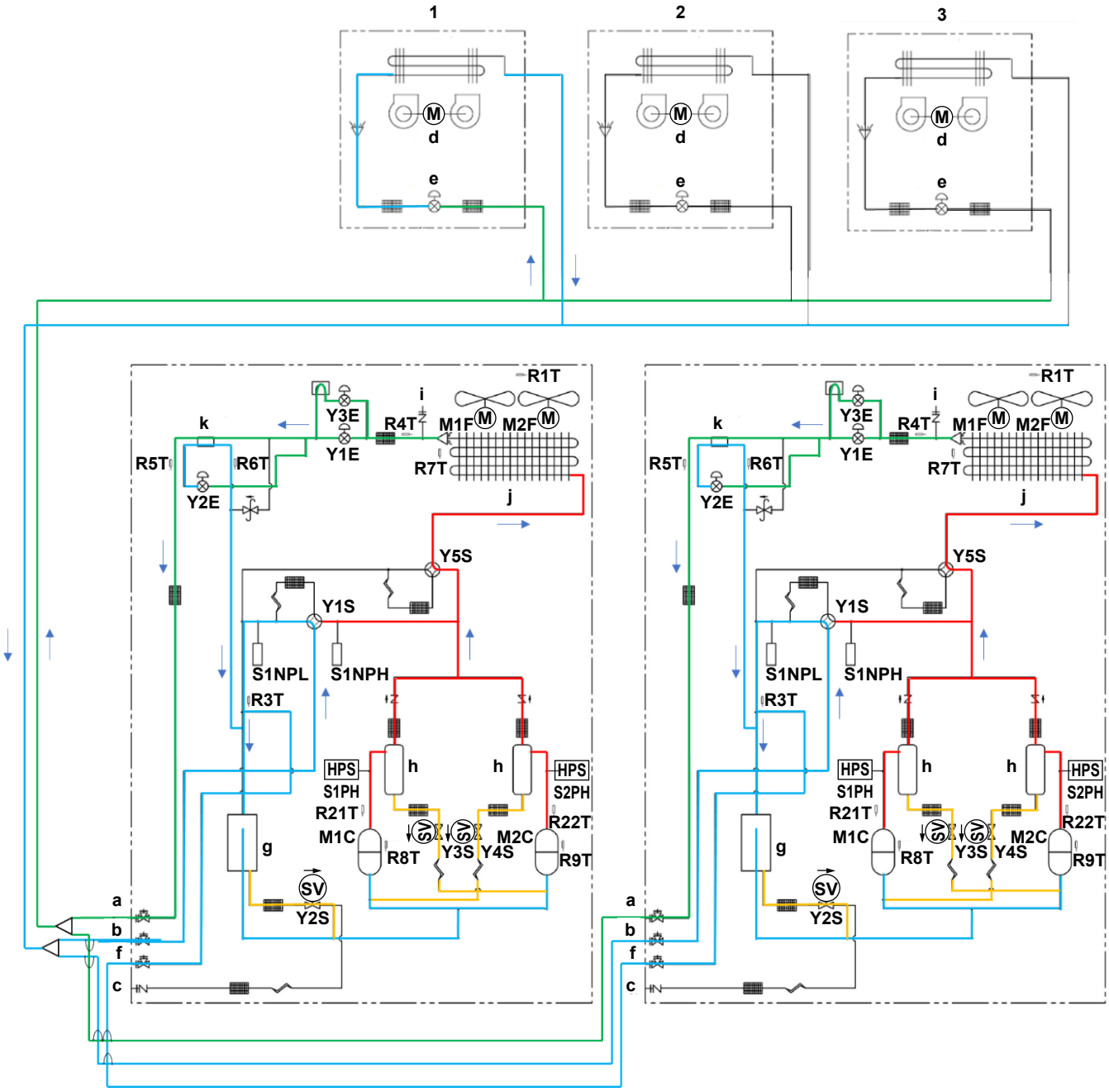

Indoor unit 1: Operation ON, Thermo ON, Fan ON, Expansion valve: normal control
Indoor unit 2: Operation OFF, Fan OFF, Expansion valve: closed (0 pulse)
Indoor unit 3: Operation ON, Thermo OFF, Fan ON, Expansion valve: closed (0 pulse)

RYMQ-U / Oil return operation in cooling mode

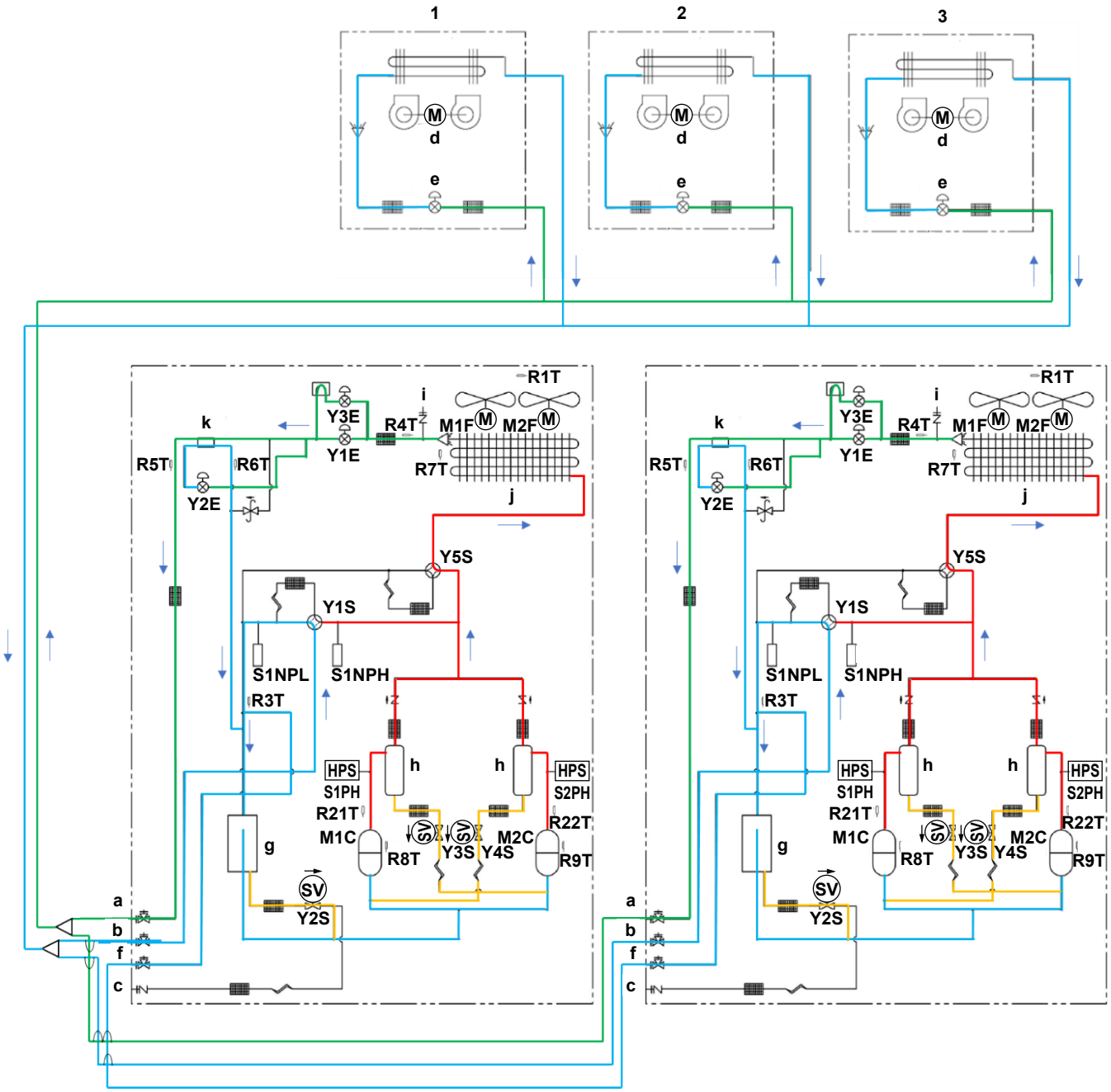

Indoor unit 1: Operation ON, Thermo ON, Fan ON, Expansion valve: normal control
Indoor unit 2: Operation OFF, Fan OFF, Expansion valve: 224 pulses
Indoor unit 3: Operation ON, Thermo OFF, Fan ON, Expansion valve: normal control

RYMQ-U / Heating mode and oil return in heating mode

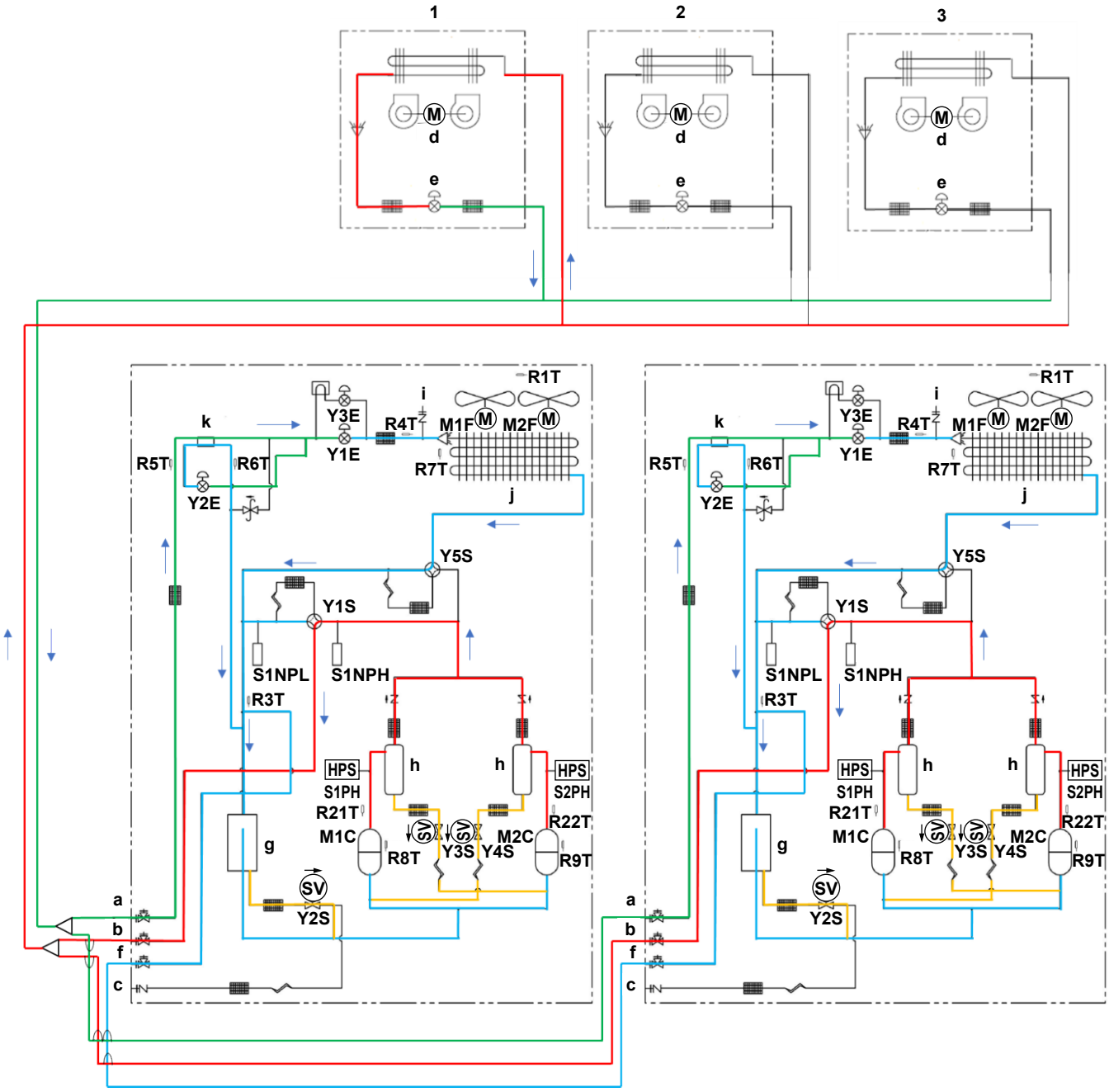

Indoor unit 1: Operation ON, Thermo ON, Fan ON, Expansion valve: normal control
Indoor unit 2: Operation OFF, Fan OFF, Expansion valve: average subcool ontrol
Indoor unit 3: Operation ON, Thermo OFF, Fan ON, average subcool control

RYMQ-U / Defrost operation

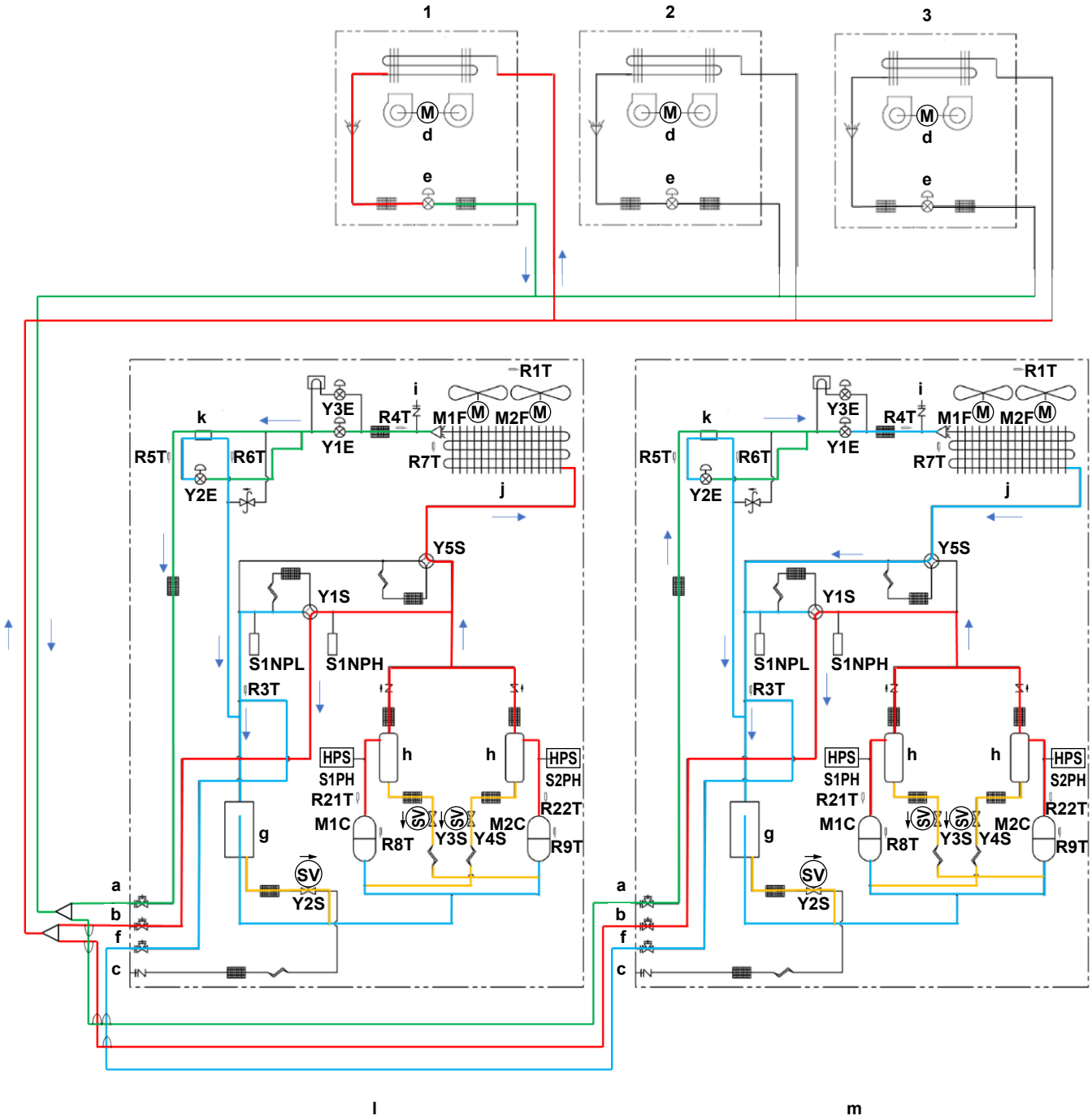

Indoor unit 1: Operation ON, Thermo ON, Fan ON, Expansion valve: normal control
Indoor unit 2: Operation OFF, Fan OFF, Expansion valve: closed (0 pulse)
Indoor unit 3: Operation ON, Thermo OFF, Fan ON, Expansion valve: closed (0 pulse)

Legend

	High pressure, high temperature gas	-M2F	Fan motor 2
	High pressure, high temperature liquid	R1T	Thermistor (air)
	Low pressure, low temperature gas	R21T	Thermistor (M1Cdischarge)
	Oil return line	R22T	Thermistor (M2C discharge)
1	Indoor unit 1	R3T	Thermistor (accumulator)
2	Indoor unit 2	R4T	Thermistor (heat exchanger, liquid pipe)
3	Indoor unit 3	R5T	Thermistor (subcool, liquid pipe)
a	Field piping (liquid)	R6T	Thermistor (heat exchanger, gas pipe)
b	Field piping (gas)	R7T	Thermistor (heat exchanger, Deicer)
c	Refrigerant charge port	R8T	Thermistor (M1C body)
d	Fan	R9T	Thermistor (M2C body)
e	Expansion valve	S1NPH	High pressure sensor
f	Equalizing pipe	S1NPL	Low pressure sensor
g	Accumulator	S1PH	High pressure switch (M1Cdischarge)
h	Oil separator	S2PH	High pressure switch (M2C discharge)
i	Service port	Y1E	Electronic expansion valve (main)
j	Heat exchanger	Y2E	Electronic expansion valve (sub-cool)
k	Subcool heat exchanger	Y3E	Electronic expansion valve (liquid cooling)
l	Defrosting unit	Y4E	Electronic Expansion Valve (PCM vessel)
m	Unit in heating mode	Y1S	4-way valve
HPS	High pressure switch	Y2S	Solenoid valve (accumulator oil return)
M1C	Compressor 1	Y3S	Solenoid valve (oil separator 1 oil return)
M2C	Compressor 2	Y4S	Solenoid valve (oil separator 2 oil return)
M1F	Fan motor 1	Y5S	4-way valve (sub)

6.4 Component overview

6.4.1 Component overview: RXYQ8~12U + RXYTQ8U units

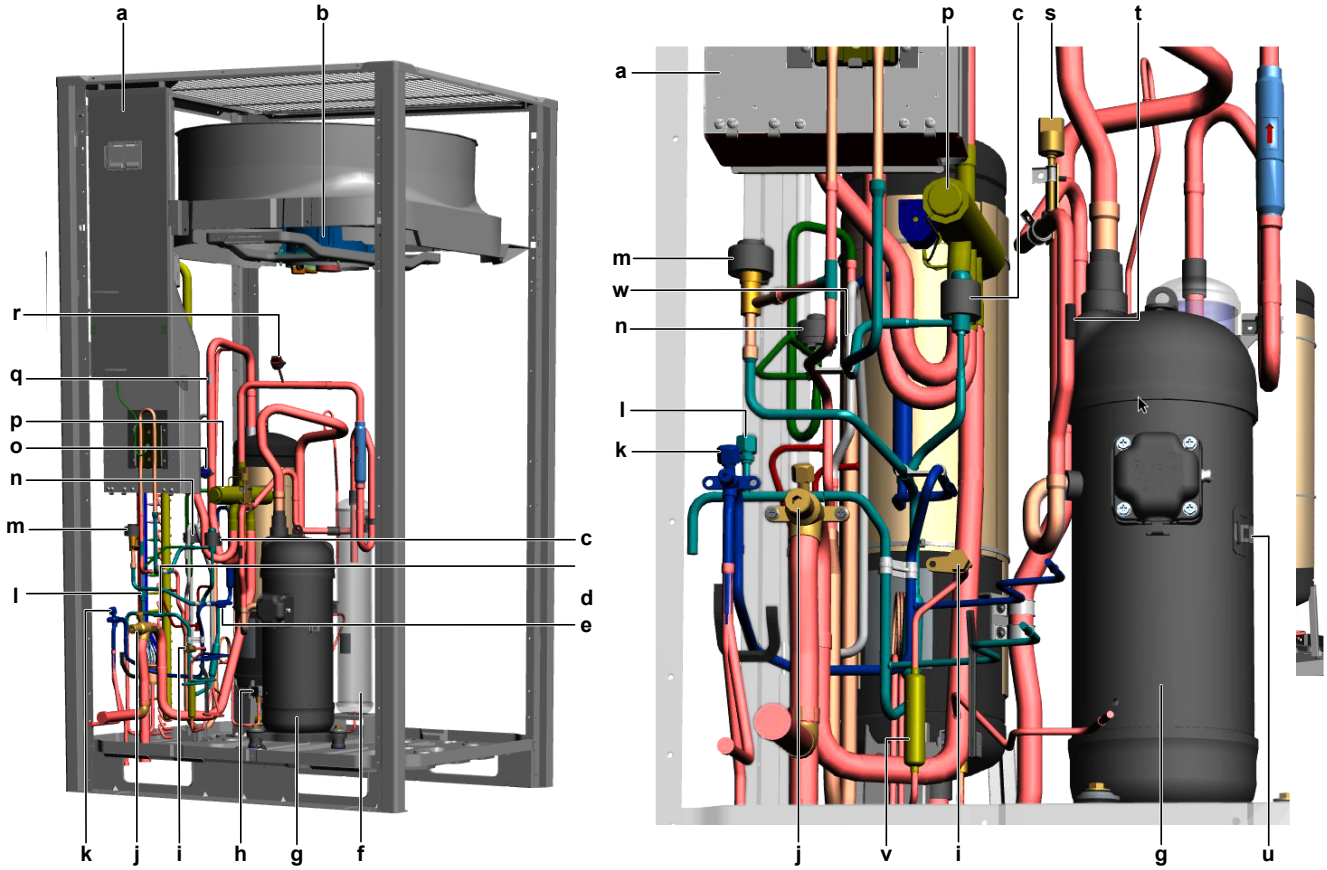

- **a** Switchbox, for details see "6.5 Switchbox overview" [▶ 373].
- **b** Fan motor
- **c** Liquid cooling expansion valve Y3E
- **d** Liquid pipe thermistor, outdoor heat exchanger R4T
- **e** Liquid pipe thermistor, sub-cool heat exchanger R5T
- **f** Oil separator
- **g** Compressor M1C
- **h** Oil return valve Y2S
- **i** Charge port
- **j** Gas stop valve
- **k** Liquid stop valve
- **l** Service port
- **m** Main expansion valve Y1E
- **n** Sub-cool expansion Valve Y2E
- **o** Low pressure sensor S1NPL
- **p** 4-way valve Y1S
- **q** Accumulator inlet thermistor R3T
- **r** Refrigerant high pressure sensor S1NPH
- **s** High pressure switch S1PH
- **t** Compressor (M1C) discharge thermistor R21T
- **u** Compressor (M1C) body thermistor R8T
- **v** Filter
- **w** Gas pipe thermistor, sub-cool heat exchanger R6T
- **x** Liquid receiver
- **y** Heat exchanger
- **z** De-icer thermistor, outdoor heat exchanger R7T
- **aa** Filter
- **ab** Oil return valve Y3S
- **ac** Filter

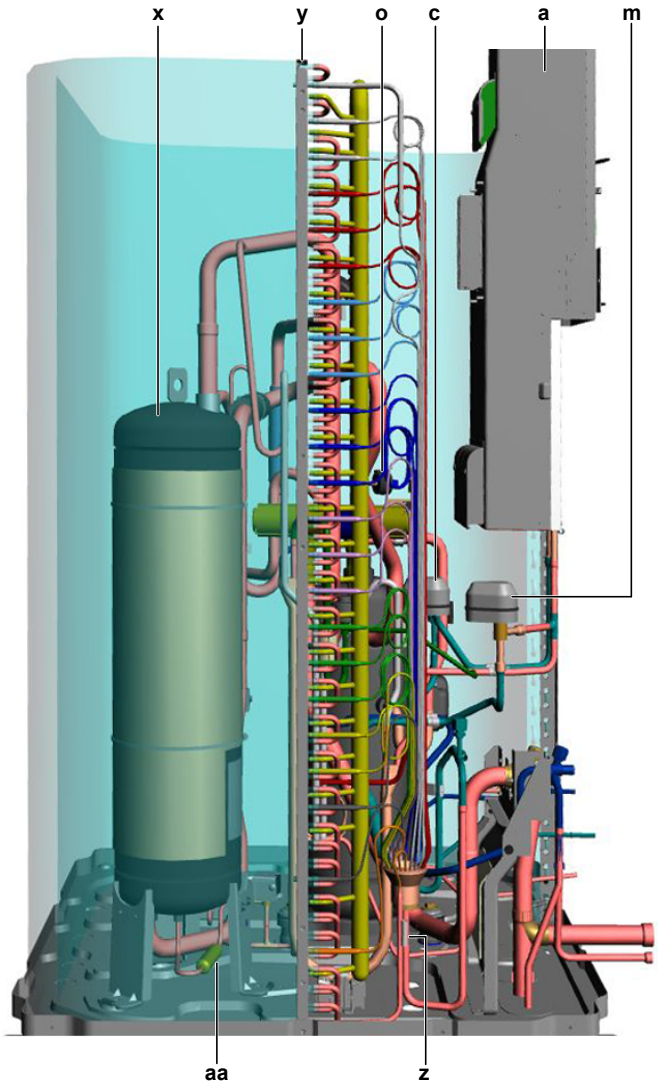

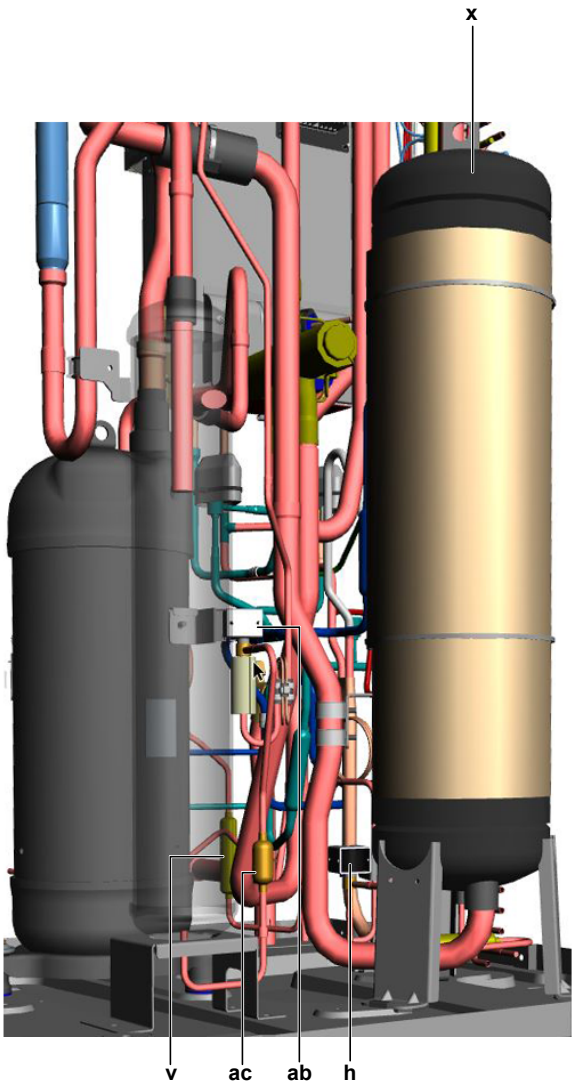

- **a** Switchbox, for details see "6.5 Switchbox overview" [▶ 373].
- **b** Fan motor
- **c** Liquid cooling expansion valve Y3E
- **d** Liquid pipe thermistor, outdoor heat exchanger R4T
- **e** Liquid pipe thermistor, sub-cool heat exchanger R5T
- **f** Oil separator
- **g** Compressor M1C
- **h** Oil return valve Y2S
- **i** Charge port
- **j** Gas stop valve
- **k** Liquid stop valve
- **l** Service port
- **m** Main expansion valve Y1E
- **n** Sub-cool expansion Valve Y2E
- **o** Low pressure sensor S1NPL
- **p** 4-way valve Y1S
- **q** Accumulator inlet thermistor R3T
- **r** Refrigerant high pressure sensor S1NPH
- **s** High pressure switch S1PH
- **t** Compressor (M1C) discharge thermistor R21T
- **u** Compressor (M1C) body thermistor R8T
- **v** Filter
- **w** Gas pipe thermistor, sub-cool heat exchanger R6T
- **x** Liquid receiver
- **y** Heat exchanger
- **z** De-icer thermistor, outdoor heat exchanger R7T
- **aa** Filter
- **ab** Oil return valve Y3S
- **ac** Filter

6.4.2 Component overview: RXYQ14~16U + RXYTQ10~16U units

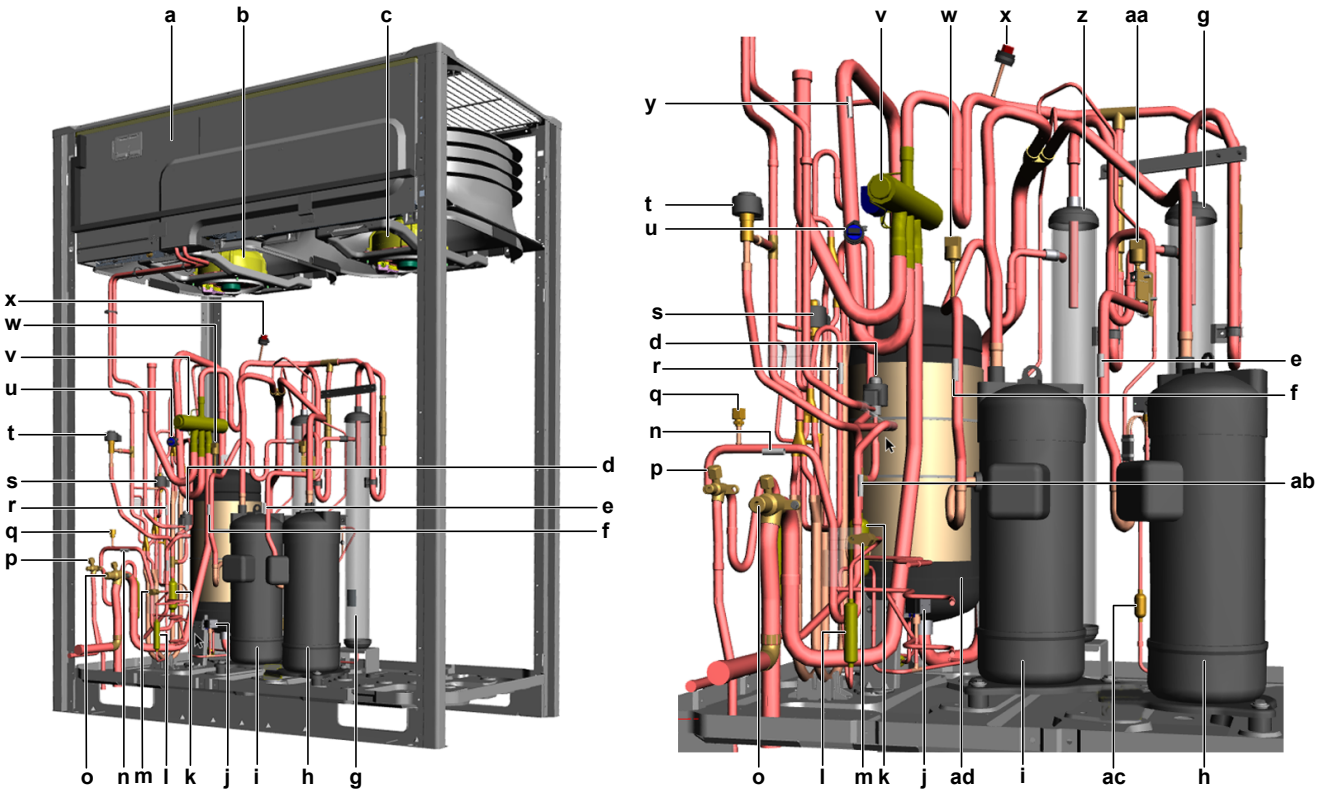

- **a** Switchbox, for details see "6.5 Switchbox overview" [▶ 373].
- **b** Fan motor M1F
- **c** Fan motor M2F
- **d** Liquid cooling expansion valve Y3E
- **e** Compressor (M1C) discharge thermistor R21T
- **f** Compressor (M2C) discharge thermistor R22T[(1)]
- **g** Oil separator
- **h** Compressor M1C + body thermistor R8T
- **i** Compressor M2C + body thermistor R9T[(1)]
- **j** Oil return valve Y2S
- **k** Filter
- **l** Filter
- **m** Charge port
- **n** Liquid pipe thermistor, outdoor heat exchanger R4T
- **o** Gas stop valve
- **p** Liquid stop valve
- **q** Service port
- **r** Gas pipe thermistor, sub-cool heat exchanger R6T
- **s** Sub-cool expansion Valve Y2E
- **t** Main expansion valve Y1E
- **u** Low pressure sensor S1NPL
- **v** 4-way valve Y1S
- **w** High pressure switch S2PH
- **x** Refrigerant high pressure sensor S1NPH
- **y** Accumulator inlet thermistor R3T
- **z** Oil separator
- **aa** High pressure switch S1PH
- **ab** Liquid pipe thermistor, sub-cool heat exchanger R5T
- **ac** Filter
- **ad** Accumulator
- **ae** Heat exchanger
- **af** De-icer thermistor, outdoor heat exchanger R7T
- **ag** Filter
- **ah** Oil return valve Y3S
- **ai** Filter
- **aj** Oil return valve Y4S[(1)]

(1) NOT equipped in RXYTQ10+12 units.

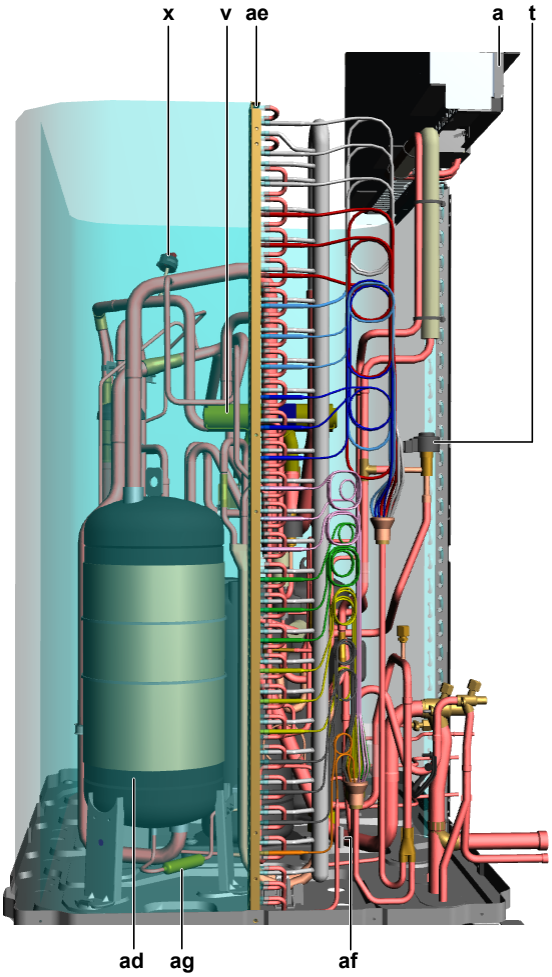

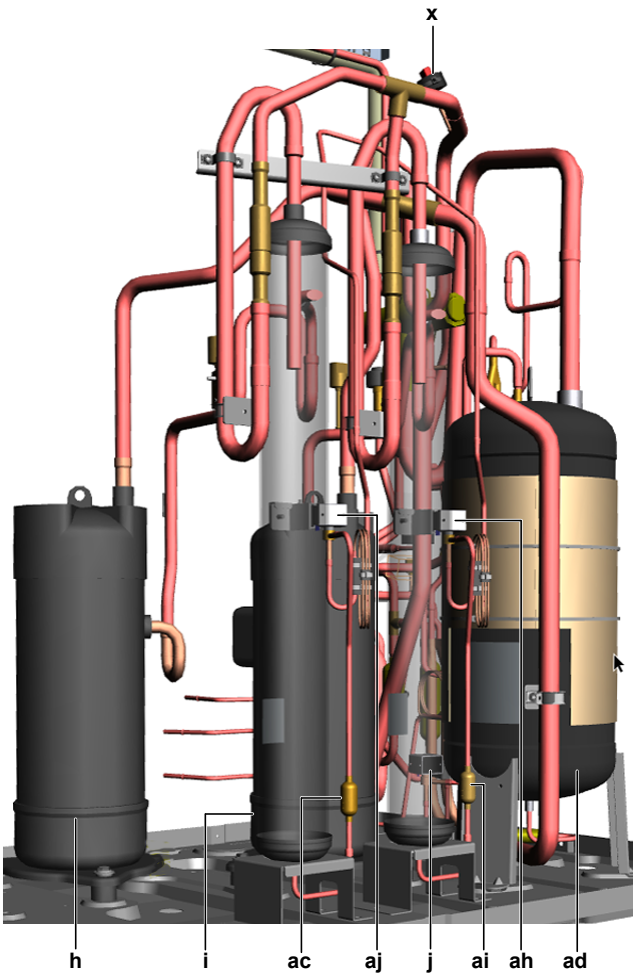

a Switchbox, for details see "6.5 Switchbox overview" [▶ 373].
b Fan motor M1F
c Fan motor M2F
d Liquid cooling expansion valve Y3E
e Compressor (M1C) discharge thermistor R21T
f Compressor (M2C) discharge thermistor R22T[(1)]
g Oil separator
h Compressor M1C + body thermistor R8T
i Compressor M2C + body thermistor R9T[(1)]
j Oil return valve Y2S
k Filter
l Filter
m Charge port
n Liquid pipe thermistor, outdoor heat exchanger R4T
o Gas stop valve
p Liquid stop valve
q Service port
r Gas pipe thermistor, sub-cool heat exchanger R6T
s Sub-cool expansion Valve Y2E
t Main expansion valve Y1E
u Low pressure sensor S1NPL
v 4-way valve Y1S
w High pressure switch S2PH
x Refrigerant high pressure sensor S1NPH
y Accumulator inlet thermistor R3T
z Oil separator
aa High pressure switch S1PH
ab Liquid pipe thermistor, sub-cool heat exchanger R5T
ac Filter
ad Accumulator
ae Heat exchanger
af De-icer thermistor, outdoor heat exchanger R7T
ag Filter
ah Oil return valve Y3S
ai Filter
aj Oil return valve Y4S[(1)]

(1) NOT equipped in RXYTQ10+12 units.

6.4.3 Component overview: RXYQ18~20U units

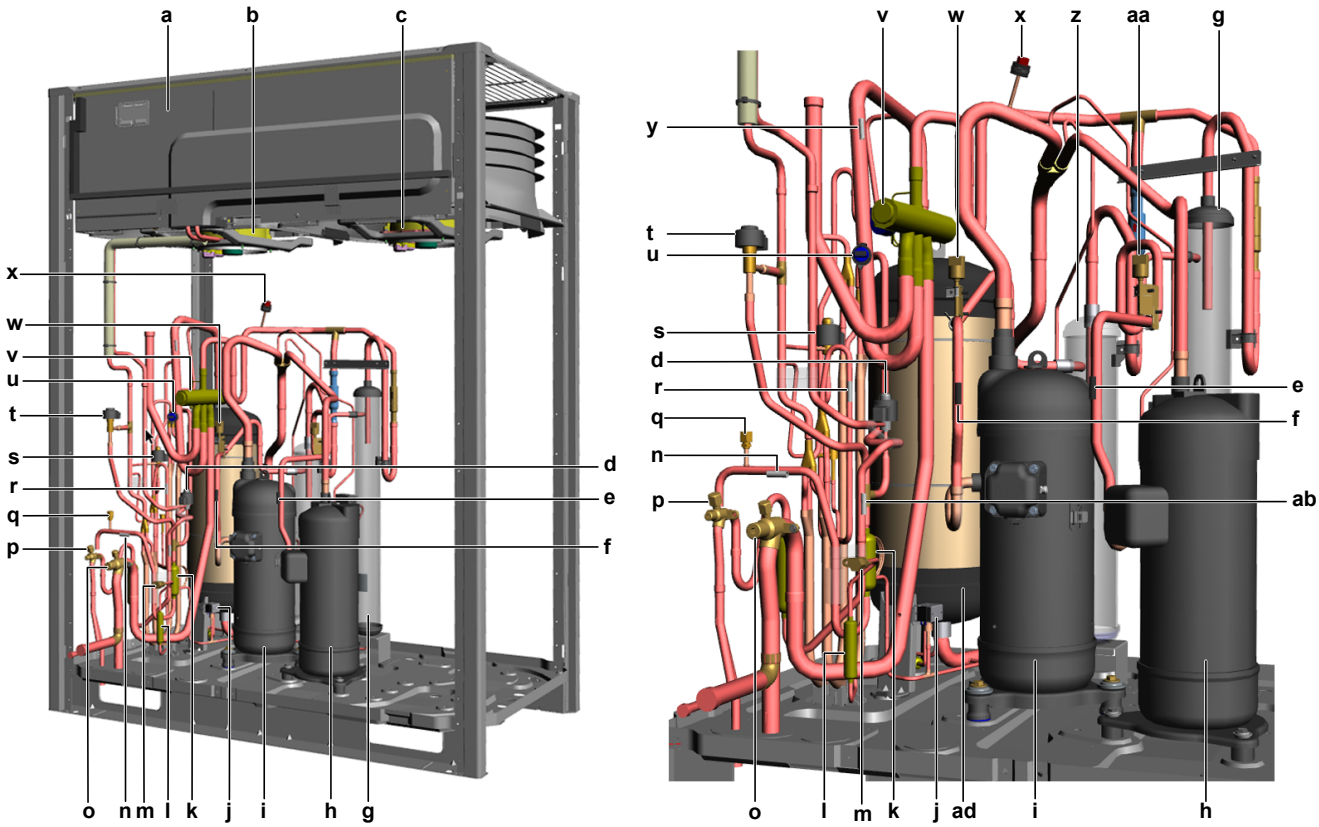

- **a** Switchbox, for details see "6.5 Switchbox overview" [▶ 373].
- **b** Fan motor M1F
- **c** Fan motor M2F
- **d** Liquid cooling expansion valve Y3E
- **e** Compressor (M1C) discharge thermistor R21T
- **f** Compressor (M2C) discharge thermistor R22T
- **g** Oil separator
- **h** Compressor M1C + body thermistor R8T
- **i** Compressor M2C + body thermistor R9T
- **j** Oil return valve Y2S
- **k** Filter
- **l** Filter
- **m** Charge port
- **n** Liquid pipe thermistor, outdoor heat exchanger R4T
- **o** Gas stop valve
- **p** Liquid stop valve
- **q** Service port
- **r** Gas pipe thermistor, sub-cool heat exchanger R6T
- **s** Sub-cool expansion Valve Y2E
- **t** Main expansion valve Y1E
- **u** Low pressure sensor S1NPL
- **v** 4-way valve Y1S
- **w** High pressure switch S2PH
- **x** Refrigerant high pressure sensor S1NPH
- **y** Accumulator inlet thermistor R3T
- **z** Oil separator
- **aa** High pressure switch S1PH
- **ab** Liquid pipe thermistor, sub-cool heat exchanger R5T
- **ac** Filter
- **ad** Accumulator
- **ae** Heat exchanger
- **af** De-icer thermistor, outdoor heat exchanger R7T
- **ag** Filter
- **ah** Oil return valve Y3S
- **ai** Filter
- **aj** Oil return valve Y4S

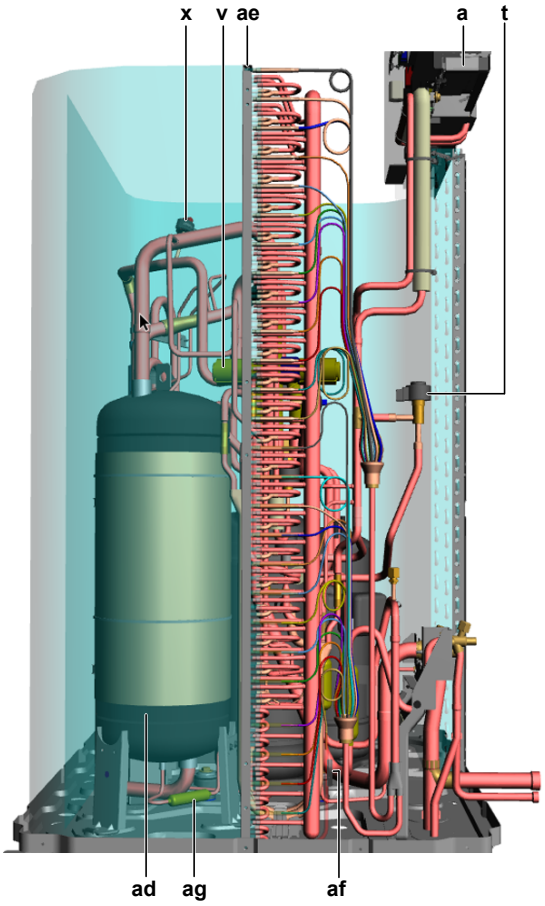

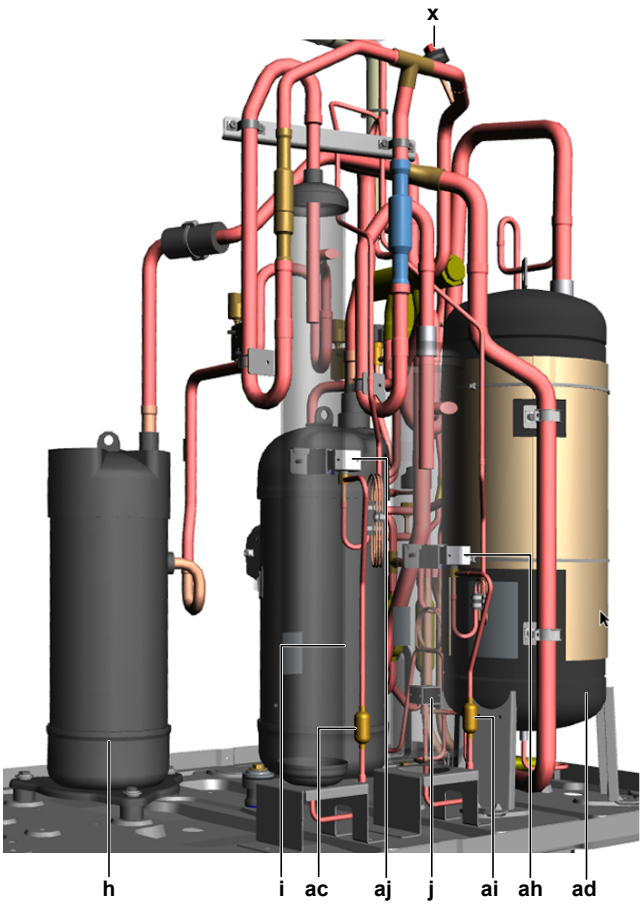

- **a** Switchbox, for details see "6.5 Switchbox overview" [▶ 373].
- **b** Fan motor M1F
- **c** Fan motor M2F
- **d** Liquid cooling expansion valve Y3E
- **e** Compressor (M1C) discharge thermistor R21T
- **f** Compressor (M2C) discharge thermistor R22T
- **g** Oil separator
- **h** Compressor M1C + body thermistor R8T
- **i** Compressor M2C + body thermistor R9T
- **j** Oil return valve Y2S
- **k** Filter
- **l** Filter
- **m** Charge port
- **n** Liquid pipe thermistor, outdoor heat exchanger R4T
- **o** Gas stop valve
- **p** Liquid stop valve
- **q** Service port
- **r** Gas pipe thermistor, sub-cool heat exchanger R6T
- **s** Sub-cool expansion Valve Y2E
- **t** Main expansion valve Y1E
- **u** Low pressure sensor S1NPL
- **v** 4-way valve Y1S
- **w** High pressure switch S2PH
- **x** Refrigerant high pressure sensor S1NPH
- **y** Accumulator inlet thermistor R3T
- **z** Oil separator
- **aa** High pressure switch S1PH
- **ab** Liquid pipe thermistor, sub-cool heat exchanger R5T
- **ac** Filter
- **ad** Accumulator
- **ae** Heat exchanger
- **af** De-icer thermistor, outdoor heat exchanger R7T
- **ag** Filter
- **ah** Oil return valve Y3S
- **ai** Filter
- **aj** Oil return valve Y4S

6.4.4 Component overview: RYMQ8~12U units

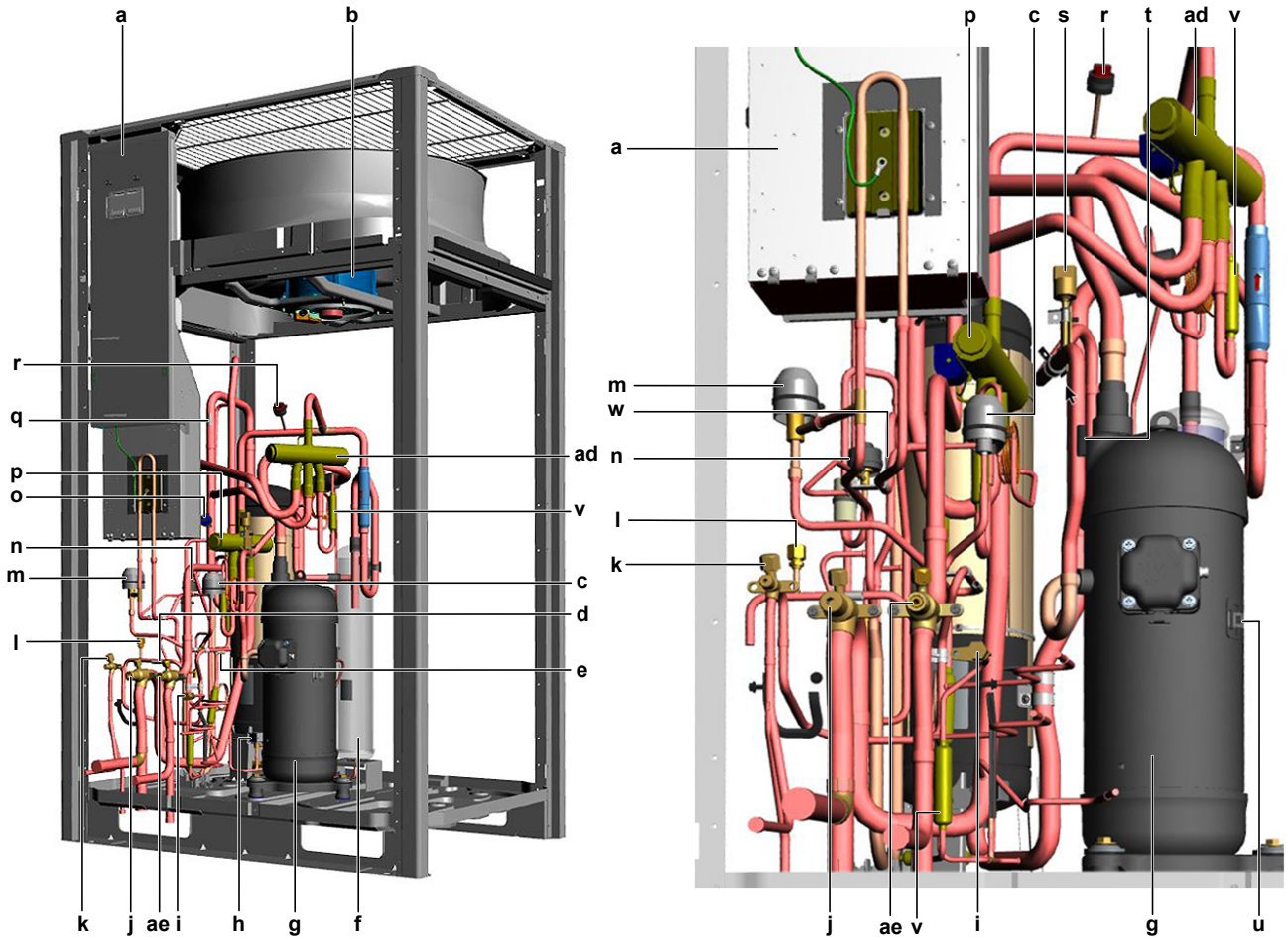

- **a** Switchbox, for details see "6.5 Switchbox overview" [▶ 373].
- **b** Fan motor
- **c** Liquid cooling expansion valve Y3E
- **d** Liquid pipe thermistor, outdoor heat exchanger R4T
- **e** Liquid pipe thermistor, sub-cool heat exchanger R5T
- **f** Oil separator
- **g** Compressor M1C
- **h** Oil return valve Y2S
- **i** Charge port
- **j** Gas stop valve
- **k** Liquid stop valve
- **l** Service port
- **m** Main expansion valve Y1E
- **n** Sub-cool expansion Valve Y2E
- **o** Low pressure sensor S1NPL
- **p** 4-way valve Y1S
- **q** Accumulator inlet thermistor R3T
- **r** Refrigerant high pressure sensor S1NPH
- **s** High pressure switch S1PH
- **t** Compressor (M1C) discharge thermistor R21T
- **u** Compressor (M1C) body thermistor R8T
- **v** Filter
- **w** Gas pipe thermistor, sub-cool heat exchanger R6T
- **x** Liquid receiver
- **y** Heat exchanger
- **z** De-icer thermistor, outdoor heat exchanger R7T
- **aa** Filter
- **ab** Oil return valve Y3S
- **ac** Filter
- **ad** 4-way valve Y5S
- **ae** Equalising pipe

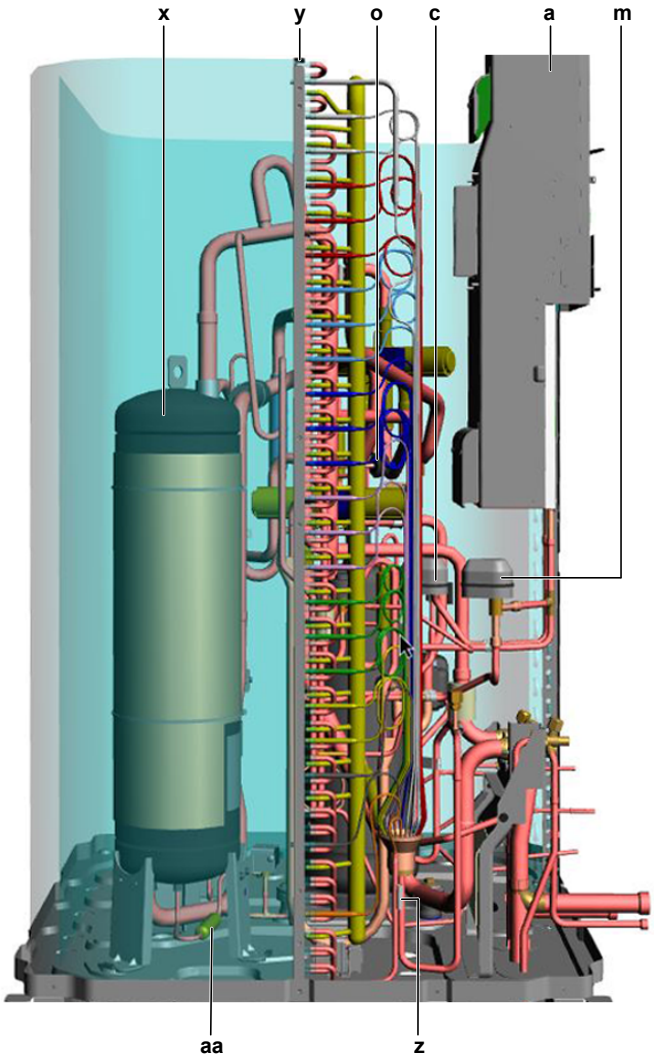

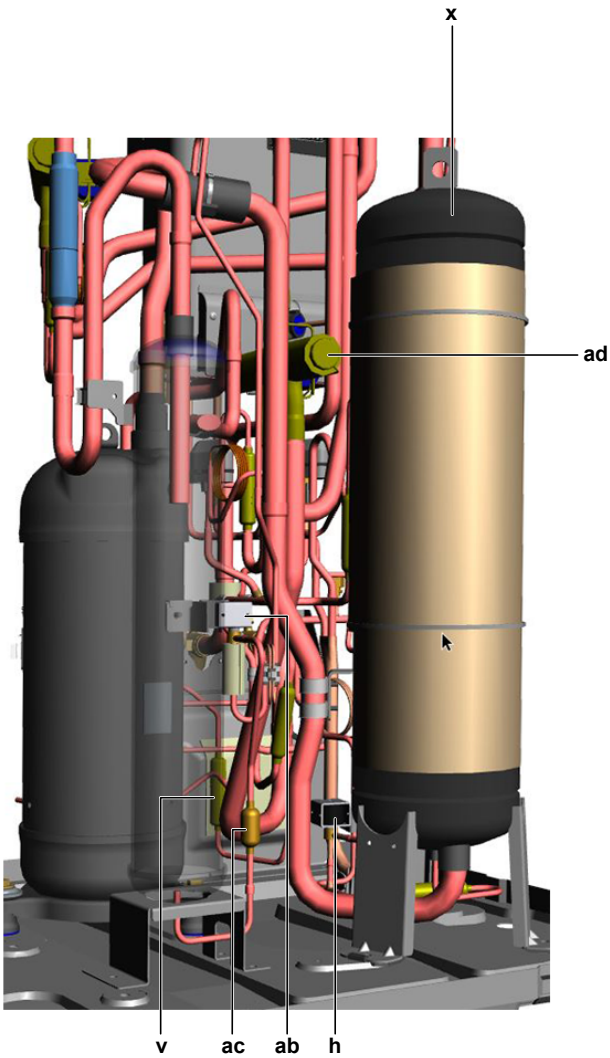

a Switchbox, for details see "6.5 Switchbox overview" [▸ 373].
b Fan motor
c Liquid cooling expansion valve Y3E
d Liquid pipe thermistor, outdoor heat exchanger R4T
e Liquid pipe thermistor, sub-cool heat exchanger R5T
f Oil separator
g Compressor M1C
h Oil return valve Y2S
i Charge port
j Gas stop valve
k Liquid stop valve
l Service port
m Main expansion valve Y1E
n Sub-cool expansion Valve Y2E
o Low pressure sensor S1NPL
p 4-way valve Y1S
q Accumulator inlet thermistor R3T
r Refrigerant high pressure sensor S1NPH
s High pressure switch S1PH
t Compressor (M1C) discharge thermistor R21T
u Compressor (M1C) body thermistor R8T
v Filter
w Gas pipe thermistor, sub-cool heat exchanger R6T
x Liquid receiver
y Heat exchanger
z De-icer thermistor, outdoor heat exchanger R7T
aa Filter
ab Oil return valve Y3S
ac Filter
ad 4-way valve Y5S
ae Equalising pipe

6.4.5 Component overview: RYMQ14~16U units

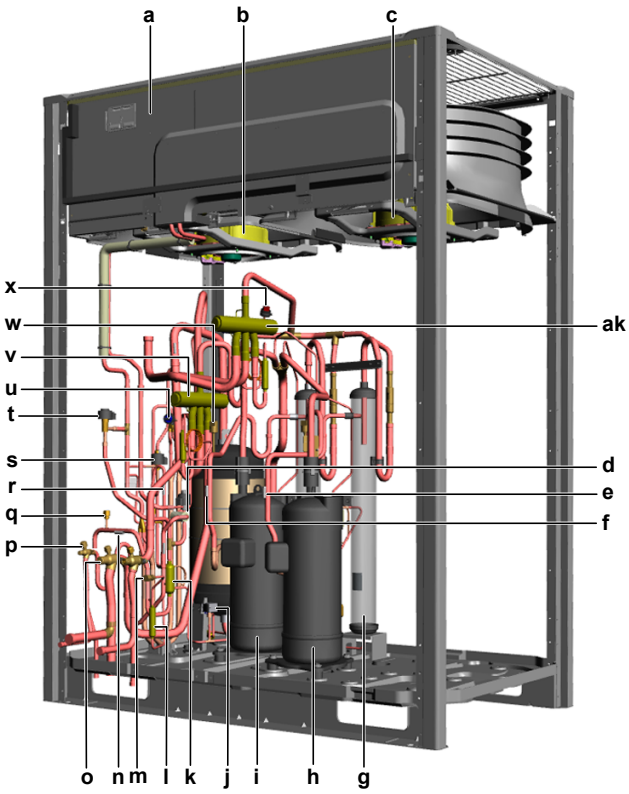

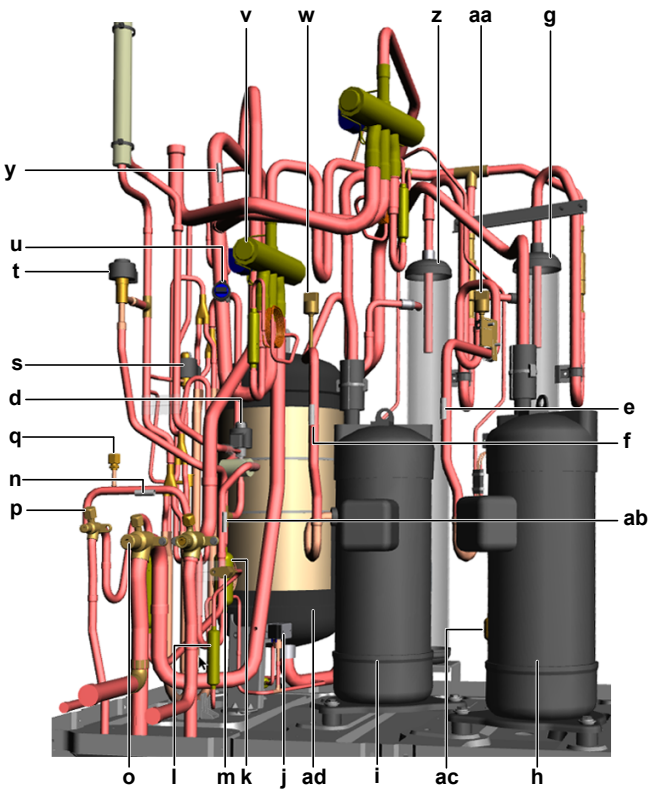

- **a** Switchbox, for details see "6.5 Switchbox overview" [▶ 373].
- **b** Fan motor M1F
- **c** Fan motor M2F
- **d** Liquid cooling expansion valve Y3E
- **e** Compressor (M1C) discharge thermistor R21T
- **f** Compressor (M2C) discharge thermistor R22T
- **g** Oil separator
- **h** Compressor M1C + body thermistor R8T
- **i** Compressor M2C + body thermistor R9T
- **j** Oil return valve Y2S
- **k** Filter
- **l** Filter
- **m** Charge port
- **n** Liquid pipe thermistor, outdoor heat exchanger R4T
- **o** Gas stop valve
- **p** Liquid stop valve
- **q** Service port
- **r** Gas pipe thermistor, sub-cool heat exchanger R6T
- **s** Sub-cool expansion Valve Y2E
- **t** Main expansion valve Y1E
- **u** Low pressure sensor S1NPL
- **v** 4-way valve Y1S
- **w** High pressure switch S2PH
- **x** Refrigerant high pressure sensor S1NPH
- **y** Accumulator inlet thermistor R3T
- **z** Oil separator
- **aa** High pressure switch S1PH
- **ab** Liquid pipe thermistor, sub-cool heat exchanger R5T
- **ac** Filter
- **ad** Accumulator
- **ae** Heat exchanger
- **af** De-icer thermistor, outdoor heat exchanger R7T
- **ag** Filter
- **ah** Oil return valve Y3S
- **ai** Filter
- **aj** Oil return valve Y4S
- **ak** 4-way valve Y5S

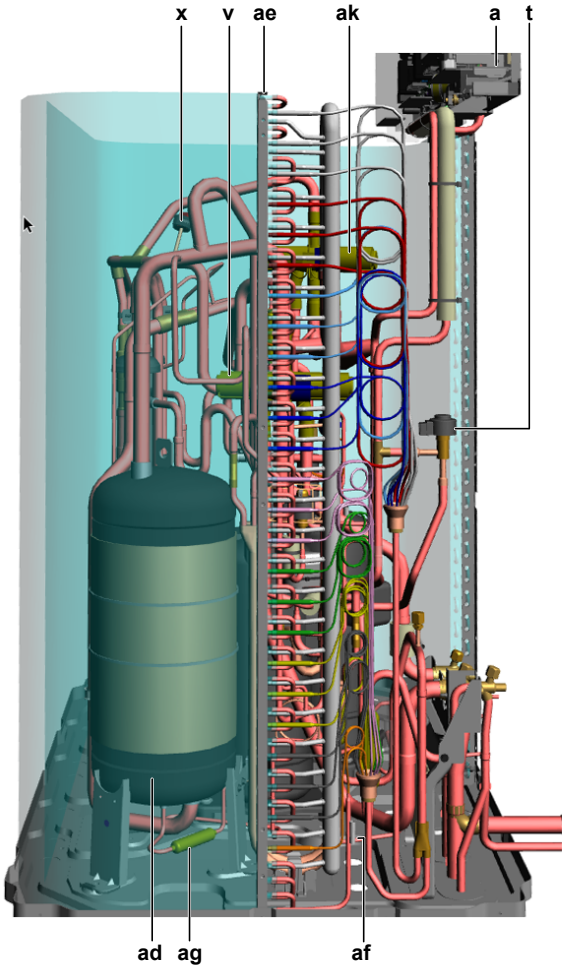

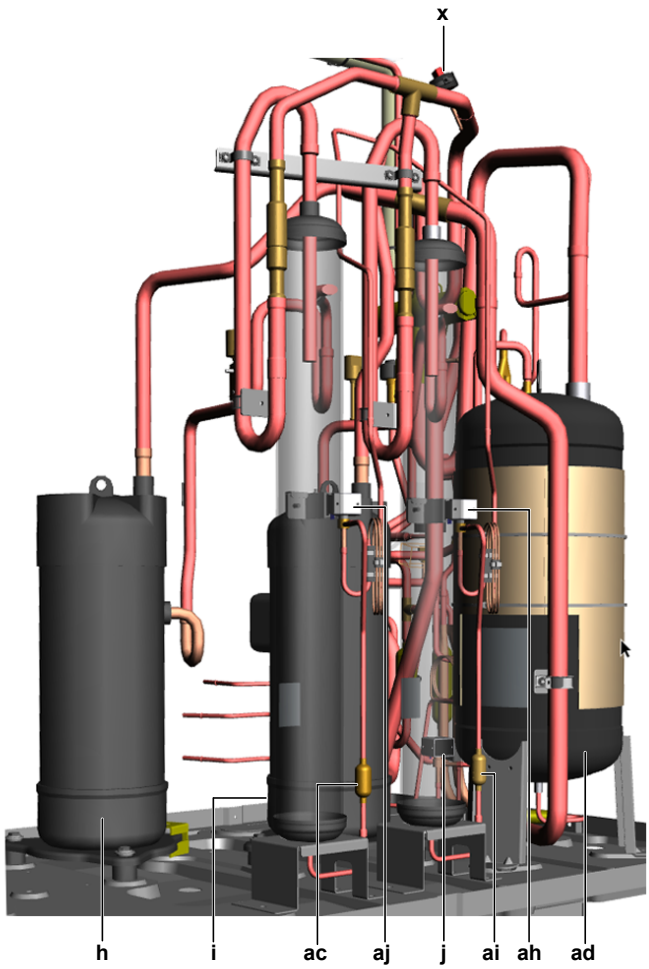

- **a** Switchbox, for details see "6.5 Switchbox overview" [▶ 373].
- **b** Fan motor M1F
- **c** Fan motor M2F
- **d** Liquid cooling expansion valve Y3E
- **e** Compressor (M1C) discharge thermistor R21T
- **f** Compressor (M2C) discharge thermistor R22T
- **g** Oil separator
- **h** Compressor M1C + body thermistor R8T
- **i** Compressor M2C + body thermistor R9T
- **j** Oil return valve Y2S
- **k** Filter
- **l** Filter
- **m** Charge port
- **n** Liquid pipe thermistor, outdoor heat exchanger R4T
- **o** Gas stop valve
- **p** Liquid stop valve
- **q** Service port
- **r** Gas pipe thermistor, sub-cool heat exchanger R6T
- **s** Sub-cool expansion Valve Y2E
- **t** Main expansion valve Y1E
- **u** Low pressure sensor S1NPL
- **v** 4-way valve Y1S
- **w** High pressure switch S2PH
- **x** Refrigerant high pressure sensor S1NPH
- **y** Accumulator inlet thermistor R3T
- **z** Oil separator
- **aa** High pressure switch S1PH
- **ab** Liquid pipe thermistor, sub-cool heat exchanger R5T
- **ac** Filter
- **ad** Accumulator
- **ae** Heat exchanger
- **af** De-icer thermistor, outdoor heat exchanger R7T
- **ag** Filter
- **ah** Oil return valve Y3S
- **ai** Filter
- **aj** Oil return valve Y4S
- **ak** 4-way valve Y5S

6.4.6 Component overview: RYMQ18~20U units

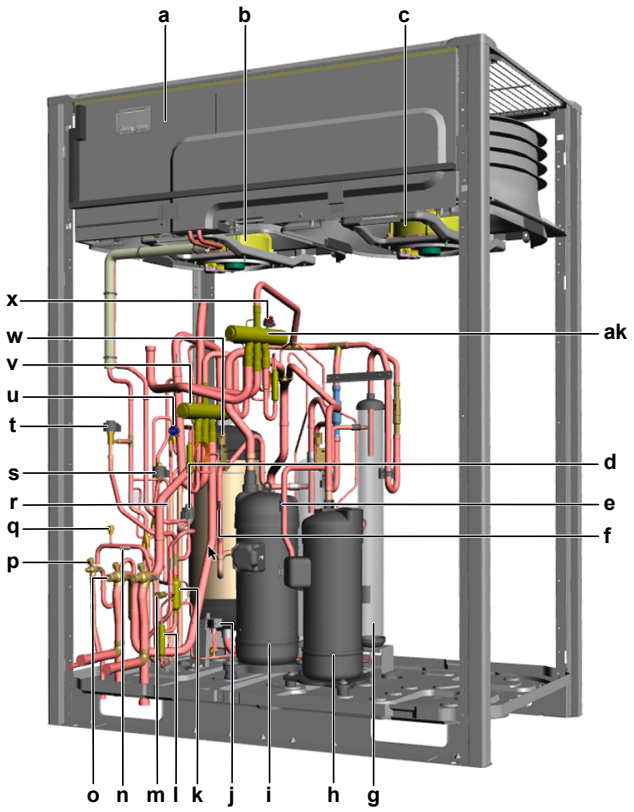

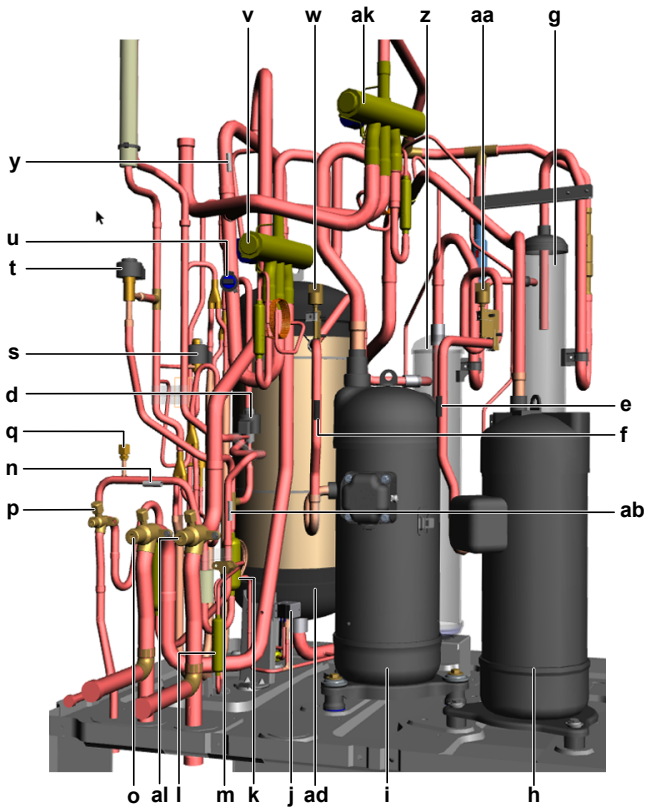

- **a** Switchbox, for details see "6.5 Switchbox overview" [▶ 373].
- **b** Fan motor M1F
- **c** Fan motor M2F
- **d** Liquid cooling expansion valve Y3E
- **e** Compressor (M1C) discharge thermistor R21T)
- **f** Compressor (M2C) discharge thermistor R22T)
- **g** Oil separator
- **h** Compressor M1C + body thermistor R8T
- **i** Compressor M2C + body thermistor R9T
- **j** Oil return valve Y2S
- **k** Filter
- **l** Filter
- **m** Charge port
- **n** Liquid pipe thermistor, outdoor heat exchanger R4T
- **o** Gas stop valve
- **p** Liquid stop valve
- **q** Service port
- **r** Gas pipe thermistor, sub-cool heat exchanger R6T
- **s** Sub-cool expansion Valve Y2E
- **t** Main expansion valve Y1E
- **u** Low pressure sensor S1NPL
- **v** 4-way valve Y1S
- **w** High pressure switch S2PH
- **x** Refrigerant high pressure sensor S1NPH
- **y** Accumulator inlet thermistor R3T
- **z** Oil separator
- **aa** High pressure switch S1PH
- **ab** Liquid pipe thermistor, sub-cool heat exchanger R5T
- **ac** Filter
- **ad** Accumulator
- **ae** Heat exchanger
- **af** De-icer thermistor, outdoor heat exchanger R7T
- **ag** Filter
- **ah** Oil return valve Y3S
- **ai** Filter
- **aj** Oil return valve Y4S
- **ak** 4-way valve Y5S
- **al** Equalisation pipe

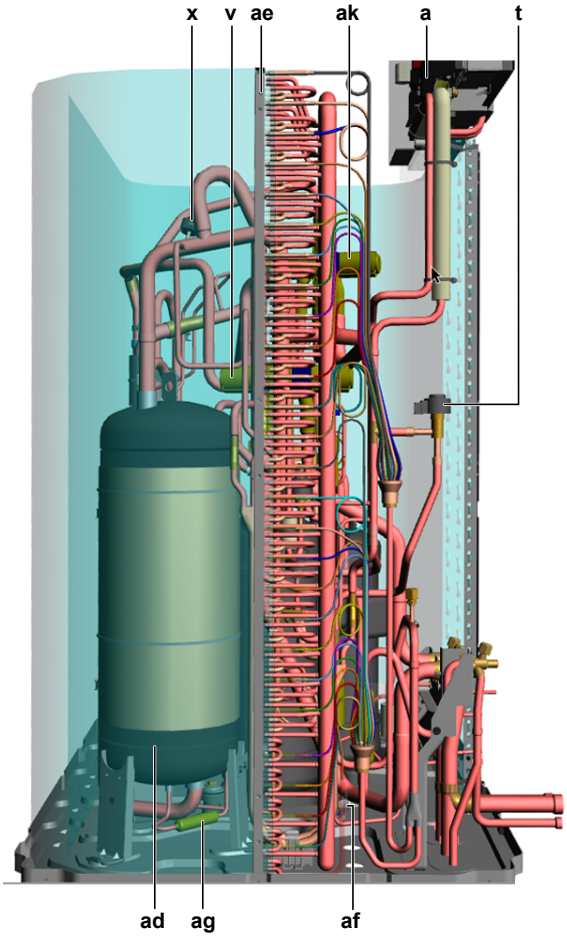

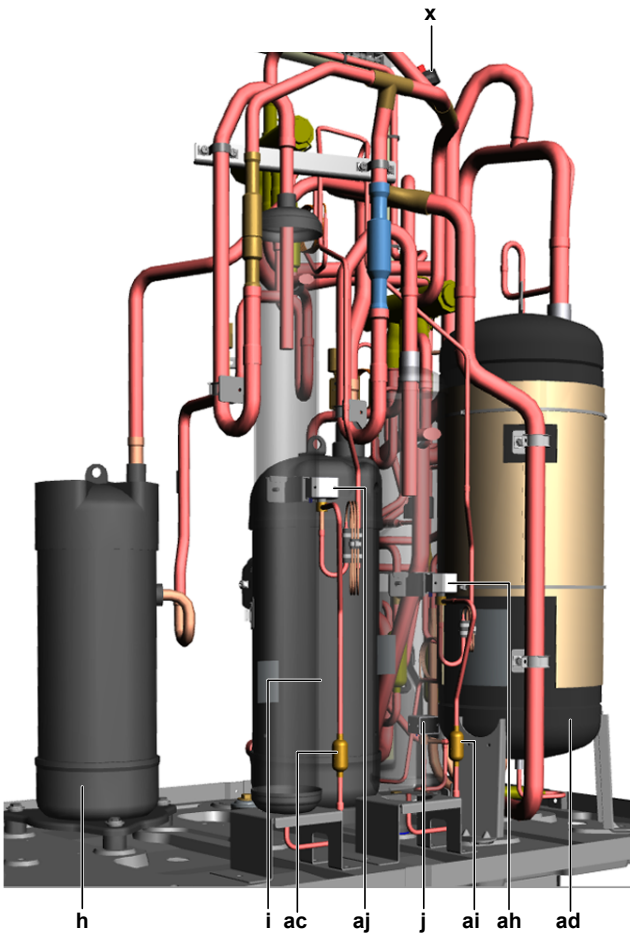

- **a** Switchbox, for details see "6.5 Switchbox overview" [▸ 373].
- **b** Fan motor M1F
- **c** Fan motor M2F
- **d** Liquid cooling expansion valve Y3E
- **e** Compressor (M1C) discharge thermistor R21T)
- **f** Compressor (M2C) discharge thermistor R22T)
- **g** Oil separator
- **h** Compressor M1C + body thermistor R8T
- **i** Compressor M2C + body thermistor R9T
- **j** Oil return valve Y2S
- **k** Filter
- **l** Filter
- **m** Charge port
- **n** Liquid pipe thermistor, outdoor heat exchanger R4T
- **o** Gas stop valve
- **p** Liquid stop valve
- **q** Service port
- **r** Gas pipe thermistor, sub-cool heat exchanger R6T
- **s** Sub-cool expansion Valve Y2E
- **t** Main expansion valve Y1E
- **u** Low pressure sensor S1NPL
- **v** 4-way valve Y1S
- **w** High pressure switch S2PH
- **x** Refrigerant high pressure sensor S1NPH
- **y** Accumulator inlet thermistor R3T
- **z** Oil separator
- **aa** High pressure switch S1PH
- **ab** Liquid pipe thermistor, sub-cool heat exchanger R5T
- **ac** Filter
- **ad** Accumulator
- **ae** Heat exchanger
- **af** De-icer thermistor, outdoor heat exchanger R7T
- **ag** Filter
- **ah** Oil return valve Y3S
- **ai** Filter
- **aj** Oil return valve Y4S
- **ak** 4-way valve Y5S
- **al** Equalisation pipe

6.4.7 Component overview: RYYQ8~12U units

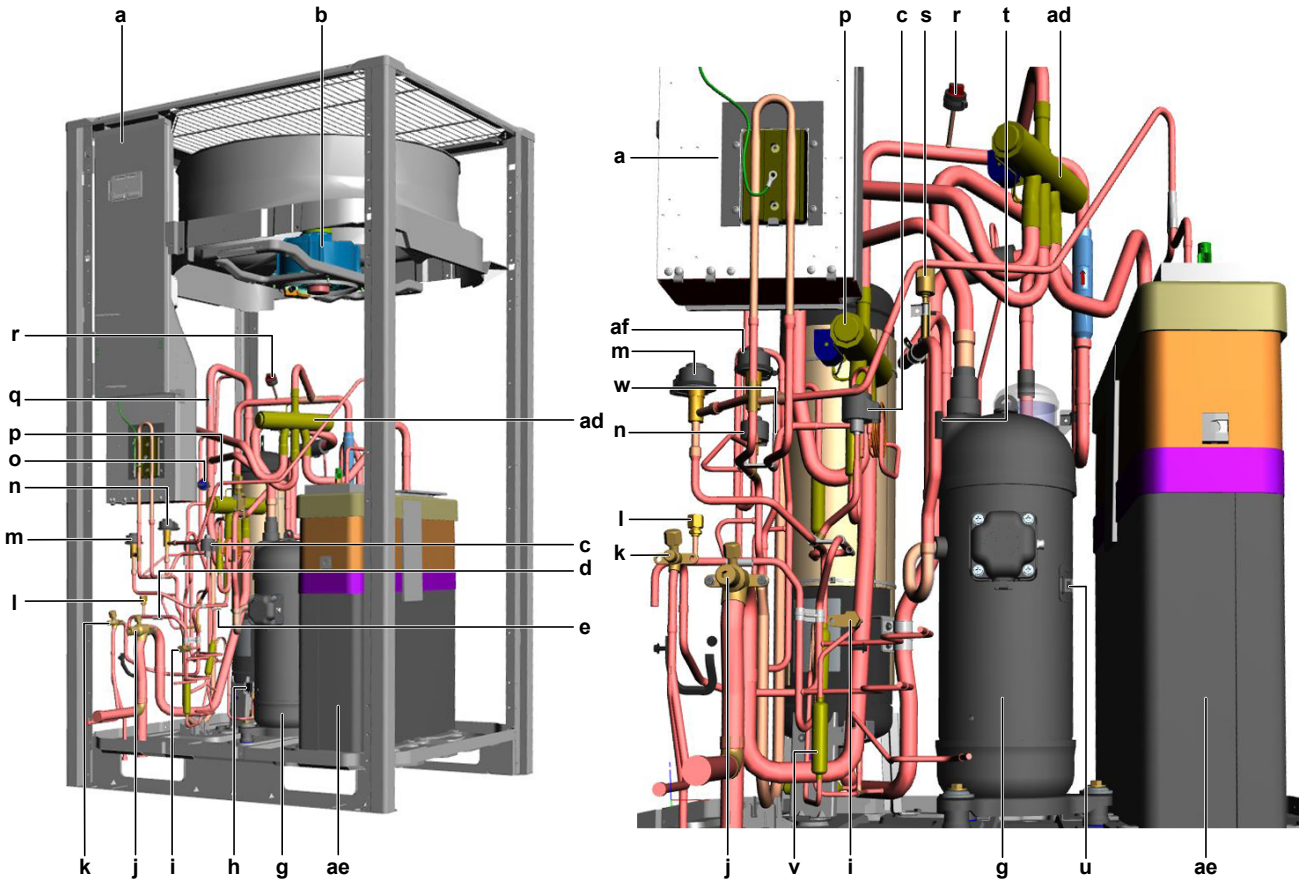

- **a** Switchbox, for details see "6.5 Switchbox overview" [▶ 373].
- **b** Fan motor
- **c** Liquid cooling expansion valve Y3E
- **d** Liquid pipe thermistor, outdoor heat exchanger R4T
- **e** Liquid pipe thermistor, sub-cool heat exchanger R5T
- **f** Oil separator
- **g** Compressor M1C
- **h** Oil return valve Y2S
- **i** Charge port
- **j** Gas stop valve
- **k** Liquid stop valve
- **l** Service port
- **m** Main expansion valve Y1E
- **n** Sub-cool expansion Valve Y2E
- **o** Low pressure sensor S1NPL
- **p** 4-way valve Y1S
- **q** Accumulator inlet thermistor R3T
- **r** Refrigerant high pressure sensor S1NPH
- **s** High pressure switch S1PH
- **t** Compressor (M1C) discharge thermistor R21T)
- **u** Compressor (M1C) body thermistor R8T)
- **v** Filter
- **w** Gas pipe thermistor, sub-cool heat exchanger R6T
- **x** Liquid receiver
- **y** Heat exchanger
- **z** De-icer thermistor, outdoor heat exchanger R7T
- **aa** Filter
- **ab** Oil return valve Y3S
- **ac** Filter
- **ad** 4-way valve Y5S
- **ae** Heat storage vessel
- **af** Storage vessel expansion valve Y4E

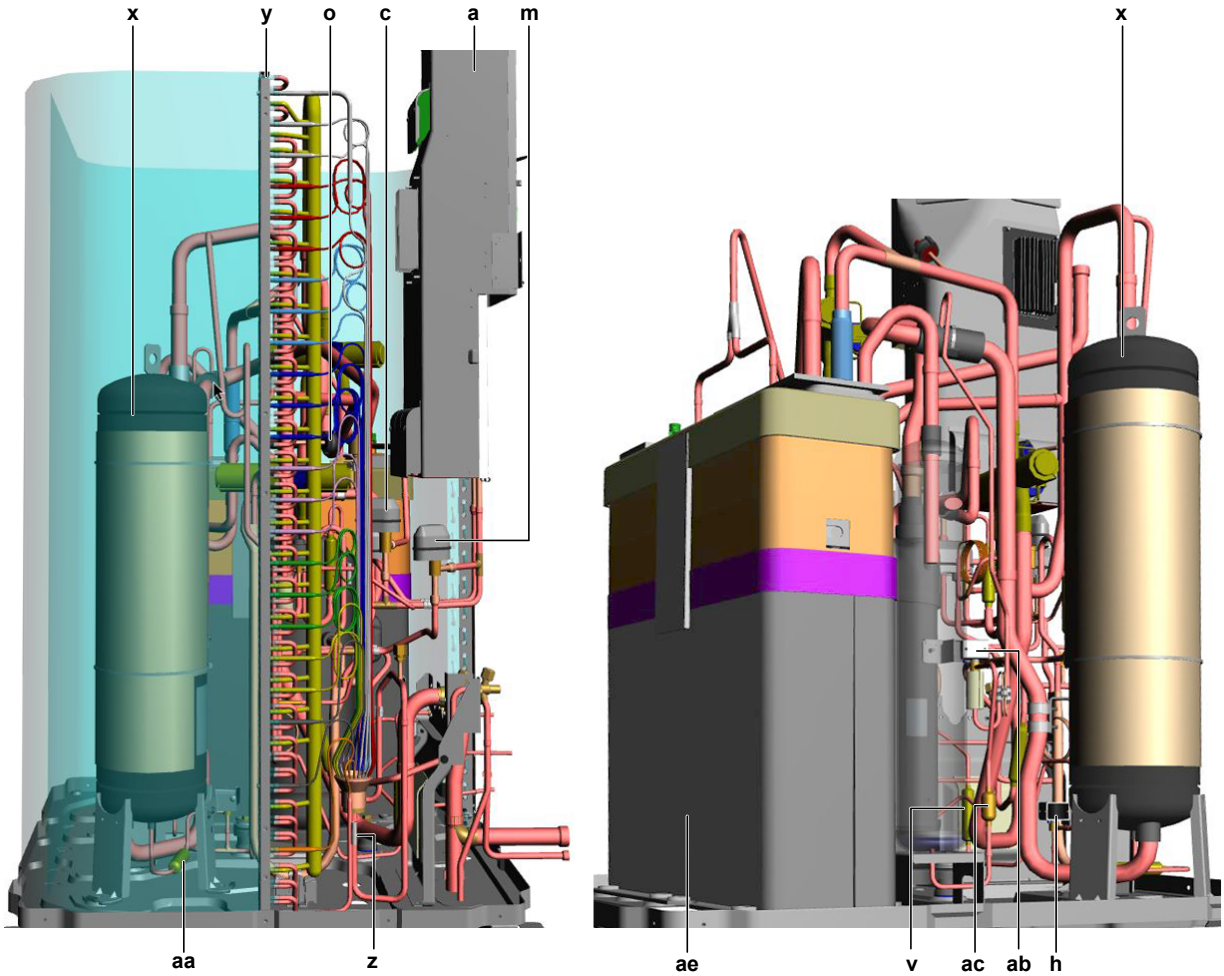

- **a** Switchbox, for details see "6.5 Switchbox overview" [▶ 373].
- **b** Fan motor
- **c** Liquid cooling expansion valve Y3E
- **d** Liquid pipe thermistor, outdoor heat exchanger R4T
- **e** Liquid pipe thermistor, sub-cool heat exchanger R5T
- **f** Oil separator
- **g** Compressor M1C
- **h** Oil return valve Y2S
- **i** Charge port
- **j** Gas stop valve
- **k** Liquid stop valve
- **l** Service port
- **m** Main expansion valve Y1E
- **n** Sub-cool expansion Valve Y2E
- **o** Low pressure sensor S1NPL
- **p** 4-way valve Y1S
- **q** Accumulator inlet thermistor R3T
- **r** Refrigerant high pressure sensor S1NPH
- **s** High pressure switch S1PH
- **t** Compressor (M1C) discharge thermistor R21T)
- **u** Compressor (M1C) body thermistor R8T)
- **v** Filter
- **w** Gas pipe thermistor, sub-cool heat exchanger R6T
- **x** Liquid receiver
- **y** Heat exchanger
- **z** De-icer thermistor, outdoor heat exchanger R7T
- **aa** Filter
- **ab** Oil return valve Y3S
- **ac** Filter
- **ad** 4-way valve Y5S
- **ae** Heat storage vessel
- **af** Storage vessel expansion valve Y4E

6.4.8 Component overview: RYYQ14~16U units

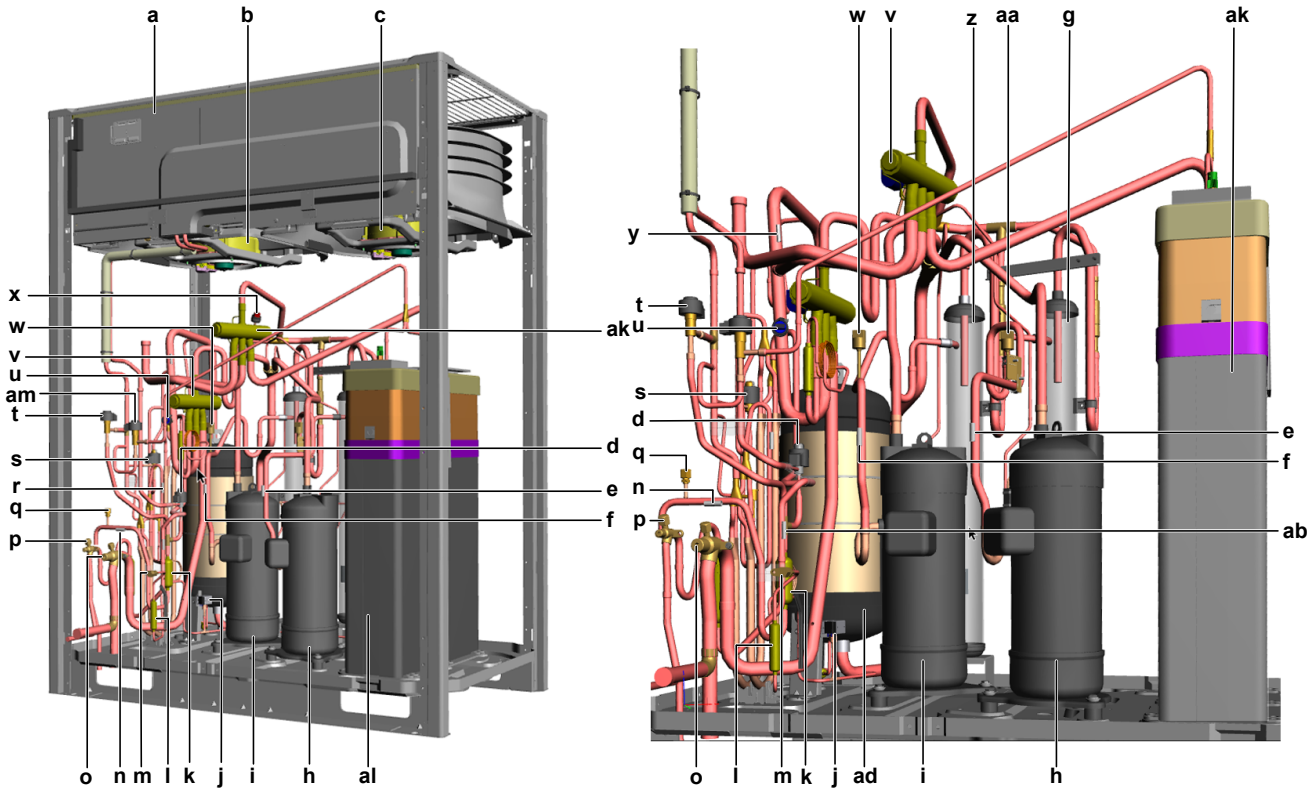

- **a** Switchbox, for details see "6.5 Switchbox overview" [▶ 373].
- **b** Fan motor M1F
- **c** Fan motor M2F
- **d** Liquid cooling expansion valve Y3E
- **e** Compressor (M1C) discharge thermistor R21T
- **f** Compressor (M2C) discharge thermistor R22T
- **g** Oil separator
- **h** Compressor M1C + body thermistor R8T
- **i** Compressor M2C + body thermistor R9T
- **j** Oil return valve Y2S
- **k** Filter
- **l** Filter
- **m** Charge port
- **n** Liquid pipe thermistor, outdoor heat exchanger R4T
- **o** Gas stop valve
- **p** Liquid stop valve
- **q** Service port
- **r** Gas pipe thermistor, sub-cool heat exchanger R6T
- **s** Sub-cool expansion Valve Y2E
- **t** Main expansion valve Y1E
- **u** Low pressure sensor S1NPL
- **v** 4-way valve Y1S
- **w** High pressure switch S2PH
- **x** Refrigerant high pressure sensor S1NPH
- **y** Accumulator inlet thermistor R3T
- **z** Oil separator
- **aa** High pressure switch S1PH
- **ab** Liquid pipe thermistor, sub-cool heat exchanger R5T
- **ac** Filter
- **ad** Accumulator
- **ae** Heat exchanger
- **af** De-icer thermistor, outdoor heat exchanger R7T
- **ag** Filter
- **ah** Oil return valve Y3S
- **ai** Filter
- **aj** Oil return valve Y4S
- **ak** 4-way valve Y5S
- **al** Heat storage vessel
- **am** Storage vessel expansion valve Y4E

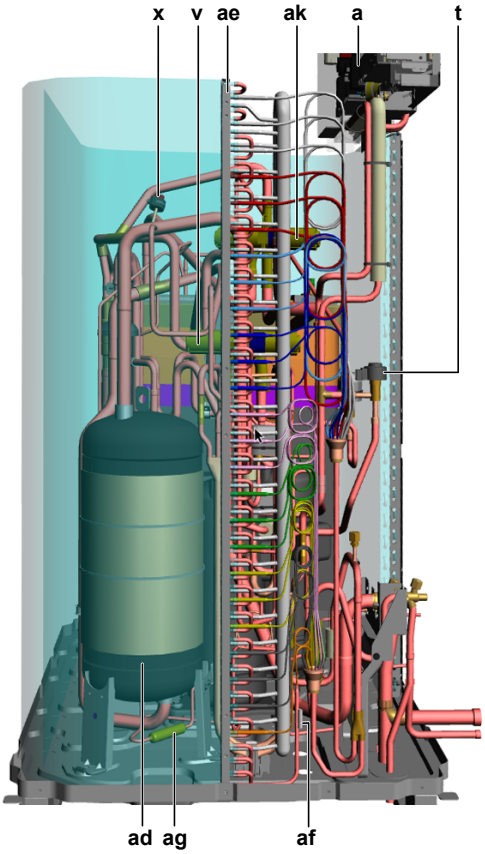

- **a** Switchbox, for details see "6.5 Switchbox overview" [▸ 373].
- **b** Fan motor M1F
- **c** Fan motor M2F
- **d** Liquid cooling expansion valve Y3E
- **e** Compressor (M1C) discharge thermistor R21T
- **f** Compressor (M2C) discharge thermistor R22T
- **g** Oil separator
- **h** Compressor M1C + body thermistor R8T
- **i** Compressor M2C + body thermistor R9T
- **j** Oil return valve Y2S
- **k** Filter
- **l** Filter
- **m** Charge port
- **n** Liquid pipe thermistor, outdoor heat exchanger R4T
- **o** Gas stop valve
- **p** Liquid stop valve
- **q** Service port
- **r** Gas pipe thermistor, sub-cool heat exchanger R6T
- **s** Sub-cool expansion Valve Y2E
- **t** Main expansion valve Y1E
- **u** Low pressure sensor S1NPL
- **v** 4-way valve Y1S
- **w** High pressure switch S2PH
- **x** Refrigerant high pressure sensor S1NPH
- **y** Accumulator inlet thermistor R3T
- **z** Oil separator
- **aa** High pressure switch S1PH
- **ab** Liquid pipe thermistor, sub-cool heat exchanger R5T
- **ac** Filter
- **ad** Accumulator
- **ae** Heat exchanger
- **af** De-icer thermistor, outdoor heat exchanger R7T
- **ag** Filter
- **ah** Oil return valve Y3S
- **ai** Filter
- **aj** Oil return valve Y4S
- **ak** 4-way valve Y5S
- **al** Heat storage vessel
- **am** Storage vessel expansion valve Y4E

6.4.9 Component overview: RYYQ18~20U units

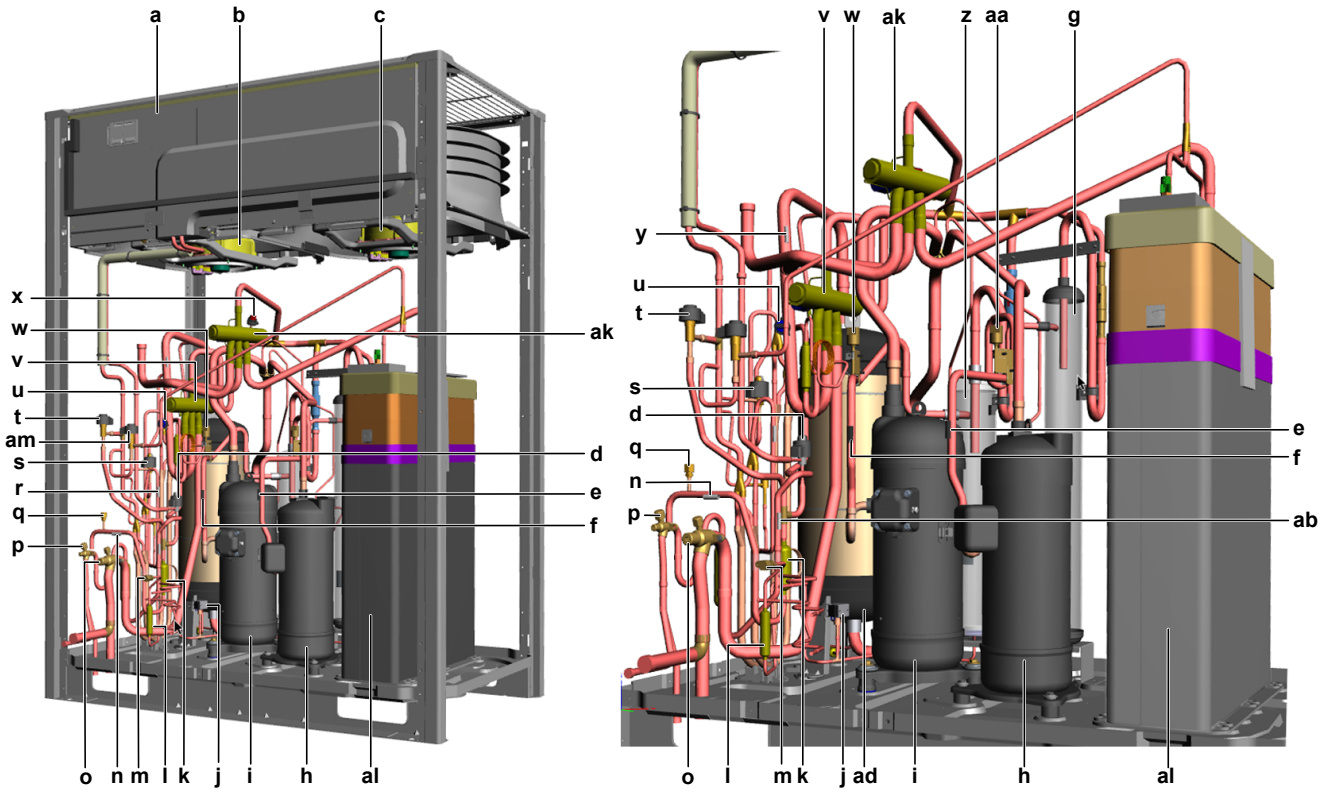

- **a** Switchbox, for details see "6.5 Switchbox overview" [▶ 373].
- **b** Fan motor M1F
- **c** Fan motor M2F
- **d** Liquid cooling expansion valve Y3E
- **e** Compressor (M1C) discharge thermistor R21T
- **f** Compressor (M2C) discharge thermistor R22T
- **g** Oil separator
- **h** Compressor M1C + body thermistor R8T
- **i** Compressor M2C + body thermistor R9T
- **j** Oil return valve Y2S
- **k** Filter
- **l** Filter
- **m** Charge port
- **n** Liquid pipe thermistor, outdoor heat exchanger R4T
- **o** Gas stop valve
- **p** Liquid stop valve
- **q** Service port
- **r** Gas pipe thermistor, sub-cool heat exchanger R6T
- **s** Sub-cool expansion Valve Y2E
- **t** Main expansion valve Y1E
- **u** Low pressure sensor S1NPL
- **v** 4-way valve Y1S
- **w** High pressure switch S2PH
- **x** Refrigerant high pressure sensor S1NPH
- **y** Accumulator inlet thermistor R3T
- **z** Oil separator
- **aa** High pressure switch S1PH
- **ab** Liquid pipe thermistor, sub-cool heat exchanger R5T
- **ac** Filter
- **ad** Accumulator
- **ae** Heat exchanger
- **af** De-icer thermistor, outdoor heat exchanger R7T
- **ag** Filter
- **ah** Oil return valve Y3S
- **ai** Filter
- **aj** Oil return valve Y4S
- **ak** 4-way valve Y5S
- **al** Heat storage vessel
- **am** Storage vessel expansion valve Y4E

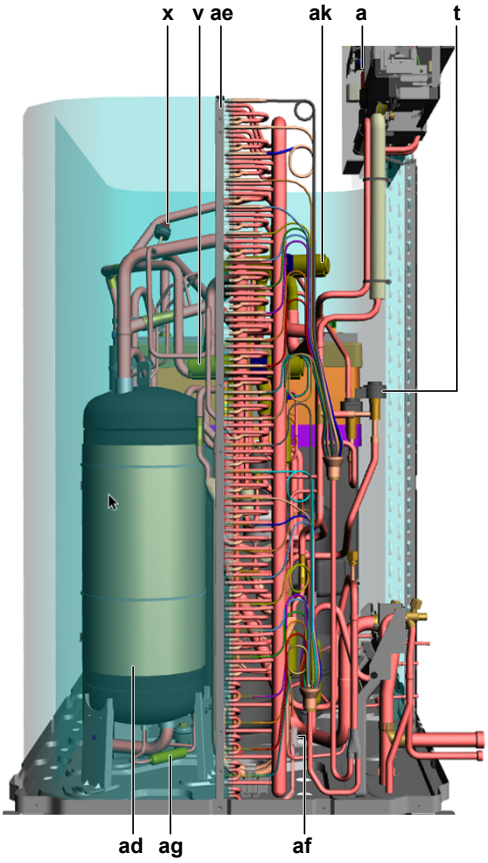

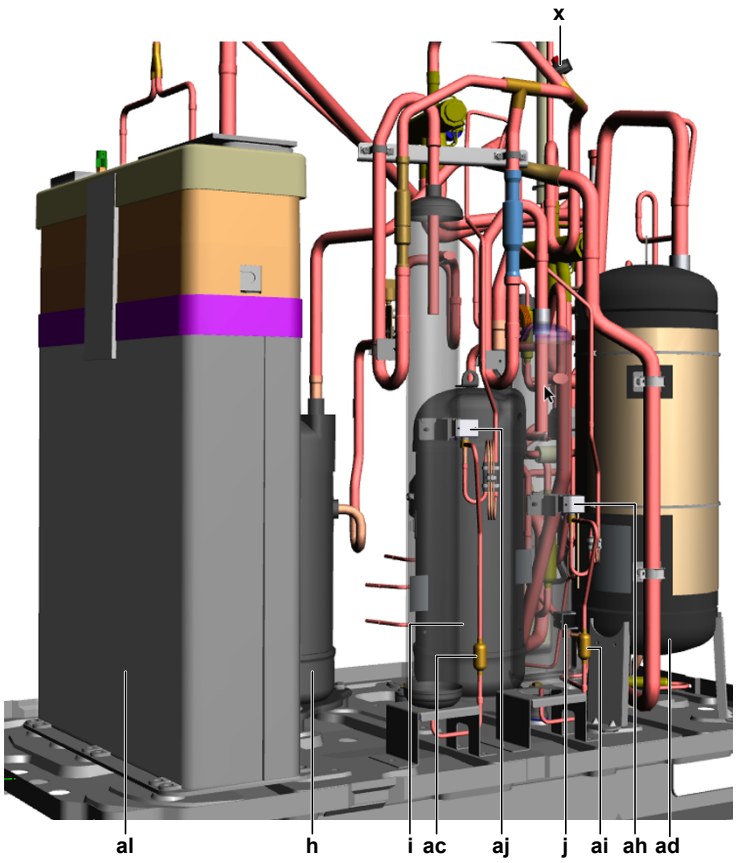

- **a** Switchbox, for details see "6.5 Switchbox overview" [▶ 373].
- **b** Fan motor M1F
- **c** Fan motor M2F
- **d** Liquid cooling expansion valve Y3E
- **e** Compressor (M1C) discharge thermistor R21T
- **f** Compressor (M2C) discharge thermistor R22T
- **g** Oil separator
- **h** Compressor M1C + body thermistor R8T
- **i** Compressor M2C + body thermistor R9T
- **j** Oil return valve Y2S
- **k** Filter
- **l** Filter
- **m** Charge port
- **n** Liquid pipe thermistor, outdoor heat exchanger R4T
- **o** Gas stop valve
- **p** Liquid stop valve
- **q** Service port
- **r** Gas pipe thermistor, sub-cool heat exchanger R6T
- **s** Sub-cool expansion Valve Y2E
- **t** Main expansion valve Y1E
- **u** Low pressure sensor S1NPL
- **v** 4-way valve Y1S
- **w** High pressure switch S2PH
- **x** Refrigerant high pressure sensor S1NPH
- **y** Accumulator inlet thermistor R3T
- **z** Oil separator
- **aa** High pressure switch S1PH
- **ab** Liquid pipe thermistor, sub-cool heat exchanger R5T
- **ac** Filter
- **ad** Accumulator
- **ae** Heat exchanger
- **af** De-icer thermistor, outdoor heat exchanger R7T
- **ag** Filter
- **ah** Oil return valve Y3S
- **ai** Filter
- **aj** Oil return valve Y4S
- **ak** 4-way valve Y5S
- **al** Heat storage vessel
- **am** Storage vessel expansion valve Y4E

6.5 Switchbox overview

6.5.1 Single fan units

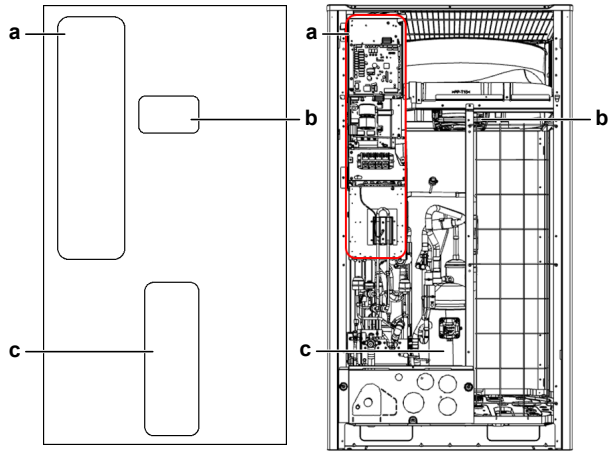

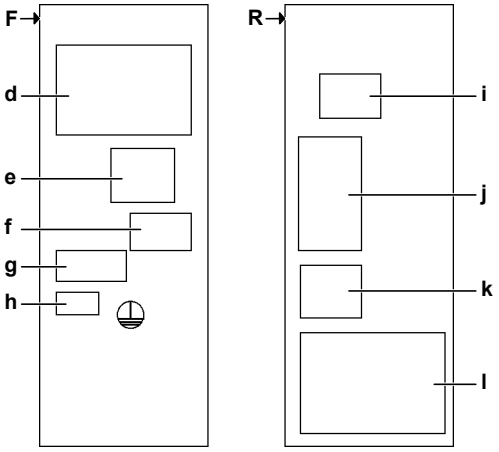

- **a** Switchbox
- **b** Fan motor (M1F)
- **c** Compressor (M1C)

5

- **F** Front view
- **R** Rear view
- **d** Main PCB (A1P)
- **e** Optional cool/heat selector PCB (A5P)
- **f** Rectifier voltage check connector (X3A)
- **g** Main supply connection terminal (X1M)
- **h** M1F (X1A)
- **i** Reactor (L1R)
- **j** Noise filter PCB (A2P)
- **k** Fan inverter PCB (A4P)
- **l** Inverter PCB (A3P)

6.5.2 Double fan units

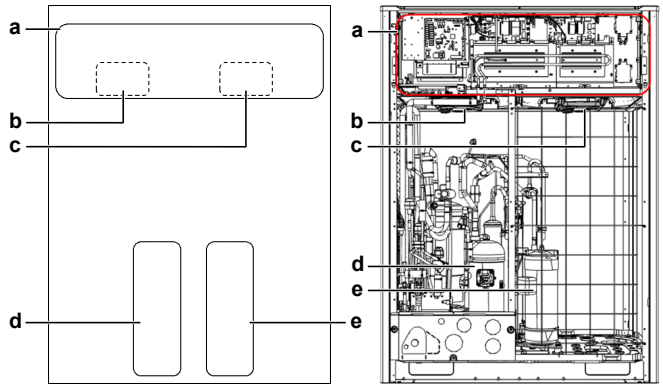

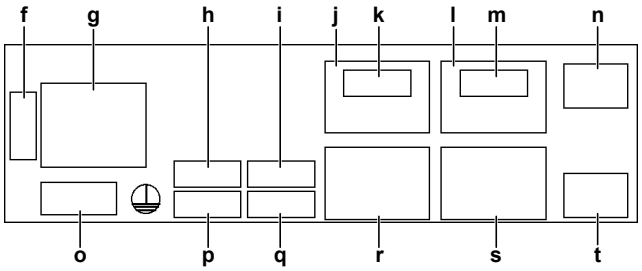

- **a** Switchbox
- **b** Fan motor (M1F)
- **c** Fan motor (M2F)
- **d** Compressor (M2C)[1]
- **e** Compressor (M1C)

- **f** Optional cool/heat selector PCB (A8P)
- **g** Main PCB (A1P)
- **h** M1F (X1A)
- **i** Fan inverter PCB (A4P)
- **j** Noise filter PCB (A5P)[1]
- **k** Rectifier voltage check connector for A6P (X6A)[1]
- **l** Noise filter PCB (A2P)
- **m** Rectifier voltage check connector for A3P (X5A)
- **n** Reactor for A6PL2R)[1]
- **o** Main supply connection terminal (X1M)
- **p** M2F connector (X2A)
- **q** Fan inverter PCB for M2F (A7P)
- **r** Inverter PCB for M2C (A6P)[1]
- **s** Inverter PCB for M1C (A3P)
- **t** Reactor for A3P (L1R)

[1] NOT equipped in RXYTQ10+12 units.

6.6 Safety devices

Wiring symbol	Component	Description	Trigger	Error	Action type
T1A	Current sensor	Earth leakage protection	T1A > 75 mA (± 25%)	E2	Drop control
S1PH, S2PH	High pressure switch	High pressure protection	High pressure >4.0 MPa (+0.00, -0.15) Reset: high pressure <3.0 MPa ±0.15	E3	Forced stop
S1NPH	High pressure sensor	High pressure protection	High pressure >3.72 MPa Retry 3 times in 40 minutes	E3	Drop control
			High pressure >3.55 MPa in cooling mode Reset: High pressure <3.04 MPa		Drop control
			High pressure >3.04 MPa in cooling mode Reset: High pressure <2.89 MPa		Drop control
			High pressure >4.15 MPa (means high pressure switch failed to open)	JA	Forced stop
S1NPL	Low pressure sensor	Low pressure protection	Low pressure <0.07 MPa Retry 3 times in 60 minutes	E4	Drop control
			Low pressure <0.35 MPa in cooling mode Reset: Low pressure >0.4 MPa		Drop control
			Low pressure <0.17 MPa in heating mode Reset: Low pressure >0.23 MPa		Drop control
			Low pressure <0.07 MPa 4th retry in 60 minutes	E4	Forced stop
M1C, M2C	Compressor JT16KBVDYR@S	Current protection	Current >28 A		Drop control
M1C, M2C	Compressor JT16KBVDYR@S	Current protection	When current >28 A, three times in 60 minutes	L8	Forced stop
M1C, M2C	Compressor JT1GUVDYR@BA	Current protection	When current >17 A		Drop control
M1C, M2C	Compressor JT1GUVDYR@BA	Current protection	When current >17.6 A, three times in 60 minutes	L8	Forced stop
R21T, R22T	Discharge pipe thermistor	Overheat protection	Temperature >135˚C for 2 times within 100 minutes Reset: Temperature <95˚C	F3	Forced stop
			Temperature >108˚C Reset: Temperature <95˚C		Drop control
R8T, R9T	Compressor body thermistor	Overheat protection	Temperature >108˚C		Drop control

Wiring symbol	Component	Description	Trigger	Error	Action type
R8T, R9T	Compressor body thermistor	Overheat protection	Temperature >135˚C for 3 times within 100 minutes Reset: Temperature <100˚C	F3	Forced stop
R21T, R22T	Discharge pipe thermistor	Overheat protection	Temperature >120˚C for 2 times within 10 minutes Reset: Temperature <100˚C	F3	Forced stop
R8T, R9T	Compressor body thermistor	Overheat protection	Temperature >120˚C for 2 times within 10 minutes Reset: Temperature <100˚C	F3	Forced stop
A3P, A6P, A4P, A7P	Radiation fin temperature	Overheat protection	Temperature >110˚C Reset: Temperature <107˚C		Drop control
			Temperature >114˚C	L4	Forced stop

Drop control is visible through service checker tool.

Retries are monitored by field setting Mode 1 (monitor mode): 1-23/24/25. See "6.9 Field settings" [▸ 380].

Forced stops will trigger error codes. Active errors are visible on the outdoor unit 7-Segment LED Display, remote controller displays and central controller devices. To consult the error history, see "To check the error history" in "2 Troubleshooting" [▸ 12].

6.7 Field information report

See next page.

In case a problem occurred on the unit which could not be resolved by using the content of this service manual or in case you have a problem which could be resolved but of which the manufacturer should be notified, we advise you to contact your distributor.
To facilitate the investigation, additional information is required. Please fill out the following form before contacting your distributor.

FIELD INFORMATION REPORT	
Key person information	
Name:	Company name:
Your contact details Phone number:	E-mail address:
Site address:	
Your reference:	Date of visit:
Claim information	
Title:	
Problem description:	
Error code:	Trouble date:
Problem frequency:	
Investigation steps done:	
Insert picture of the trouble.	
Current situation (solved, not solved,…):	
Countermeasures taken:	
Comments and proposals:	
Part available for return (if applicable):	

Application information
Application (house, apartment, office,…):
New project or reimbursement:
Piping layout / Wiring layout (simple schematic):

Unit / Installation information	
Model name:	Serial number:
Installation / commissioning date:	Software version user interface:
Software version outdoor PCB:	

Provide pictures of the field settings overview (viewable on the user interface).

6.8 Service tools

1. For an overview of the available service tools, check the Daikin Business Portal (authentication required).
2. Go to the tab After-sales support on the left navigation pane and select Technical support.

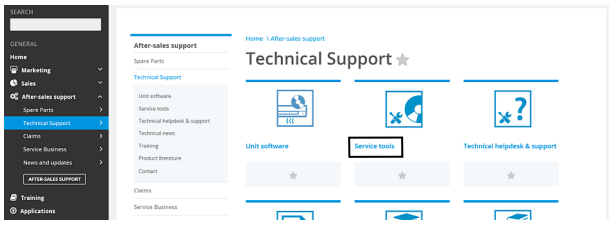

3. Click the button Service tools. An overview of the available service tools for the different products is shown. Also additional information on the service tools (instruction, latest software) can be found here.

6.9 Field settings

6.9.1 To access mode 1 or 2

1. Check if the unit is in normal mode. If NOT in normal mode, push BS1 to return to normal mode. 7-segment display indication state will be as shown:

   Result:

2. 7-segment display indications:

   Off

   Blinking

   On

3. BS1 is used to change the mode you want to access.

Access	Action
Mode 1	Push BS1 one time. 7-segment display indication changes to:
Mode 2	Push BS1 for at least 5 seconds. 7-segment display indication changes to:

INFORMATION

To access the field settings on BRC1E or BRC1H controller, see the installer reference guide of the specific controller and the indoor unit installer reference guide for more information.

6.9.2 To use mode 1

Mode 1 is used to monitor the status of the unit.

What	How
Changing and accessing the setting in mode 1	Once mode 1 is selected (push BS1 one time), you can select the wanted setting. It is done by pushing BS2. Accessing the selected setting's value is done by pushing BS3 one time.
To quit and return to the initial status	Press BS1.

Example:

Checking the content of parameter [1-10] (to know how many indoor units are connected to the system).

[A-B]=C in this case defined as: A=1; B=10; C=the value we want to know/monitor:

1. Make sure the 7-segment display indication is as during normal operation (default situation when shipped from factory). 7-segment display indications:

   Off

▭ Blinking

▬ On

2 Push BS1 one time.

Result: Mode 1 is accessed: 1.0.0

3 Push BS2 10 times.

Result: Mode 1 setting 10 is addressed: 1.8.8

4 Push BS3 one time; the value which is returned (depending on the actual field situation), is the amount of indoor units which are connected to the system.

Result: Mode 1 setting 10 is addressed and selected, return value (e.g. 15) is monitored information (15 indoor units connected to the system).

5 To leave the monitoring function, push BS1 one time.

6.9.3 To use mode 2

The master unit should be used to input field settings in mode 2.

Mode 2 is used to set field settings of the outdoor unit and system.

What	How
Changing and accessing the setting in mode 2	Once mode 2 is selected (push BS1 for more than 5 seconds), you can select the wanted setting. It is done by pushing BS2. Accessing the selected setting's value is done by pushing BS3 1 time.
To quit and return to the initial status	Press BS1.
Changing the value of the selected setting in mode 2	▪ Once mode 2 is selected (push BS1 for more than 5 seconds) you can select the wanted setting. It is done by pushing BS2. ▪ Accessing the selected setting's value is done by pushing BS3 1 time. ▪ Now BS2 is used to select the required value of the selected setting. ▪ When the required value is selected, you can define the change of value by pushing BS3 1 time. ▪ Press BS3 again to start operation according to the chosen value.

Example:

Checking the content of parameter [2-18] (to define the high static pressure setting of the outdoor unit's fan).

[A-B]=C in this case defined as: A=2; B=18; C=the value we want to know/change

1 Make sure the 7-segment display indication is as during normal operation (default situation when shipped from factory). 7-segment display indications:

⬚ Off

▭ Blinking

▬ On

2 Push BS1 for over 5 seconds.

Result: Mode 2 is accessed: 2.0.0.

3 Push BS2 18 times.

Result: Mode 2 setting 18 is addressed: 2.0.8.

4 Push BS3 1 time; the value which is returned (depending on the actual field situation), is the status of the setting. In the case of [2-18], default value is "0", which means the function is not active.

Result: Mode 2 setting 18 is addressed and selected, return value (e.g. 0) is the current setting situation.

5 To change the value of the setting, push BS2 till the required value appears on the 7-segment display indication. When achieved, define the setting value by pushing BS3 1 time. To start operation according to the chosen setting, confirm again by pushing BS3.

6 To leave the monitoring function, push BS1 1 time.

6.9.4 Mode 1: Field settings

In mode 1 you can monitor operation of the unit. The LEDs give a binary representation of the setting/value number.

(*) This column shows the number of times you have to push the SET button (BS2) to access the field setting.

N°(*)	Item	Display	Content	
0	Main/sub outdoor unit	1.00	-	Undefined
			0	Main unit
			1	Sub 1 unit
			2	Sub 2 unit
1	Low noise operation status	1.01	0	Not in low noise operation
			1	In low noise operation
2	Demand operation status	1.02	0	Not in demand operation
			1	In demand operation
3	Automatic back up operation status	1.03	0	Off
			1	On
4	Defrost selection set	1.04	0	Slow
			1	Normal
			2	Quick
5	Te set	1.05	0	Automatic
			1	3 ˚C
			2	6 ˚C
			3	7 ˚C
			4	8 ˚C
			5	9 ˚C
			6	10 ˚C
			7	11 ˚C
6	Tc set	1.06	0	Automatic
			1	41 ˚C
			2	42 ˚C
			3	43 ˚C
			4	44 ˚C
			5	45 ˚C
			6	46 ˚C
			7	48 ˚C
7	Cool/heat unified address	1.07		Possible 0 ˜ 31
8	Low noise / demand address	1.08		Possible 0 ˜ 31
9	Airnet address	1.09		Possible 0 ˜ 63
10	Number of indoor units	1.10		Shows total amount of connected indoor units on a single F1/F2 in line. Possible 0 ˜ 63

N°(*)	Item	Display	Content	
13	Number of outdoor units	1.13		Shows total amount of outdoor units connected on a single F1/F2 out line. Possible 0 ~ 63
15	Number of units in zone	1.15		Possible 0 ~ 63
16	Number of all indoor units	1.16		Shows total amount of indoor units of several systems if F1/F2 out is wired between systems. Possible 0 ~ 128
17	Latest error code	1.17		Displays latest error causing forced stop
18	2nd latest error code	1.18		Displays 2nd latest error causing forced stop
19	3rd latest error code	1.19		Displays 3rd latest error causing forced stop
20	Software ID upper code	1.20		Use set (BS2) to view full code
21	Outdoor unit capacity	1.21	0	No data
			3	8 HP
			4	10 HP
			5	12 HP
			6	14 HP
			7	16 HP
			8	18 HP
			9	20 HP
22	Software id lower code	1.22		Displays lower code for software ID
23	Latest retry	1.23		Displays latest reason causing retry
24	2nd latest retry	1.24		Displays 2nd latest reason causing retry
25	3rd latest retry	1.25		Displays 3rd latest reason causing retry
26	Number of D3Net transmission retry	1.26		Possible 0 ~ 63
27	Number of ACCNS transmission retry	1.27		Possible 0 ~ 63
28	Number of outdoor units on a multi system	1.28		Number of outdoor units on Q1/ Q2 line in multi combination
29	Result of last manual refrigerant leak check	1.29		Possible 0 ~ 9.9
30	Result of 2nd last manual refrigerant leak check	1.30		Possible 0 ~ 9.9
31	Result of 3rd last manual refrigerant leak check	1.31		Possible 0 ~ 9.9
32	Outdoor board status judgement	1.32	0	Standart judgement
			1	Normal
			2	Abnormal
33	Number of abnormal outdoor board status judgement	1.33		Possible 0 ~ 15
34	Remaining days until next refrigerant leak check operation	1.34		Off: refrigerant leak check not active or possible 1 ~ 366

N°(*)	Item	Display	Content	
35	Result of last automatic refrigerant leak check	1.35	1	Normal
			2	Outdoor temperature out of range
			3	Indoor temperature out of range
36	Result of 2nd last automatic refrigerant leak check	1.36	1	Normal
			2	Outdoor temperature out of range
			3	Indoor temperature out of range
37	Result of 3rd last automatic refrigerant leak check	1.37	1	Normal
			2	Outdoor temperature out of range
			3	Indoor temperature out of range
38	Number of connected RA units	1.38		RA units connected through BP unit. Possible 0 ~ 63
39	Number of connected HXY-A unit	1.39		VRV LT Hydrobox unit. Possible 0 ~ 63
40	Cooling comfort set	1.40		Setting by mode 2-81. Possible 0 ~ 3
41	Heating comfort set	1.41		Setting by mode 2-82. Possible 0 ~ 3
42	High pressure [MPa]	1.42		S1NPH
43	Low pressure [MPa]	1.43		S1NPL
44	Compressor frequency [Hz]	1.44		Total frequency of 1 module
45	Y1E opening pulse	1.45		Pulses/10
46	Discharge temperature [˚C]	1.46		R21T
47	Discharge temperature [˚C]	1.47		R22T
48	Compressor body temperature [˚C]	1.48		R8T
49	Compressor body temperature [˚C]	1.49		R9T
50	Ambient temperature [˚C]	1.50		R1T
51	Accumulator inlet temperature [˚C]	1.51		R3T
52	Gas temperature, subcool outlet [˚C]	1.52		R6T
53	De-icing thermistor temperature [˚C]	1.53		R7T
54	Compressor operating hours	1.54		Total hours/100
55	Automatic charging completion flag	1.55	0	Unfinished
			1	Completed
56	Y2E opening pulse	1.56		Pulses/10

6.9.5 Mode 2: Field settings

In mode 2 you can make field settings to configure the system. The LEDs give a binary representation of the setting/value number.
(*) This column shows the number of times you have to push the SET button (BS2) to access the field setting.
(**) The bold content is the default setting.

N°(*)	Item	Display	Content(**)	
0	Cool/heat selection	2.00	0	**Individual**
			1	Master (DTA104A6* option required)
			2	Slave (DTA104A6* option required)
1	Cool/heat unified address	2.01	**0**	Possible 0-31
2	Low noise/demand address	2.02	**0**	Possible 0-31
5	Indoor unit forced fan H	2.05	**0**	**Disabled**
			1	Enabled
6	Indoor unit forced thermo ON	2.06	**0**	**Disabled**
			1	Enabled
8	Te setting	2.08	**0**	**Auto**
			1	3 ˚C
			2	6 ˚C
			3	7 ˚C
			4	8 ˚C
			5	9 ˚C
			6	10 ˚C
			7	11 ˚C
9	Tc setting	2.09	**0**	**Auto**
			1	41 ˚C
			2	42 ˚C
			3	43 ˚C
			4	44 ˚C
			5	45 ˚C
			6	46 ˚C
			7	48 ˚C
10	Defrost selection setting	2.10	0	Short
			1	**Normal**
			2	Long
12	Low noise/demand operation by external input	2.12	**0**	**Disabled**
			1	Enabled
13	AirNet address	2.13	**0**	Possible 0-63 (0 is not a valid airnet address)

N°(*)	Item	Display	Content(**)	
14	Additional refrigerant charge amount	2.14	**0**	See "Additional refrigerant charge amount" [▶ 315]
18	Outdoor unit fan high static pressure setting	2.18	**0**	**Deactivated**
			1	Activated
20	Additional refrigerant charge operation	2.20	**0**	**Off**
			1	On
21	Refrigerant recovery mode	2.21	**0**	**Off**
			1	On
22	Nighttime low noise operation level setting (combined with 2-26 and 2-27) [level1 > level2 > level3]	2.22	**0**	**Off**
			1	Level 1
			2	Level 2
			3	Level 3
25	Low noise operation level setting (if LNO triggered by external input) (combined with 2-12) [level1 > level2 > level3]	2.25	1	Level 1
			2	**Level 2**
			3	Level 3
26	Nighttime low noise operation start time setting (combined with 2-22)	2.26	1	20h00
			2	**22h00**
			3	24h00
27	Nighttime low noise operation stop time setting (combined with 2-22)	2.27	1	6h00
			2	7h00
			3	**8h00**
28	Power transistor check mode	2.28	**0**	**Off**
			1	On
29	Capacity priority in low noise operation mode	2.29	**0**	**Off**
			1	On
30	Level setting for demand control step 1	2.30	1	60%
			2	65%
			3	**70%**
			4	75%
			5	80%
			6	85%
			7	90%
			8	95%
31	Level setting for demand control step 2	2.31	**1**	**40%**
			2	50%
			3	55%

N°(*)	Item	Display	Content(**)	
32	Forced demand setting	2.32	**0**	**Off**
			1	Step 1 (2-30) on
			2	Step 2 (2-31) on
34	Forced low fan speed to thermo on indoor units if total indoor thermo on > 130% connection ratio	2.34	**0**	**Cooling and heating**
			1	Heating only
			2	Never
35	Outdoor unit is lower than the indoor units and height difference > 40m	2.35	0	40m < height difference < 90m
			1	**Height difference < 40m**
38	Emergency operation - main unit	2.38	**0**	**Not in emergency operation**
			1	Inverter 1 - M1C - OFF
			2	Inverter 2 - M2C - OFF
			3	Main unit off
39	Emergency operation - sub 1 unit	2.39	**0**	**Not in emergency operation**
			1	Inverter 1 - M1C - OFF
			2	Inverter 2 - M2C - OFF
			3	Sub 1 unit OFF
40	Emergency operation - sub 2 unit	2.40	**0**	**Not in emergency operation**
			1	Inverter 1 - M1C - OFF
			2	Inverter 2 - M2C - OFF
			3	Sub 2 unit OFF
48	Snow sensor	2.48	**0**	**Off**
			1	On
49	Outdoor unit is above the indoor units and height difference > 50m	2.49	**0**	**Height difference < 50m**
			1	50m < height difference < 90m
50	Priority during defrost on continuous heating models	2.50	**0**	**Indoor priority**
			1	Defrost priority
51	Multi outdoor main/sub setting	2.51	**0**	**Auto**
			1	Forced master
			2	Forced sub 1
			3	Forced sub 2
52	Drainpan heater output signal	2.52	**0**	**Off**
			1	Compressor operation output at X17A
			2	Drainpan heater function activated, output at X10A
			3	Drainpan heater function activated, output at X10A

N°(*)	Item	Display	Content(**)	
81	Cooling comfort setting	2.81	0	Eco
			1	**Mild**
			2	Quick
			3	Powerful
82	Heating comfort setting	2.82	0	Eco
			1	**Mild**
			2	Quick
			3	Powerful
83	Cool/heat master allocation in case VRV + RA installed together	2.83	0	VRV
			1	**RA**
84	BP initial EV opening in heating mode	2.84	0	400 pls
			1	**500 pls**
			2	600 pls
			3	300 pls
85	Timer - refrigerant leak detection function operation (days)	2.85	**0**	**365**
			1	180
			2	90
			3	60
			4	30
			5	7
			6	1
86	Timer - refrigerant leak detection function performed setting	2.86	**0**	**Off**
			1	Single
			2	Permanent
88	Detailed refrigerant check during test-run	2.88	**0**	**Enabled**
			1	Disabled
90	Multi tenant setting (soft)	2.90	**0**	**Disabled**
			1	Enabled [24 hours]

6.9.6 Overview of field settings for indoor units

The overview lists all possible settings for the indoor units. The availability of the setting depends on the indoor unit type, see "Field settings as per type indoor unit". **Bold content is default setting**.

Mode	1st code	Description function	2nd code	Description selection
10(20)	0	Filter contamination heavy / light	**01**	Filter contamination: light LL 2500 hr / flat 200 hr
			02	Filter contamination: heavy LL 1250 hr / flat 100 hr
	1	Long life filter type	**01**	Long life filter
			02	Super long life filter
			04	Oil guard filter
	2	Air thermistor selection	**01**	Combined control
			02	Only the return air thermistor
			03	Only the remote controller thermistor
	3	Display filter sign	**01**	Display
			02	No display
	4	Spare	--	--
	5	Remote controller thermistor visible by central control device in group wiring P1P2	**01**	No
			02	Yes
	6	Air thermistor selection in group wiring P1P2	**01**	Return air thermistor (individual units)
			02	Thermistor designated by field set 20-2 (see above)
	7	Absence delay detecting time (presence sensor)	**01**	30 minutes
			02	60 minutes
	8	Compensation air sensor heating	**01**	Add 2.0°C to measurement air sensor
			02	Measurement air sensor
	9	Spare	--	--

Mode	1st code	Description function	2nd code	Description selection
11(21)	3	Fan setting of heating	**01**	Standard
			02	Slight increase
			03	Increase
	6	Sensitivity presence sensor	01	High sensitive
			02	Low sensitive
			03	Standard
			04	Disable presence sensor
	7	Airflow adjustment	**01**	Manual setting (see mode 23-6 below)
			02	ESP auto judgment completed
			03	Start ESP auto judgment (if control set to fan only + ON)
	8	Compensation by floor sensor	01	Floor sensor disabled
			02	Air suction temperature priority
			03	Standard
			04	Floor temperature priority
	9	Compensation of floor temperature	01	-4°C
			02	-2°C
			03	No correction
			04	+2°C

Mode	1st code	Description function	2nd code	Description selection
12(22)	0	Optional board KRP1A... output X1X2	**01**	Indoor unit turned ON by thermostat
			02	--
			03	Operation output
			04	Malfunction output
			05	--
	1	T1T2 input signal	**01**	Forced OFF
			02	ON/OFFcontrol
			03	External protection device input
			04	Forced OFF - multi tenant
	2	Thermostat differential to set point	**01**	1.0°C (FXFQ, FXZQ, FXCQ, FXKQ, FXUQ, FXHQ, VKM, Biddle
			02	0.5°C (FXSQ, FXMQ, FXAQ, FXLQ, FXNQ, FXDQ, EKEQM)
	3	OFF by thermostat fan speed	**01**	LL
			02	Set fan speed
			03	OFF
	4	Automatic mode differential	**01**	0°C
			02	1°C
			03	2°C
			04	3°C
			05	4°C
			06	5°C
			07	6°C
			08	7°C
	5	Auto restart after power failure	01	Disabled
			02	Enabled
	6	Fan speed in cooling thermo OFF	01	LL
			02	Set speed
			03	OFF
	9	Forced C/H master	**01**	Disabled (select by cool / heat selection button controller)
			02	ON (not possible by cool / heat selection button controller)

Mode	1st code	Description function	2nd code	Description selection
13(23)	0	Air flow amount setting (ceiling height)	**01**	Standard
			02	High
			03	Extra high
	1	Number of air outlet 4-blow panel	**01**	4-blow directions
			02	3-blow directions
			03	2-blow directions
	2	Swing pattern setting if 4 swing motors	**01**	All direction simultaneously swing
			02	--
			03	Opposite sides synchronization swing
	3	Output to flap motor	**01**	Enabled
			02	Disabled
			03	--
	4	Air flow position setting	01	Draft prevention
			02	Standard
			03	Ceiling soiling prevention
	5	ESP setting phase control motor	**01**	Standard
			02	Increase step 1
			03	Increase step 2
			04	--
	6	External static pressure manual set	01	--
			02	50 Pa
			03	60 Pa
			04	70 Pa
			05	80 Pa
			06	90 Pa
			07	100 Pa
			08	110 Pa
			09	120 Pa
			10	130 Pa
			11	140 Pa
			12	150 Pa
			13	160 Pa
			14	180 Pa
			15	200 Pa
	7	Thermostat swing	01	Equipped
			02	Not equipped

Mode	1st code	Description function	2nd code	Description selection
15(25)	0	Air cleaner	**01**	Not equipped
			02	Equipped
	1	Thermostat OFF excess humidity	**01**	Not equipped
			02	Equipped
	2	Direct duct connection	**01**	Not equipped
			02	Equipped
	3	Drain pump operation heating operation (if humidifier is used)	**01**	Not equipped
			02	Equipped
	4	Filter sign	**01**	By timer
			02	By external input
	5	Independent ventilation	**01**	Not equipped
			02	Equipped
	6	Independent unit	**01**	No
			02	Yes
	9	Demand control	**01**	Not equipped
			02	Equipped

6.9.7 Field settings as per type of indoor unit

The overview lists the availability of the setting per indoor unit type.

Field setting	Code															
Indoor	BRC...	FXKQ-M	FXFQ-B	FXCQ-A	FXSQ-A	FXUQ-A	FXMQ-P	FXHQ-A	FXDQ-A	FXZQ-A	FXAQ-A	FXLQ-P	FXNQ-A	VKM	Biddle	EKEQM
20	0	01	01	01	01	01	01	01	01	01	01	01	01	01	01	01
	1	na	01	01	na	01	na	01	04	01	01	na	na	03	01	01
	2	02	02	02	02	02	02	02	01	02	03	02	03	na	03	02
	3	03	02	01	02	01	01	01	01	01	01	01	02	02	02	01
	4	spare														
	5	na	02	01	02	01	02	01	01	01	02	02	02	na	01	02
	6	na	02	01	02	01	02	01	01	01	02	02	02	na	01	01
	7	na	na	01	na	01	na	na	01	01	na	na	na	na	na	na
	8	na	02	01	na	01	na	02	01	02	na	na	na	na	na	01
	9	spare														
21	0	spare														
	1	spare														
	2	spare														
	3	na	01	01	na	01	na	01	01	01	na	na	na	na	na	na
	4	spare														
	5	spare														
	6	na	na	03	na	03	na	na	04	03	na	na	na	na	na	na
	7	na	na	na	02	na	01	na	na	na	na	na	na	na	na	na
	8	na	na	03	na	03	na	na	01	03	na	na	na	na	na	na
	9	na	na	03	na	03	na	na	03	03	na	na	na	na	na	na

Field setting	Code															
Indoor	BRC...	FXKQ-M	FXFQ-B	FXCQ-A	FXSQ-A	FXUQ-A	FXMQ-P	FXHQ-A	FXDQ-A	FXZQ-A	FXAQ-A	FXLQ-P	FXNQ-A	VKM	Biddle	EKEQM
22	0	02	01	01	01	01	01	01	01	01	01	01	01	01	01	01
	1	02	01	01	01	01	02	01	01	01	01	04	01	01	02	04
	2	02	02	01	02	01	02	01	02	01	02	02	02	01	01	02
	3	01	01	03	01	01	02	01	01	01	01	01	02	na	01	01
	4	01	03	01	02	03	03	01	01	01	01	01	03	01	01	03
	5	02	02	02	02	02	02	02	02	02	02	02	02	02	02	02
	6	na	02	02	01	02	02	02	02	02	na	02	na	na	02	02
	7	na	01	01	01	01	01	01	01	01	na	01	na	na	01	01
	8	na	01	01	01	01	01	01	01	01	na	01	na	na	01	01
	9	01	01	01	01	01	01	01	01	01	01	01	01	01	01	01
23	0	na	01	01	01	01	01	01	01	01	01	na	na	na	na	na
	1	na	01	na	na	01	na	na	na	01	01	na	na	na	na	na
	2	na	na	01	na	03	na	na	na	01	na	na	na	na	na	na
	3	01	na	na	na	na	na	na	na	01	01	na	na	na	na	na
	4	02	01	01	na	03	na	03	02	01	02	na	na	na	na	na
	5	na	01	01	01	01	01	01	01	01	01	na	na	na	na	na
	6	na	na	na	15	na	02	na	na	na	na	na	na	na	na	na
	7	na	01	01	na	01	na	01	01	01	01	na	na	na	na	na
	8	na	na	na	na	na	na	na	na	na	na	na	na	01	02	01
	9	na	01	01	01	01	01	01	01	01	na	01	na	na	01	01
24	0	spare														
	1	na	01	01	01	01	02	01	01	01	na	na	na	13	na	na
	2	na	01	na	na	na	na	02	na	na	na	na	na	na	na	na
	3	na	01	na	na	na	na	01	na	na	na	na	na	01	na	na
	4	na	01	na	na	na	na	01	na	na	na	na	na	09	na	na
	5	na	01	na	na	na	na	01	na	na	na	na	na	na	na	na
	6	na	na	na	na	na	na	na	na	na	na	na	na	05	na	na
	7	01	01	01	01	01	01	01	01	01	01	02	01	01	01	01
	8	na	02	na	na	na	na	02	na	na	na	na	na	na	na	na
	9	na	01	na	na	na	na	01	na	na	na	na	na	na	04	04
25	0	na	02	02	02	02	01	02	02	02	na	na	na	na	na	na
	1	01	01	01	01	01	02	01	01	01	01	01	02	01	01	02
	2	na	01	01	na	01	na	01	01	01	01	na	na	na	na	na
	3	01	01	01	01	01	01	01	01	01	01	01	01	02	01	02
	4	na	01	01	01	01	01	01	01	01	01	na	na	na	na	na
	5	01	01	01	01	01	01	01	01	01	01	01	01	01	01	02
	6	01	01	01	01	01	01	01	01	01	01	01	01	01	01	02
	7	spare														
	8	spare														
	9	01	01	01	na	na	01	01	01	01	01	01	01	01	01	02

Copyright 2019 Daikin

DAIKIN EUROPE N.V.

Zandvoordestraat 300, B-8400 Oostende, Belgium

ESIE18-14C 2022.02