DAIKIN

VRV 5 S-series

Join us to create a sustainable future

Lower CO_2 equivalent and market-leading efficiencies

Lower CO_2 equivalents

Industry-leading real life efficiencies

Offering like-for-like R-410A flexibility

Variable Refrigerant Temperature

R-32

BLUEVOLUTION

Creating a sustainable future together

Determined to reduce our environmental footprint, we aim to be CO_2-neutral by 2050.
A circular economy, innovation and smart use – these are the stepping stones on our path.

The time to act is now. Join us in creating a sustainable future for HVAC-R.

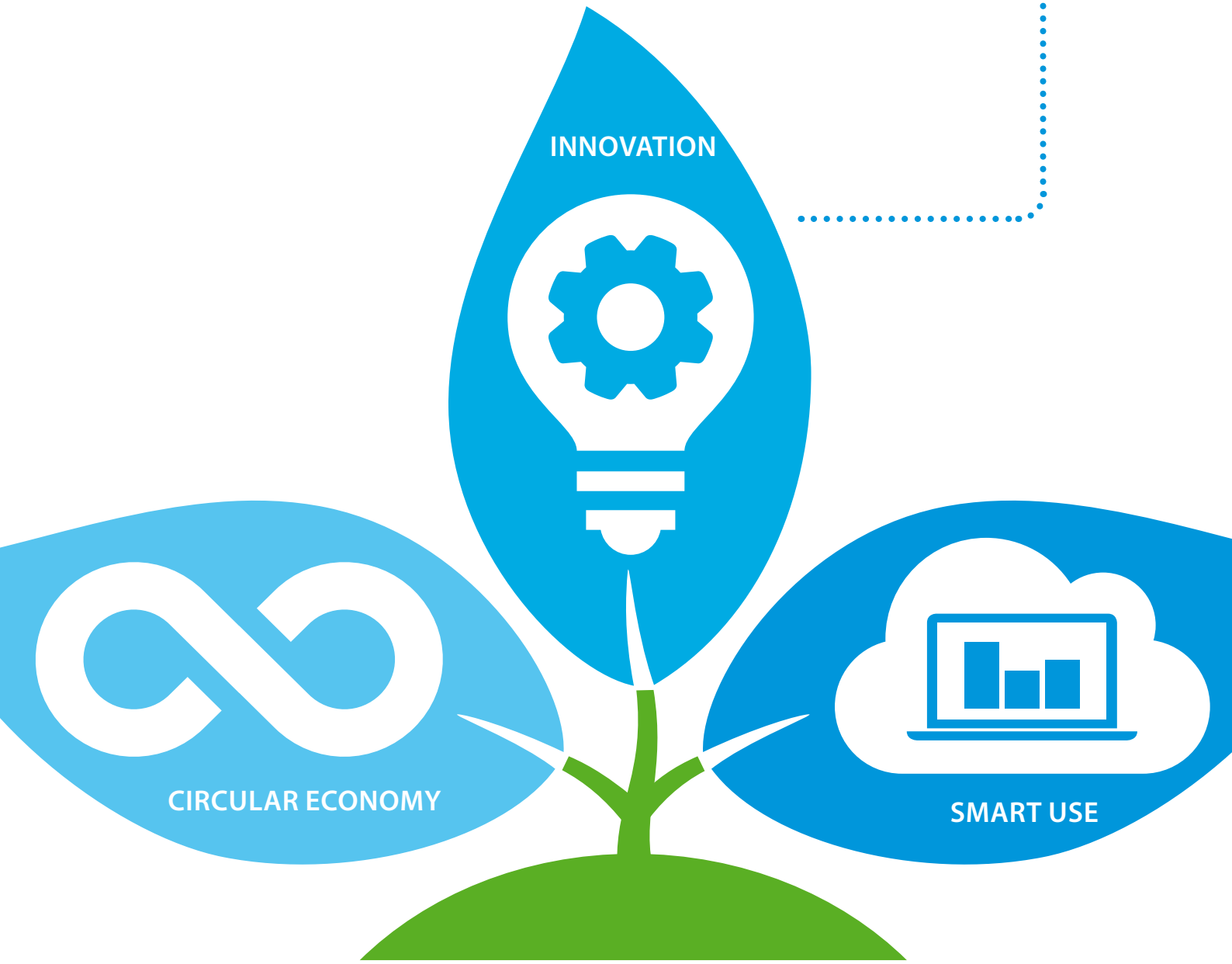

www.daikin.eu/building-a-circular-economy

INNOVATION

2013

First R-32 split
Ururu Sarara

+

2016

Full range of optimised
Split R-32 units
First R-32 Sky Air

+

2017

Full range of
optimised Sky Air R-32
units
Launch of HFO chillers

+

2018

Launch of
Daikin Altherma
heat pump range
on R-32

+

2020

Launch of
VRV 5 on R-32

Continuing our path to lower CO_2 equivalent solutions though **innovation**

Since the launch of Ururu Sarara in 2013, the first air conditioner to use R-32 refrigerant, we have worked to convert our portfolio to lower GWP refrigerants. The launch of the VRV 5 S-series, a completely newly developed unit specifically for R-32 refrigerant, is the latest evolution.

Advantages of R-32

- Lower Global Warming Potential (GWP): only 1/3rd of R-410A
- Lower refrigerant charge: 10% less compared to R-410A
- Higher energy efficiency
- Single component refrigerant, easy to handle and recycle

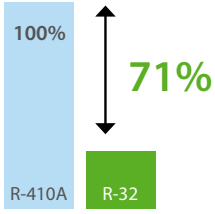

Potential global warming impact

-71%

potential global warming impact

Ahead of the F-gas phase down targets

Thanks to the shift to R-32 we stay ahead of the F-gas regulation phase-down targets. In times where the VRV market is growing fast, this enables us to do our business in a sustainable way, while securing future growth.

With people in mind

Daikin has the ambition to bring you:
- the most sustainable system;
- easy and versatile to install;
- with credible data.

ErP 2021 COMPLIANT

Industry-leading real life efficiencies

The best VRV we ever made

Lower CO_2, equivalent and market-leading versatility

Top sustainability

- ☑ Reduced CO_2 equivalent thanks to the use of R-32 refrigerant
  - R-32 Global Warming Potential (GWP) is 68% lower than R-410A
  - 10% less refrigerant charge
- ☑ Single component refrigerant, easy to re-use and recycle
- ☑ Top sustainability over the entire lifecycle, thanks to market leading real-life seasonal efficiency

R-32

BLUEVOLUTION

ErP 2021 COMPLIANT

Industry-leading serviceability and handling

- ☑ Low-height single fan range
- ☑ Easy to transport thanks to compact design
- ☑ Wide access area to easily reach all key components

Best-in-class design versatility

- ☑ Like-for-like R-410A installation flexibility , allowing indoor unit installation in **rooms with a minimum surface down to 10m²!**
- ☑ Sound pressure down to 39 dB(A) thanks to 5 low sound steps to suit the application
- ☑ Automatic ESP setting up to 45 Pa to allow ducting

Geared for comfort

- ☑ Intuitive online and voice control
- ☑ Interfaces with home control systems
- ☑ Variable Refrigerant Temperature for optimal comfort
- ☑ Specially designed new 10 class indoor unit for small, well-insulated rooms

amazon alexa

works with the Google Assistant

Variable Refrigerant Temperature

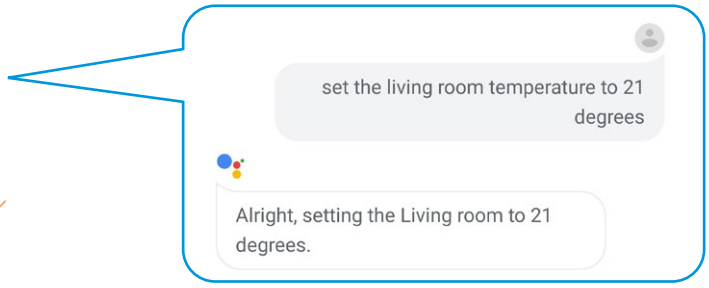

Next generation VRV

New asymmetric fan design
› Two high ESP settings
› Low sound levels

Compact dimensions
› Easy to transport thanks to compact size and single-fan design

New casing design with 4 handles for easy carrying

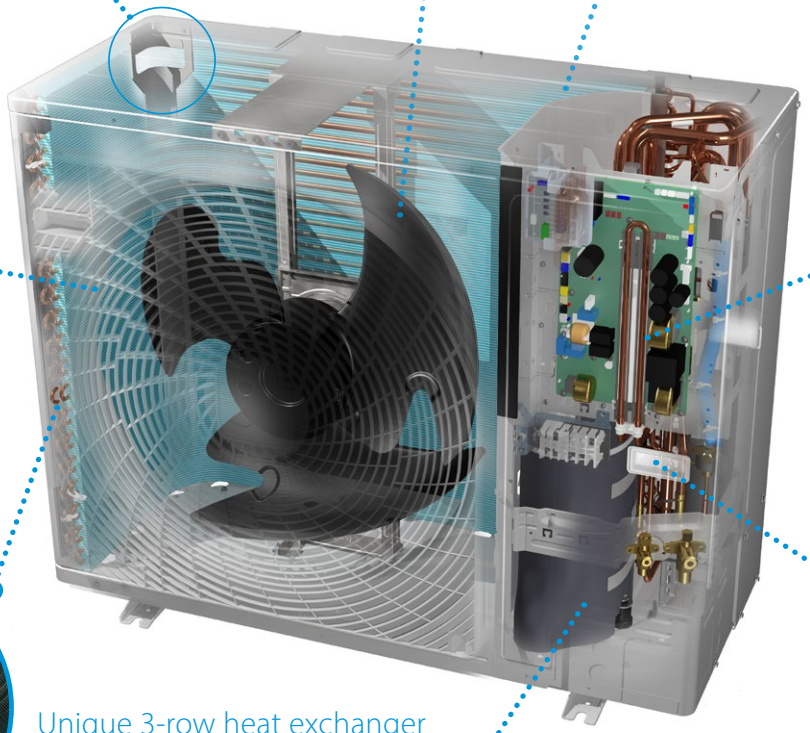

Specially designed grille
› Low pressure drop
› No risk for accidental reach of the fan

Refrigerant cooled PCB
With integrated:
› cool/heat selector input
› 7-segment display for quicker and more precise error and setting reading

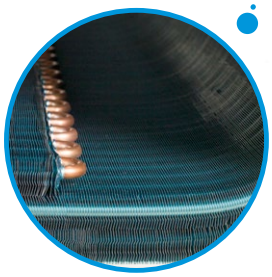

Unique 3-row heat exchanger
› Contributes to top seasonal efficiency

New stop valves
› Repositioned to allow front or side connection
› Brazed for increased reliability

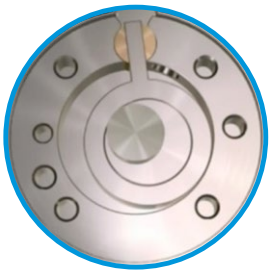

Unique Daikin swing compressor
› No abrasion possible
› No refrigerant leak possible
› High seasonal efficiencies

NEW RXYSA-AV1/AY1

VRV 5 S-series

Lower CO_2 equivalent and market-leading flexibility

- Reduced CO_2 equivalent thanks to the use of lower GWP R-32 refrigerant and lower refrigerant charge
- Top sustainability over the entire lifecycle, thanks to market leading real-life seasonal efficiency
- Low-height single fan range
- Easy to transport thanks to lightweight and compact design
- Wide access area to easily reach all key components
- Offering like-for-like R-410A flexibility
- Specially designed indoor units for R-32, ensuring low sound and maximum efficiency

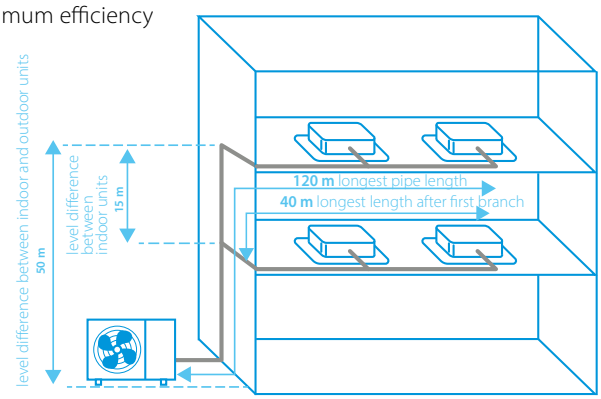

300 m total piping length

RXYSA-AV/AY1

Only 869mm high!

Access all technical information on RXYSA-AV1/AY1 at my.daikin.eu or click here

Reduced CO_2 equivalent

Like-for-like R-410A installation flexibility

ErP 2021 COMPLIANT

Already fully compliant to LOT 21 - Tier 2

Published data with real-life indoor units

Outdoor unit					RXYSA4AV1	RXYSA5AV1	RXYSA6AV1	RXYSA4AY1	RXYSA5AY1	RXYSA6AY1
Capacity range				HP	4	5	6	4	5	6
Cooling capacity	Prated,c			kW	12.1	14.0	15.5	12.1	14.0	15.5
Heating capacity	Prated,h			kW	8.4	9.7	10.7	8.4	9.7	10.7
	Max.	6°CWB		kW	14.2	16.0	18.0	14.2	16.0	18.0
Recommended combination					3xFXSA25A2VEB + 1xFXSA32A2VEB	4xFXSA32A2VEB	2xFXSA32A2VEB + 2xFXSA40A2VEB	3xFXSA25A2VEB + 1xFXSA32A2VEB	4xFXSA32A2VEB	2xFXSA32A2VEB + 2xFXSA40A2VEB
ηs,c				%	324.5	306.1	301.0	312.5	294.8	289.9
ηs,h				%	200.5	185.7	183.6	193.1	178.8	176.8
SEER					8.2	7.7	7.6	7.9	7.4	7.3
SCOP					5.1	4.7	4.7	4.9	4.5	4.5
Maximum number of connectable indoor units					13 (1)	16 (1)	18 (1)	13 (1)	16 (1)	18 (1)
Indoor index connection	Min.				50	62.5	70	50	62.5	70
	Nom.				100	125	140	100	125	140
	Max.				130	162.5	182	130	162.5	182
Dimensions	Unit	HeightxWidthxDepth		mm	869x1,100x460					
Weight	Unit			kg	102					
Sound power level	Cooling	Nom.		dBA	67	68.1	69	67	68.1	69
	Heating	Nom.		dBA	68	69.2	70	68	69.2	70
	Heating	According to ENER LOT21			57	59	60	57	59	60
Sound pressure level	Cooling	Nom.		dBA	49	51	51	49	51	51
	Heating	Nom.		dBA	50	52	52	50	52	52
Operation range	Cooling	Min.~Max.		°CDB	-5.0 ~ 46.0					
	Heating	Min.~Max.		°CWB	-20.0 ~ 16					
Refrigerant	Type/GWP				R-32/675					
	Charge			kg/TCO2Eq	3.40 / 2.30					
Piping connections	Liquid	OD		mm	9.52					
	Gas	OD		mm	15.9					
	Total piping length	system	Actual	m	300					
	Height Difference	OU-IU	Outdoor unit in highest position	m	50					
			Indoor unit in highest position	m	40					
Power supply	Phase/Frequency/Voltage			Hz/V	1~/50/220-240			3~/50/380-415		
Current - 50Hz	Maximum fuse amps (MFA)			A	32			16		

(1) Actual number of units depends on the indoor unit type and the connection ratio restriction for the system (being 50% <= 130%)

The most comfortable cassette just got better

New round flow cassette

ROUND FLOW

› **Bigger louvers** and **new sensor logic** further improves equal air distribution in the room

› **Widest ever choice in panels** for cassette units, with up to 8 different panels

Black auto cleaning panel

Black designer panel

Full white standard panel

White designer panel

› Comes with the known benefits: **360° air flow discharge and intelligent sensors**

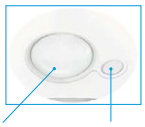

› **Auto cleaning** panels available in black and white

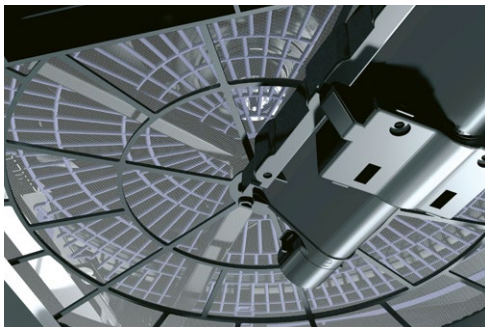

Auto cleaning filter

Dust can simply be removed using a vacuum cleaner without opening the unit.

* Available as an option

Round flow cassette

360° air discharge for optimum efficiency and comfort

- Optimised design for R-32 refrigerant
- Optional automatic filter cleaning results in higher efficiency & comfort and lower maintenance costs.
- Two optional intelligent sensors improve energy efficiency and comfort
- Widest choice ever in decoration panels: Designer, standard and autocleaning panels in white (RAL9010) and black (RAL9005)
- Bigger louvers and unique swing pattern improve equal air distribution
- Individual louver control: flexibility to suit every room layout without changing the location of the unit!
- Lowest installation height in the market: 214mm for class 20-63
- Optional fresh air intake
- Branch duct discharge allows to optimize air distribution in irregular shaped rooms or to supply air to small adjacent rooms

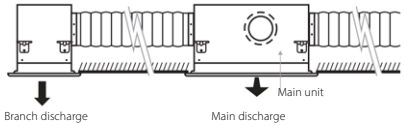

- Standard drain pump with 675mm lift increases flexibility and installation speed

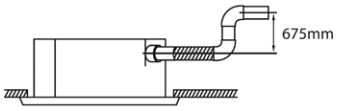

White panel | White auto cleaning panel | Black panel | Black design panel

Access all technical information on FXFA-A at my.daikin.eu or click here

Indoor unit			FXFA	20A	25A	32A	40A	50A	63A	80A	100A	125A
Cooling capacity	Total capacity	at high fan speed	kW	2.20	2.80	3.60	4.50	5.60	7.10	9.00	11.20	14.00
Heating capacity	Total capacity	at high fan speed	kW	2.50	3.20	4.00	5.00	6.30	8.00	10.00	12.50	16.00
Power input - 50Hz	Cooling	at high fan speed	kW	0.04				0.05	0.06	0.09	0.12	0.19
	Heating	at high fan speed	kW	0.04				0.05	0.06	0.09	0.12	0.19
Dimensions	Unit	HeightxWidthxDepth	mm	204x840x840						246x840x840		288x840x840
Weight	Unit		kg	18			19	21		24		26
Casing	Material			Galvanised steel plate								
Decoration panel	Model			Standard panels: BYCQ140E - white with grey louvers / BYCQ140EW - full white / BYCQ140EB - black Auto cleaning panels BYCQ140EGF - white / BYCQ140EGFB - black Designer panels: BYCQ140EP - white / BYCQ140EPB - black								
	Dimensions	HeightxWidthxDepth	mm	Standard panels: 65x950x950 / Auto cleaning panels: 148x950x950 / Designer panels: 106x950x950								
	Weight		kg	Standard panels: 5.5 / Auto cleaning panels: 10.3 / Designer panels: 6.5								
Fan	Air flow rate - 50Hz	Cooling At high fan speed	m^3/min	12.8			14.8	15.1	16.6	23.3	28.8	33.0
		Heating At high fan speed	m^3/min	12.8			14.8	15.1	16.6	23.3	28.8	33.0
Air filter	Type			Resin net								
Sound power level	Cooling	At high fan speed	dBA	49 (4)			51 (4)		53 (4)	55 (4)	60 (4)	61 (4)
Sound pressure level	Cooling	L/ML/M/MH/H	dBA	31/30/29/29.5/28 (4)			33/32/31/30/29 (4)		35/34/33/32/30 (4)	38/36/34/32/30 (4)	43/41/37/34/30 (4)	45/43/41/39/36 (4)
	Heating	L/ML/M/MH/H	dBA	31/30/29/29.5/28 (4)			33/32/31/30/29 (4)		35/34/33/32/30 (4)	38/36/34/32/30 (4)	43/41/37/34/30 (4)	45/43/41/39/36 (4)
Refrigerant	Type/GWP			R-32 / 675								
Piping connections	Liquid	OD	mm	6.35							9.52	
	Gas	OD	mm	9.52			12.7				15.9	
	Drain			VP25 (O.D. 32 / I.D. 25)								
Power supply	Phase/Frequency/Voltage		Hz/V	1~/50/60/220-240/220								
Current - 50Hz	Maximum fuse amps (MFA) (1)		A	6								
Control systems	Infrared remote control			BRC7FA532F (2)								
	Wired remote control			BRC1H52W/S/K								

(1) MFA is used to select the circuit breaker and the ground fault circuit interrupter (earth leakage circuit breaker). For more detailed information on each combination, please refer to the electrical data drawing
(2) Must be combined with Madoka wired remote controller.
(3) L/ML/M/MH/H are the different fan speeds availble. L= low; ML= medium low; M= medium; MH= medium high; H= high
(4) Sound of designer panel: +3dB

Fully flat cassette

Unique design in the market that integrates fully flat into the ceiling

- Optimised design for R-32 refrigerant
- Fully flat integration in standard architectural ceiling tiles, leaving only 8mm
- Remarkable blend of iconic design and engineering excellence with an elegant finish in white or a combination of silver and white
- Two optional intelligent sensors improve energy efficiency and comfort
- 15 class unit especially developed for small or well-insulated rooms, such as hotel bedrooms, small offices, etc.
- Individual louver control: flexibility to suit every room layout without changing the location of the unit!

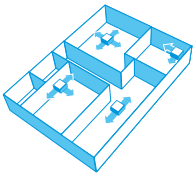

- Optional fresh air intake
- Standard drain pump with 630mm lift increases flexibility and installation speed

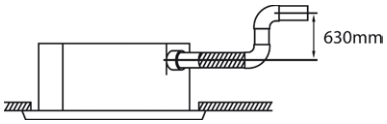

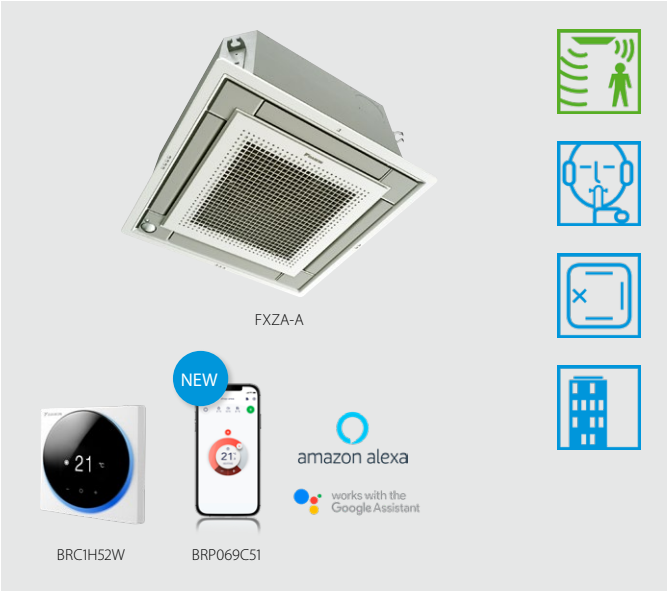

Access all technical information on FXZA-A at my.daikin.eu or click here

Indoor unit			FXZA	15A	20A	25A	32A	40A	50A
Cooling capacity	Total capacity	At high fan speed	kW	1.70	2.20	2.80	3.60	4.50	5.60
Heating capacity	Total capacity	At high fan speed	kW	1.90	2.50	3.20	4.00	5.00	6.30
Power input - 50Hz	Cooling	At high fan speed	kW	0.043			0.045	0.059	0.092
	Heating	At high fan speed	kW	0.043			0.045	0.059	0.092
Dimensions	Unit	HeightxWidthxDepth	mm	260x575x575					
Weight	Unit		kg	15.5			16.5		18.5
Casing	Material			Galvanised steel plate					
Decoration panel	Model			BYFQ60C2W1W					
	Colour			White (N9.5)					
	Dimensions	HeightxWidthxDepth	mm	46x620x620					
	Weight		kg	2.8					
Decoration panel 2	Model			BYFQ60C2W1S					
	Colour			SILVER					
	Dimensions	HeightxWidthxDepth	mm	46x620x620					
	Weight		kg	2.8					
Decoration panel 3	Model			BYFQ60B2W1					
	Colour			White (RAL9010)					
	Dimensions	HeightxWidthxDepth	mm	55x700x700					
	Weight		kg	2.7					
Decoration panel 4	Model			BYFQ60B3W1					
	Colour			WHITE (RAL9010)					
	Dimensions	HeightxWidthxDepth	mm	55x700x700					
	Weight		kg	2.7					
Fan	Air flow rate - 50Hz	Cooling At high fan speed	m^3/min	8.5	8.7	9.0	10.0	11.5	14.0
		Heating At high fan speed	m^3/min	8.5	8.7	9.0	10.0	11.5	14.0
Air filter	Type			Resin net					
Sound power level	Cooling	At high fan speed	dBA	49		50	51	54	60
Sound pressure level	Cooling	Low/medium/high fan speed	dBA	25.5/28.0/31.5	25.5/29.5/32.0	25.5/30.0/33.0	26.0/30.0/33.5	28.0/32.0/37.0	33.0/40.0/43.0
	Heating	Low/medium/high fan speed	dBA	25.5/28.0/31.5	25.5/29.5/32.0	25.5/30.0/33.0	26.0/30.0/33.5	28.0/32.0/37.0	33.0/40.0/43.0
Refrigerant	Type/GWP			R-32 / 675					
Piping connections	Liquid	OD	mm	6.35					
	Gas	OD	mm	9.52				12.7	
	Drain			VP20 (I.D. 20/O.D. 26)					
Power supply	Phase/Frequency/Voltage		Hz/V	1~/50/60/220-240/220					
Current - 50Hz	Maximum fuse amps (MFA)		A	6					
Control systems	Infrared remote control			BRC7EB530W (standard panel) / BRC7F530W (white panel) / BRC7F530S (grey panel) (1)					
	Wired remote control			BRC1H52W/S/K					

Dimensions do not include control box
(1) Must be combined with Madoka wired remote controller.

Auto cleaning filter for concealed ceiling units

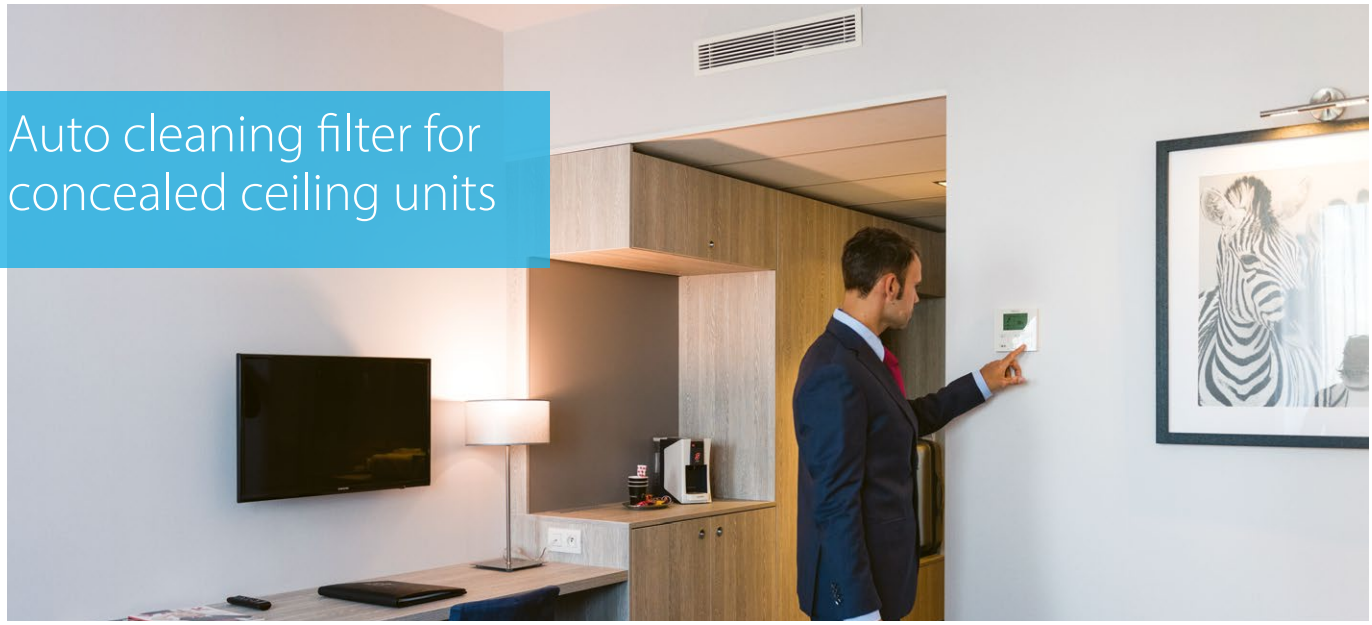

The unique automatic cleaning filter achieves higher efficiency and comfort with lower maintenance costs

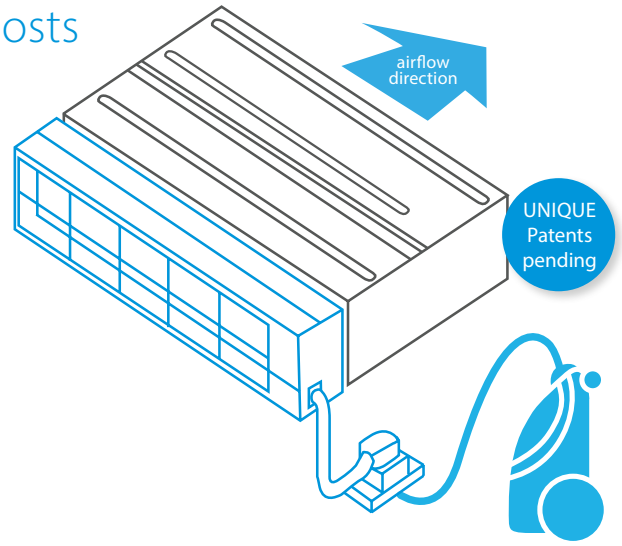

Reduce running costs

› Automatic filter cleaning ensures low maintenance costs because the filter is always clean

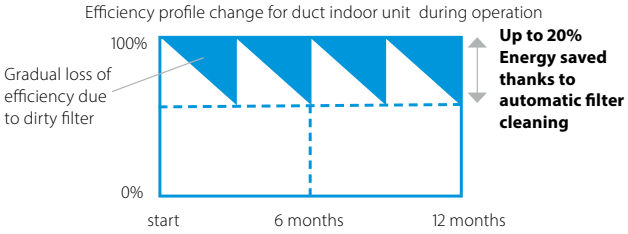

Minimal time required for filter cleaning

› The dust box can be emptied with a vacuum cleaner for fast and easy cleaning
› No more dirty ceilings

Improved indoor air quality

› Optimum airflow eliminates draft and insulates sound

Superb reliability

› Prevents clogged filters for seamless operation

Unique technology

› Unique and innovative filter technology inspired by the Daikin auto cleaning cassette

How does it work?

1. **Scheduled automatic filter cleaning**
2. **Dust collects in a dust box that's integrated into the unit**
3. **The dust can easily be removed with a vacuum cleaner**

YouTube

www.youtube.com/DaikinEurope

Combination table

	Split / Sky Air				VRV						
	FDXM-F9				FXDA-A/FXDQ-A3						
	25	35	50	60	15	20	25	32	40	50	63
BAE20A62	•	•			•	•	•	•			
BAE20A82									•	•	
BAE20A102			•	•							•

Specifications

	BAE20A62	BAE20A82	BAE20A102
Heigth (mm)	210		
Width (mm)	830	1,030	1,230
Depth (mm)	188		

NEW FXDA-A

BLUEVOLUTION

Slim concealed ceiling unit

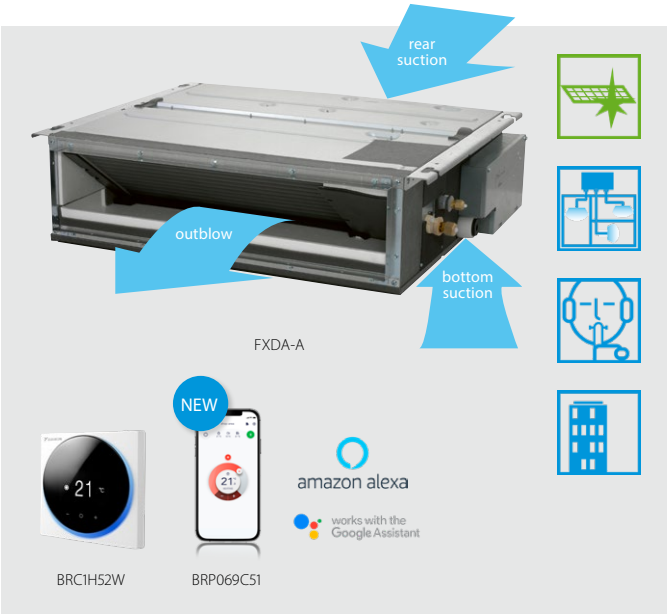

Slim design for flexible installation

- Optimised design for R-32 refrigerant
- 10 class unit especially developed for small or well-insulated rooms, such as hotel bedrooms, small offices, etc.
- Compact dimensions, can easily be mounted in a ceiling void of only 240mm

SERIE A (15, 20, 25, 32)

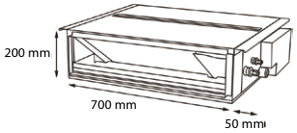

- Medium external static pressure up to 44Pa facilitates unit use with flexible ducts of varying lengths
- Discretely concealed in the wall: only the suction and discharge grilles are visible
- Optional auto cleaning filter option ensures maximum efficiency, comfort and reliability by regular filter cleaning
- Flexible installation, as the air suction direction can be altered from rear to bottom suction

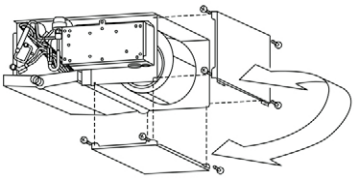

- Standard drain pump with 600mm lift increases flexibility and installation speed

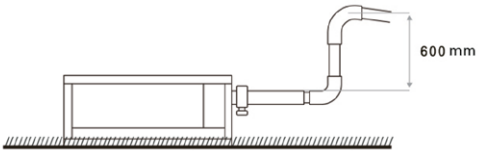

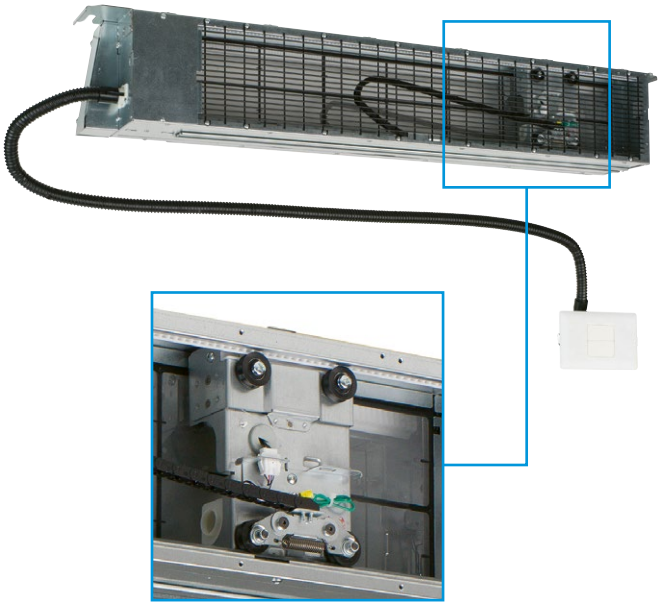

Auto cleaning filter option

Access all technical information on FXDA-A at my.daikin.eu or click here

Access all technical information on BAE20A at my.daikin.eu or click here

NEW

Indoor unit			FXDA	10A	15A	20A	25A	32A	40A	50A	63A
Cooling capacity	Total capacity	At high fan speed	kW	1.10	1.70	2.20	2.80	3.60	4.50	5.60	7.10
Heating capacity	Total capacity	At high fan speed	kW	1.30	1.90	2.50	3.20	4.00	5.00	6.30	8.00
Power input - 50Hz	Cooling	At high fan speed	kW	0.042	0.057	0.068			0.075	0.096	0.107
	Heating	At high fan speed	kW	0.042	0.057	0.068			0.075	0.096	0.107
Required ceiling void >			mm	240							
Dimensions	Unit	HeightxWidthxDepth	mm	200x750x620					200x950x620		200x1,150x620
Weight	Unit		kg	22.0					26.0		29.0
Casing	Material			Galvanised steel							
Fan	Air flow rate - 50Hz	Cooling At high fan speed	m^3/min	5.2	6.5	8.0			10.5	12.5	16.5
	External static pressure - 50Hz	Factory set/High	Pa	10/30.0					15/44.0		
Air filter	Type			Removable / washable							
Sound power level	Cooling	At high fan speed	dBA	48	50	51			52	53	54
Sound pressure level	Cooling	Low/Medium/High fan speed	dBA	26 / 28 / 29	27.0/31.0/32.0	27.0/31.0/33.0			28.0/32.0/34.0	29.0/33.0/35.0	30.0/34.0/36.0
Refrigerant	Type/GWP			R-32 / 675							
Piping connections	Liquid	OD	mm	6.35							
	Gas	OD	mm	9.52					12.7		
	Drain			VP20 (I.D. 20/O.D. 26)							
Power supply	Phase/Frequency/Voltage		Hz/V	1~/50/60/220-240/220							
Current - 50Hz	Maximum fuse amps (MFA)		A	6							
Control systems	Infrared remote control			BRC4C65 / BRC4C66 (1)							
	Wired remote control			BRC1H52W/S/K							

(1) Must be combined with Madoka wired remote controller.

Concealed ceiling unit with medium ESP

Slimmest yet most powerful medium static pressure unit on the market

› Optimised design for R-32 refrigerant
› Slimmest unit in class, only 245mm (300mm built-in height) and therefore narrow ceiling voids are no longer a challenge

› Quiet operation: down to 25dBA sound pressure level
› Medium external static pressure up to 150Pa facilitates using flexible ducts of varying lengths
› Possibility to change ESP via wired remote control allows optimisation of the supply air volume
› Discretely concealed in the wall: only the suction and discharge grilles are visible
› 15 class unit especially developed for small or well-insulated rooms, such as hotel bedrooms, small offices, etc.
› Optional fresh air intake
› Flexible installation: air suction direction can be altered from rear to bottom suction and choice between free use or connection to optional suction grilles

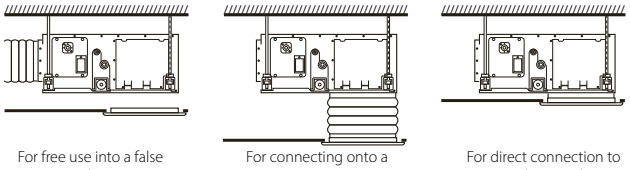

For free use into a false ceiling

For connecting onto a suction canvas (not supplied by Daikin)

For direct connection to Daikin panel (via EKBYBSD kit)

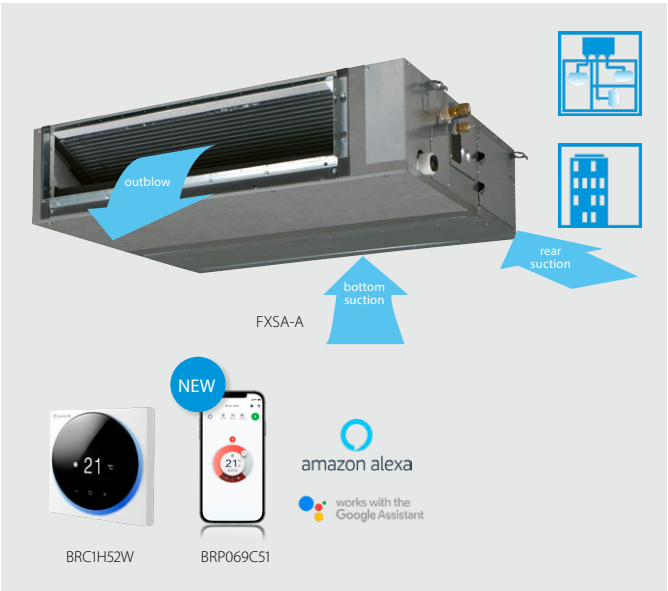

› Standard built-in drain pump with 625mm lift increases flexibility and installation speed

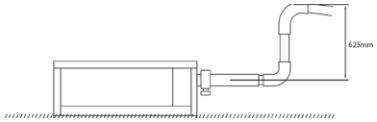

Automatic Airflow Adjustment function

Automatically selects the most appropriate fan curve to achieve the units' nominal air flow within ±10%

Why?

After installation the real ducting will frequently differ from the initially calculated air flow resistance ✳ the real air flow may be much lower or higher than nominal , leading to a lack of capacity or uncomfortable air temperature
Automatic Airflow Adjustment function will adapt the unit's fan speed to any ducting automatically (10 or more fan curves are available on every model), making installation much faster

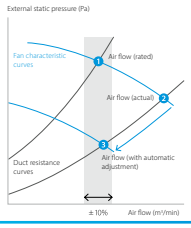

Access all technical information on FXSA-A at my.daikin.eu or click here

Indoor unit			FXSA	15A	20A	25A	32A	40A	50A	63A	80A	100A	125A	140A
Cooling capacity	Total capacity	At high fan speed	kW	1.70	2.20	2.80	3.60	4.50	5.60	7.10	9.00	11.20	14.00	16.00
Heating capacity	Total capacity	At high fan speed	kW	1.90	2.50	3.20	4.00	5.00	6.30	8.00	10.0	12.5	16.0	18.0
Power input - 50Hz	Cooling	At high fan speed	kW	0.086				0.147	0.150	0.183	0.209	0.285	0.326	0.382
	Heating	At high fan speed	kW	0.086				0.147	0.150	0.183	0.209	0.285	0.326	0.382
Dimensions	Unit	HeightxWidthxDepth	mm	245x550x800				245x700x800		245x1,000x800		245x1,400x800		245x1,550x800
Weight	Unit		kg	23.5			24.0	28.5	29.0	35.5	36.5	46.0	47.0	51.0
Casing	Material			Galvanised steel plate										
Fan	Air flow rate - 50Hz	Cooling At high fan speed	m^3/min	8.7	9.0		9.5	15.0	15.2	21.0	23.0	32.0	36.0	39.0
		Heating At high fan speed	m^3/min	8.7	9.0		9.5	15.0	15.2	21.0	23.0	32.0	36.0	39.0
	External static pressure - 50Hz	Factory set/High	Pa	30/150							40/150		50/150	
Air filter	Type			Resin net										
Sound power level	Cooling	At high fan speed	dBA	54			55	60		59	61		64	
Sound pressure level	Cooling	Low/Medium./High	dBA	25.0/28.0/29.5	25.0/28.0/30.0		26.0/29.0/31.0	29.0/32.0/35.0		27.0/30.0/33.0	29.0/32.0/35.0	31.0/34.0/36.0	33.0/36.0/39.0	34.0/38.0/41.5
	Heating	Low/Medium/High	dBA	26.0/29.0/31.5	26.0/29.0/32.0		27.0/30.0/33.0	29.0/34.0/37.0		28.0/32.0/35.0	30.0/34.0/37.0	31.0/34.0/37.0	33.0/37.0/40.0	34.0/38.5/42.0
Refrigerant	Type/GWP			R-32 / 675										
Piping connections	Liquid	OD	mm	6.35									9.52	
	Gas	OD	mm	9.52				12.7					15.9	
	Drain			VP20 (I.D. 20/O.D. 26), drain height 625 mm										
Power supply	Phase/Frequency/Voltage		Hz/V	1~/50/60/220-240/220										
Current - 50Hz	Maximum fuse amps (MFA)		A	6										
Control systems	Infrared remote control			BRC4C65 (1)										
	Wired remote control			BRC1H52W/S/K										

(1) Must be combined with Madoka wired remote controller.

Wall mounted unit

For rooms with no false ceilings nor free floor space

- Optimised design for R-32 refrigerant
- Flat, stylish front panel blends easily within any interior décor and is easier to clean
- Can easily be installed in both new and refurbishment projects
- The air is comfortably spread up- and downwards thanks to 5 different discharge angles that can be programmed via the remote control
- Maintenance operations can be performed easily from the front of the unit

Access all technical information on FXAA-A at my.daikin.eu or click here

Indoor unit			FXAQ	15A	20A	25A	32A	40A	50A	63A
Cooling capacity	Total capacity	At high fan speed	kW	1.7	2.2	2.8	3.6	4.5	5.6	7.1
Heating capacity	Total capacity	At high fan speed	kW	1.9	2.5	3.2	4.0	5.0	6.3	8.0
Power input - 50Hz	Cooling	At high fan speed	kW	0.02		0.03		0.02	0.03	0.05
	Heating	At high fan speed	kW	0.03			0.04	0.02	0.04	0.06
Dimensions	Unit	HeightxWidthxDepth	mm	290x795x266				290x1,050x269		
Weight	Unit		kg	12				15		
Fan	Air flow rate - 50Hz	Cooling Low/High fan speed	m^3/min	7.0/8.4	7.0/9.1	7.0/9.4	7.0/9.8	9.7/12.2	11.5/14.4	13.5/18.3
Air filter	Type			Washable resin net						
Sound power level	Cooling	At high fan speed	dBA	51.0	52.0	53.0	55.0		58.0	63.0
Sound pressure level	Cooling	Low/High fan speed	dBA	28.5/32.0	28.5/33.0	28.5/35.0	28.5/37.5	33.5/37.0	35.5/41.0	38.5/46.5
	Heating	Low/High fan speed	dBA	28.5/33.0	28.5/34.0	28.5/36.0	28.5/38.5	33.5/38.0	35.5/42.0	38.5/47.0
Refrigerant	Type/GWP			R-32 / 675						
Piping connections	Liquid	OD	mm	6.35						
	Gas	OD	mm	9.52				12.7		
	Drain			VP13 (I.D. 15/O.D. 18)						
Power supply	Phase/Frequency/Voltage		Hz/V	1~/50/220-240						
Current - 50Hz	Maximum fuse amps (MFA)		A	6						
Control systems	Infrared remote control			BRC7EA628 / BRC7EA629 (1)						
	Wired remote control			BRC1H52W/S/K						

(1) Must be combined with Madoka wired remote controller.

*Note: blue cells contain preliminary data

VRV 5 outdoor unit overview

Capacity class (kW)

	Model		Product name			4	5	6
Air – cooled heat pump	UNIQUE VRV 5 S-series	Lower CO2 equivalent and market-leading flexibility › Compact single fan design saves space and is easy to install › Market-leading serviceability and handling › Reduced CO2 equivalent thanks to the use of lower GWP R-32 refrigerant and lower refrigerant charge › Offering like-for-like R-410A flexibility	RXYSA-AV1 / AY1	1~	●	●	●
				3~	●	●	●

With new Madoka BRC1H52W/S/K!

VRV 5 indoor unit overview

Capacity class (kW)

Type	Model		Product name	10	15	20	25	32	40	50	63	71	80	100	125	140
Ceiling mounted cassette	UNIQUE Round flow cassette	360° air discharge for optimum efficiency and comfort › Auto cleaning function ensures high efficiency › Intelligent sensors save energy and maximize comfort › Flexibility to suit every room layout › Lowest installation height in the market! › Widest choice ever in decoration panel designs and colors	FXFA-A			●	●	●	●	●	●		●	●	●	
	UNIQUE Fully flat cassette	Unique design that integrates fully flat into the ceiling › Perfect integration in standard architectural ceiling tiles › Blend of iconic design and engineering excellence › Intelligent sensors save energy and maximize comfort › Small capacity unit developed for small or well-insulated rooms › Flexibility to suit every room layout	FXZA-A		●	●	●	●	●	●						
Concealed ceiling	Slim concealed ceiling unit	Slim design for flexible installation › Compact dimensions enable installation in narrow ceiling voids › Medium external static pressure up to 44Pa › Only grilles are visible › Small capacity unit developed for small of well-insulated rooms › Reduced energy consumption thanks to DC fan motor	FXDA-A (UNIQUE FOR R-32)	●	●	●	●	●	●	●	●					
	Concealed ceiling unit with medium ESP	Slimmest yet most powerfull medium static pressure unit on the market! › Slimmest unit in class, only 245mm › Low operating sound level › Medium external static pressure up to 150Pa facilitates using flexible ducts of varying lengths › Automatic air flow adjustment function measures the air volume and static pressure and adjusts it towards the nominal air flow, guaranteeing comfort	FXSA-A		●	●	●	●	●	●	●		●	●	●	●
Wall mounted	Wall mounted unit	For rooms with no false ceilings nor free floor space › Flat, stylish front panel is more easy to clean › Small capacity unit developed for small of well-insulated rooms › Reduced energy consumption thanks to DC fan motor › The air is comfortably spread up- and downwards thanks to 5 different discharge angles	FXAA-A		●	●	●	●	●	●	●					
Cooling capacity (kW)[1]				1.1	1.7	2.2	2.8	3.6	4.5	5.6	7.1	8.0	9.0	11.2	14.0	16.0
Heating capacity (kW)[2]				1.3	1.9	2.5	3.2	4.0	5.0	6.3	8.0	9.0	10.0	12.5	16.0	18.0

Black and designer panels

Auto cleaning filter option

(1) Nominal cooling capacities are based on: indoor temperature: 27°CDB, 19°CWB, outdoor temperature: 35°CDB, equivalent refrigerant piping: 5m, level difference: 0m

(2) Nominal heating capacities are based on: indoor temperature: 20°CDB, outdoor temperature: 7°CDB, 6°CWB, equivalent refrigerant piping: 5m, level difference: 0m

VRV 5 indoor unit benefit overview

			Ceiling mounted cassette units		Concealed ceiling units		Wall mounted unit
			FXFA-A	FXZA-A	FXDA-A	FXSA-A	FXAA-A
We care	Home leave operation	During absence, indoor comfort levels can be maintained	●	●	●	●	●
	Fan only	The air conditioner can be used as fan, blowing air without cooling or heating	●	●	●	●	●
	Auto cleaning filter	The filter automatically cleans itself. Simplicity of upkeep means optimum energy efficiency and maximum comfort without the need for expensive or time-consuming maintenance	● (optional)		● (optional)		
	Floor and presence sensor	The presence sensor directs the air away from any person detected in the room. The floor sensor detects the average floor temperature and ensures an even temperature distribution between ceiling and floor	●	●			
Comfort	Draught prevention	When starting to warm up or when the thermostat is off, the air discharge direction is set horizontally and the fan to low speed, to prevent draught. After warming up, air discharge and fan speed are set as desired	●	●			
	Whisper quiet	Daikin indoor units are whisper quiet. Also the outdoor units are guaranteed not to disturb the quiet of the neightbourhood	●	●	●	●	
	Auto cooling-heating changeover	Automatically selects cooling or heating mode to achieve the set temperature	●	●	●	●	●
Air treatment	Air filter	Removes airborne dust particles to ensure a steady supply of clean air	G1	G1	●	G1	●
Humidity control	Dry programme	Allows humidity levels to be reduced without variations in room temperature	●	●	●	●	●
Air flow	Ceiling soiling prevention	The air discharge of the indoor unit is specially designed to prevent air being blown against the ceiling to prevent ceiling stains	●	●			
	Vertical auto swing	Possibility to select automatic vertical moving of the air discharge louvre, for uniform air flow and temperature distribution	●	●			●
	Fan speed steps	Multiple fan speeds to select,to optimize comfort levels	5 + auto	3 + auto	3	3 + auto	2
	Individual louver control	Individual louver control via the wired remote controller makes it simple to fix the position of each louver individually, to suit any new room configuration. Optional closure kits are available as well	●	●			
Remote control & timer	Online Controller (BRP069C51) NEW	Can control and monitor the status of your Daikin heating or air conditioning system	●	●	●	●	●
	Weekly timer	Timer can be set to start and stop operation anytime on a daily or weekly basis	●	●	●	●	●
	Infrared remote control	Infrared remote control with LCD to remotely control your indoor unit	● (1)	● (1)	● (1)	● (1)	● (1)
	Wired remote control	Wired remote control to remotely control your indoor unit	Only connectable to new BRC1H52W/S/K				●
	Centralised control	Centralised control to to control several indoor units from one single point	●	●	●	●	●
Other funtcions	Auto-restart	The unit restarts automatically at the original settings after power failure	●	●	●	●	●
	Self-diagnosis	Simplifies maintenance by indicating system faults or operating anomalies	●	●	●	●	●
	Drain pump kit	Facilitates condensation draining from the indoor unit	Standard	Standard	Standard	Standard	Optional
	Multi tenant	The indoor unit's main power supply can be turned off when leaving the building or for servicing purposes	●	●	●	●	●

(1) Must be combined with Madoka wired remote controller

Did you know …

different standards regarding F-gas safety regulations exist?

Why are different standards applied?

Two different standards exist to cover the safety regulations for R-32:
› A general standard on refrigerants: EN378:2016
› A specific product standard for heat pumps: IEC60335-2-40 (Ed.6)

EN378:2016 states that if a specific product standard tackles the topic, it prevails over the generic standard.
Therefore flammability is covered by IEC60335-2-40 (Ed.6).

WHICH STANDARD IS APPLIED?

Toxicity (Indicated by the capital letter A or B)	Flammability (Indicated by the digits 1, 2, 3)
Generic Standard - EN378:2016	Product Standard IEC60335-2-40 (Ed.6)

As a result of the combined standard the refrigerant classification is:

		Toxicity	
		Lower	Higher
Flammability	No flame Propagation	A1	B1
	Lower flammability	A2L* R-32	B2L*
		A2	B2
	Higher flammability	A3	B3

*A2L and B2L are lower flammability regfrigerants with a maximum burning velocity of ≤10 cm/s

Overview of room area limitation by EN378:2016 and IEC60335-2-40 (Ed.6)

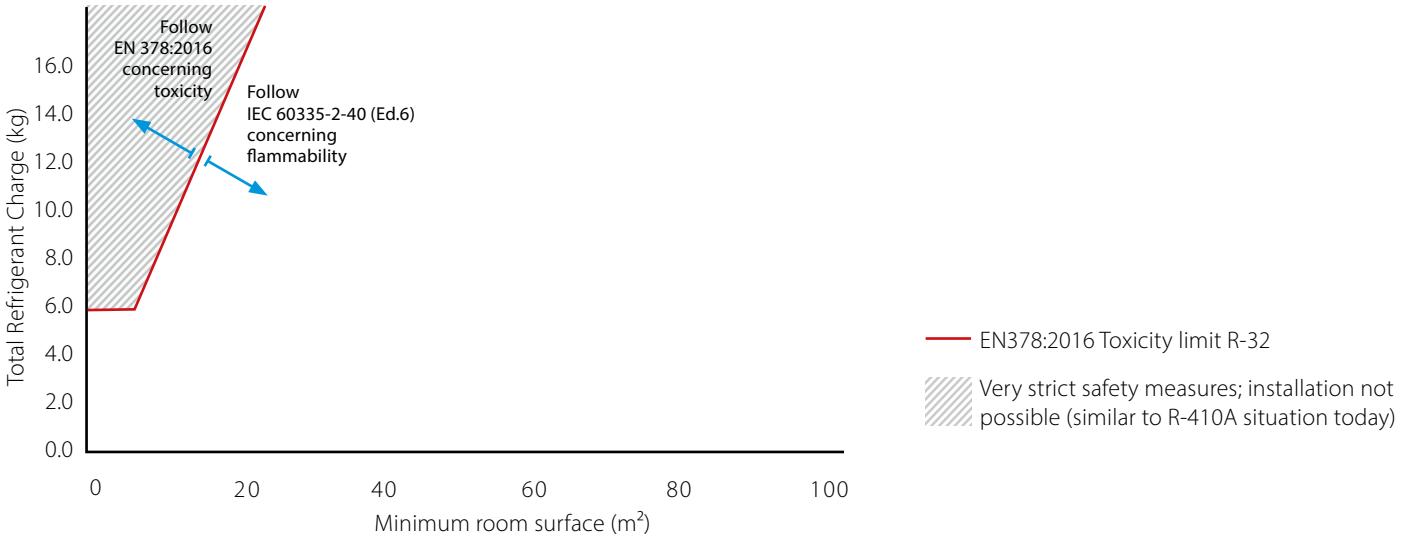

What to take into account

in terms of additional measures for R-32?

Toxicity

› Although both R-410A and R-32 are classified as 'A' in EN378:2016 the toxicity limit is slightly different: 0.30 kg/m³ for R-32 vs 0,44kg/m³ for R-410A.
› On the other hand the refrigerant charge for R-32 is lower **resulting in only a small change of room area limitation**

Flammablity

› The product standard IEC60335-2-40 (Ed.6) specifies all information regarding the total refrigerant amount and minimum room surface, depending on the additional measures taken.
› **Area 1**: Application area without any measures
- Typically split and Sky Air systems fall in this area thanks to very low refrigerant charges.
- A typical mini VRV installation, with 6.5kgs of refrigerant would require a minimum room surface of 39m² (1)

› **Area 2** :Extended application area of VRV 5 including 2 factory-mounted measures.
- The Daikin way, enabling to **use the VRV system to it's full potential**, with a minimum room surface down to **10.0m²** (1)

(1) for indoor units installed at minimum 1.8m height and above the lowest underground floor.

THIRD PARTY APPROVED

Overview of application surface in function of applied measures under IEC60335-2-40 (Ed.6) , considering units are installed at minimum 1.8m height and above the lowest underground floor.

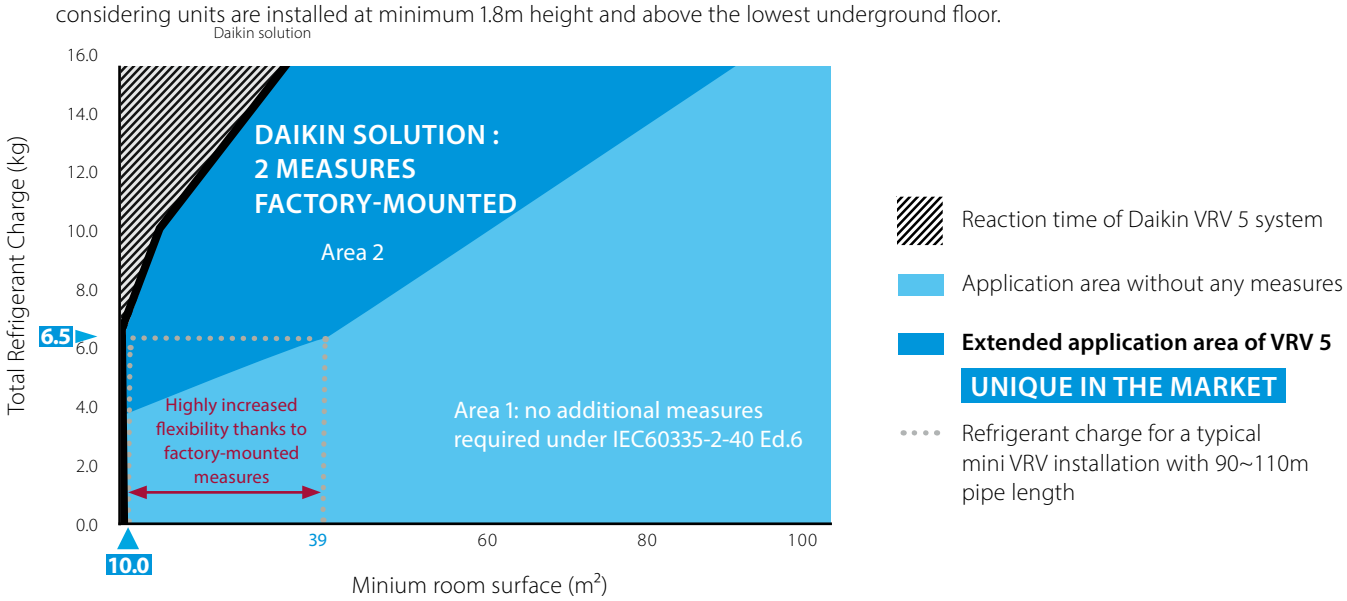

The representation above is Daikin's interpretation of IEC60335-2-40 (Ed.6) and has no intention to replace in anyway existing legislation.

Possible measures towards flammability

› Manufacturers have the choice to implement zero, one or two measures
› 3 types of measures are allowed:
- Ventilation (natural or mechanical)
- **Shut-off valves**
- **Alarm (local and maybe central)**

] **DAIKIN SOLUTION, UNIQUE IN THE MARKET**

The most flexible solution by Daikin

› The most flexible solution: two measures, system integrated
- No additional costs or calculations needed to implement measures in the field
- No hassle or additional time needed when installing
- No risk in errors thanks to Xpress selection software

› Third party tested and approved

Technical drawings

Outdoor units

RXYSA-AV1/AY1	21
FXFA-A	25
FXZA-A	27
FXDA-A	28
FXSA-A	30
FXAA-A	33

RXYSA-AV1/AY1

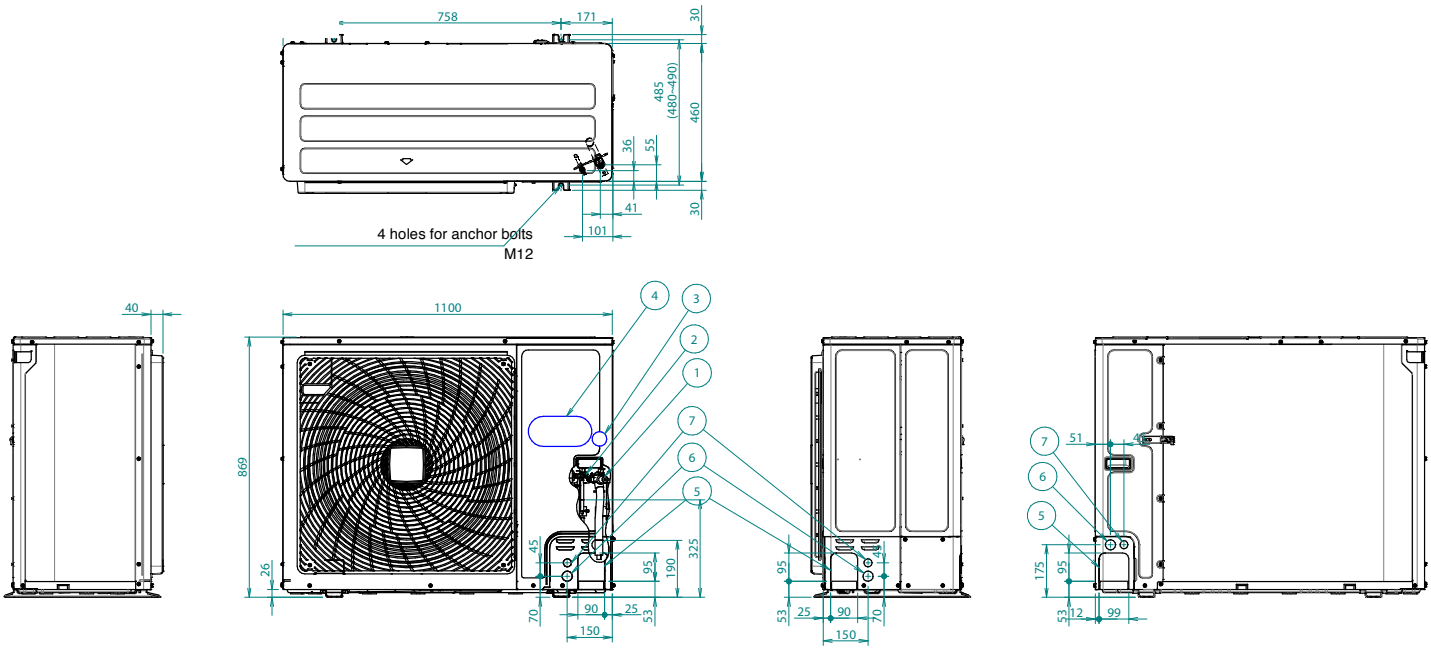

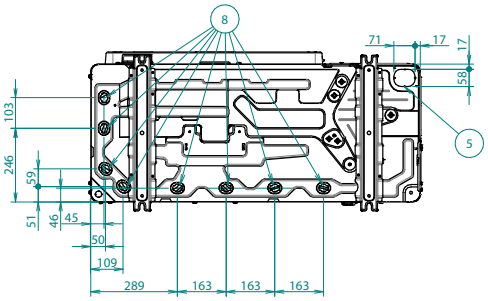

1. Gas pipe connection ·Ø22.2· brazing
2. Liquid pipe connection ·Ø9.5· brazing
3. Service port (in the unit)
4. Electronic connection and grounding terminal ·M5· (in the switch box)
5. Refrigerant piping intake
6. Knockout hole.
7. Knockout hole.
8. Drain outlet

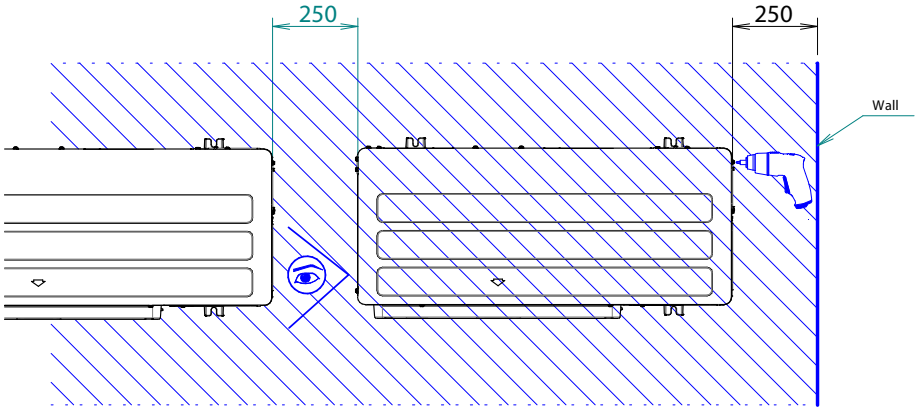

* For optimal serviceability, provide ≥·250·mm of free space.
For more installation and service space guidelines, see drawing ·3D069554·.

Single unit (■) | Single row of units (■■■)

Suction side

In the illustration below, the service space at the suction side is based on 35°C DB and cooling operation. Foresee more space in the following cases:

- When the suction side temperature regularly exceeds this temperature.
- When the heat load of the outdoor units is expected to regularly exceed the maximum operating capacity.

Discharge side

Take refrigerant piping work into account when positioning the units. If your lay out does not match with any of the layouts below, contact your dealer.

Single unit (■) |Single row of units (■■■)

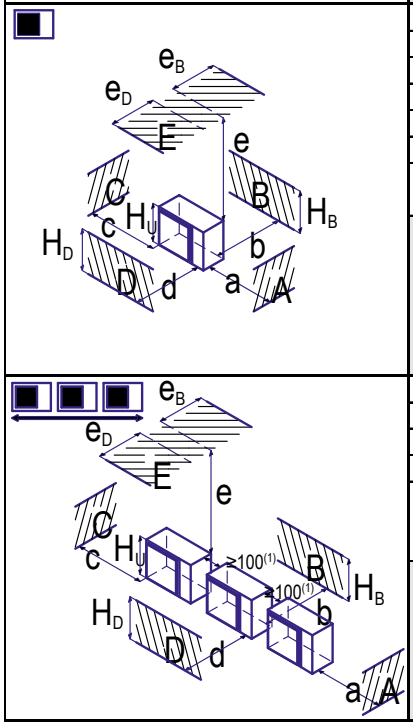

	A~E	Hb Hd Hu		(mm) a	b	c	d	e	e_B	e_D	
■	B	-			≥ 100						
	A,B,C	-		≥ 100(1)	≥ 100	≥ 100					
	B,E	-			≥ 100			≥ 1000		≤500	
	A,B,C,E	-		≥ 150(1)	≥ 150	≥ 150		≥ 1000		≤500	
	D	-					≥ 500				
	D,E	-					≥ 500	≥ 1000	≤500		
	B,D	Hd>Hu			≥ 100		≥ 500				
		Hd≤Hu			≥ 100		≥ 500				
	B,D,E	Hd>Hu	Hb≤½Hu		≥ 250		≥ 750	≥ 1000	≤500		1
			½Hu>Hb≤Hu		≥ 250		≥ 1000	≥ 1000	≤500		
			Hb>Hu	⊘							
		Hd≤Hu	Hd≤½Hu		≥ 100		≥ 1000	≥ 1000		≤500	
			½Hu<Hd≤Hu		≥ 200		≥ 1000	≥ 1000		≤500	
			Hd>Hu	⊘							
■■■	A,B,C	-		≥ 200(1)	≥ 300 ≥	1000					
	A,B,C,E	-		≥ 200(1)	≥ 300	≥ 1000		≥ 1000		≤500	
	D	-					≥ 1000				
	D,E	-					≥ 1000	≥ 1000	≤500		
	B,D	Hd>Hu			≥ 300		≥ 1000				
		Hd≤Hu	Hd≤½Hu		≥ 250		≥ 1500				
			½Hu<Hd≤Hu		≥ 300		≥ 1500				
	B,D,E	Hd>Hu	Hb≤½Hu		≥ 300		≥ 1000	≥ 1000	≤500		1+2
			½Hu<Hb≤Hu		≥ 300		≥ 1250	≥ 1000	≤500		
			Hb>Hu	⊘							
		Hd≤Hu	Hd≤½Hu		≥ 250		≥ 1500	≥ 1000		≤500	
			½Hu<Hd≤Hu		≥ 300		≥ 1500	≥ 1000		≤500	
			Hd>Hu	⊘							

(1)	For better serviceability, use a distance ≥250 mm
A,B,C,D	Obstacles (walls/baffle plates)
E	Obstacle (roof)
a,b,c,d,e	Minimum service space between the unit and obstacles A, B, C, D and E
e_B	Maximum distance between the unit and the edge of obstacle E, in the direction of obstacle B
e_D	Maximum distance between the unit and the edge of obstacle E, in the direction of obstacle D
Hu	Height of the unit
Hb,Hd	Height of obstacles B and D
1	Seal the bottom of the installation frame to prevent discharged air from flowing back to the suction side through the bottom of the unit.
2	Maximum two units can be installed.
⊘	Not allowed

Multiple rows of units ( )

Multiple rows of units ( )

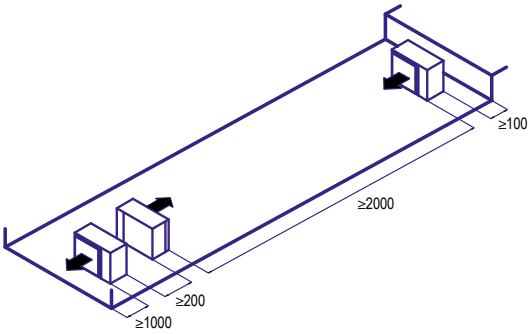

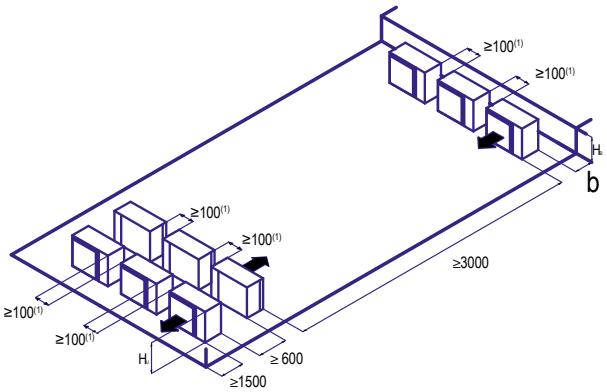

Hb Hu	b (mm)
Hb≤½Hu	b≥250
½Hu<Hb≤Hu	b≥ 300
Hb>Hu	⊘

(1) For better serviceability, use a distance ≥250 mm

⊘ Not allowed

Stacked units (max.2 levels) ( )

Stacked units (max.2 levels) ( )

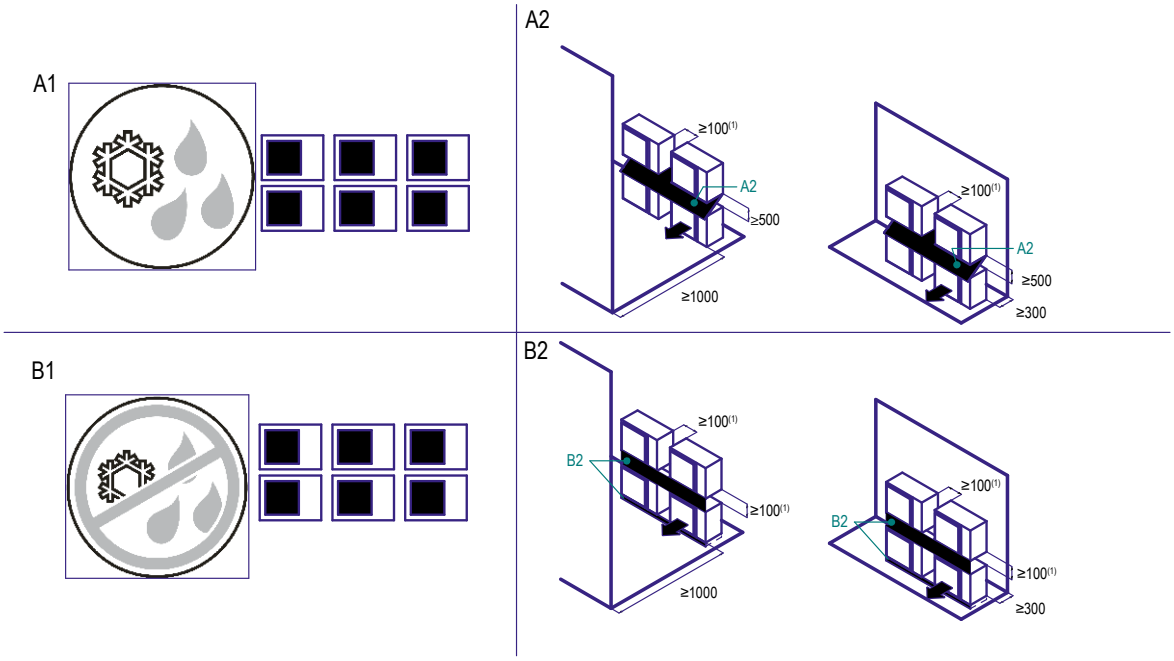

(1) For better serviceability, use a distance ≥250 mm

A1=>A2 (A1) If there is danger of drainage dripping and freezing between the upper and lower units…
(A2) Then install a roof between the upper and lower units. Install the upper unit high enough above the lower unit to prevent ice buildup at the upper unit's bottom plate.

B1=>B2 (B1) If there is no danger of drainage dripping and freezing between the upper and lower units…
(B2) Then it is not required to install a roof, but seal the gap between the upper and lower units to prevent discharged air from flowing back to the suction side through the bottom of the unit.

FXFA-A WITH STANDARD PANEL

Notes

1. Location of nameplate
   The unit nameplate is located on the control box cover.
   The decoration panel nameplate is located on the piping-side panel frame, under the corner cover.
2. When installing optional accessories, refer to their respective documentation.
3. Make sure the distance between the ceiling and the cassette does not exceed ·35·mm.
   The maximum ceiling opening is ·910·mm.
4. When the conditions in the ceiling exceed 30°C ambient temperature and 80% relative humidity, or when fresh air is inducted into the ceiling, additional insulation is required (polyethylene foam, thickness ≥·10·mm)
5. When installing a sensor kit, there will be a sensor on this location. For details, see the drawing of the sensor kit.
6. When installing a wireless controller, there will be a receiver on this location. For details, see the drawing of the wireless controller.

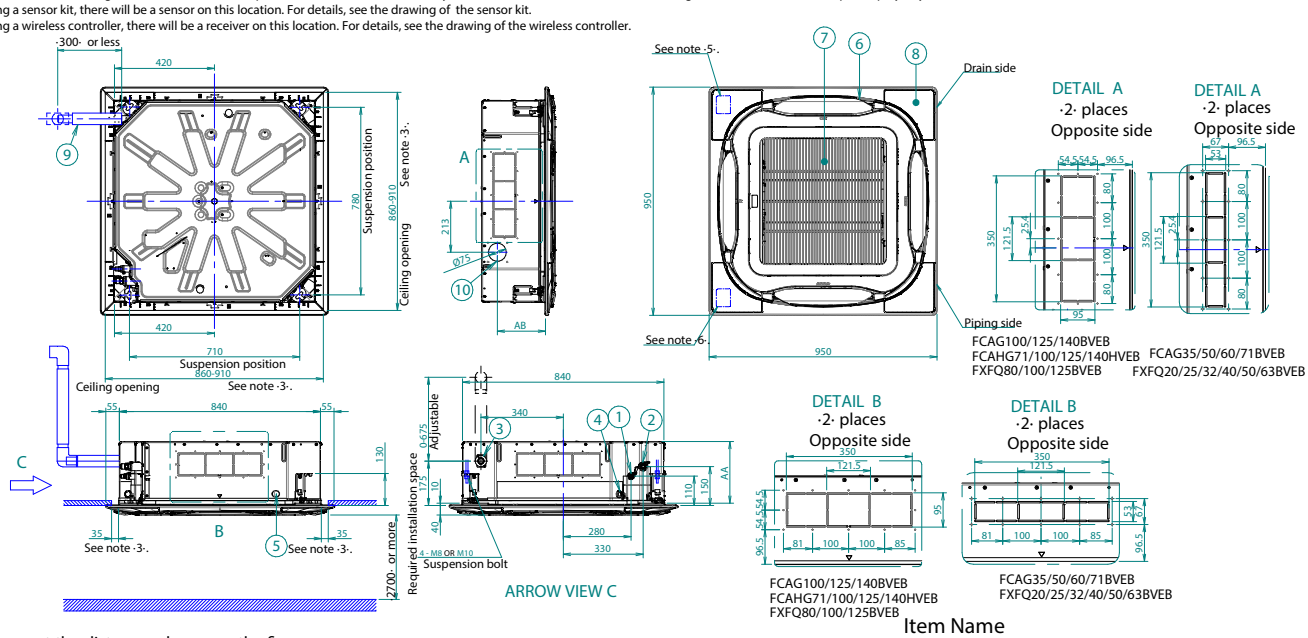

Respect the distances shown on the figure.

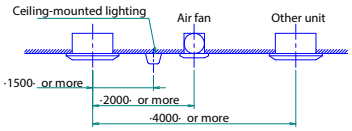

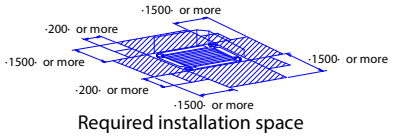

Required installation space

If a discharge outlet is closed up with the "sealin g member" option kit, then the required installation space on that (closed up) side is ·500·mm instead of ·1500·mm.

Item Name

1. Liquid pipe connection port
2. Gas pipe connection port
3. Drain pipe connection
4. Power supply wiring intake
5. Transmission wiring intake hole
6. Air discharge outlet
7. Air suction grille
8. Corner decoration cover
9. Drain hose
10. Knockout hole.

FXFA-A WITH AUTO CLEANING PANEL

Notes

1. Location of nameplate
   The unit nameplate is located on the control box cover.
   The decoration panel nameplate is located on the piping-side panel frame, under the corner cover.
2. When installing optional accessories, refer to their respective documentation.
3. Make sure the distance between the ceiling and the cassette does not exceed ·35·mm.
   The maximum ceiling opening is ·910·mm.
4. When the conditions in the ceiling exceed 30°C ambient temperature and 80% relative humidity, or when fresh air is inducted into the ceiling, additional insulation is required (polyethylene foam, thickness ≥·10·mm).
5. When installing a sensor kit, there will be a sensor on this location. For details, see the drawing of the sensor kit.

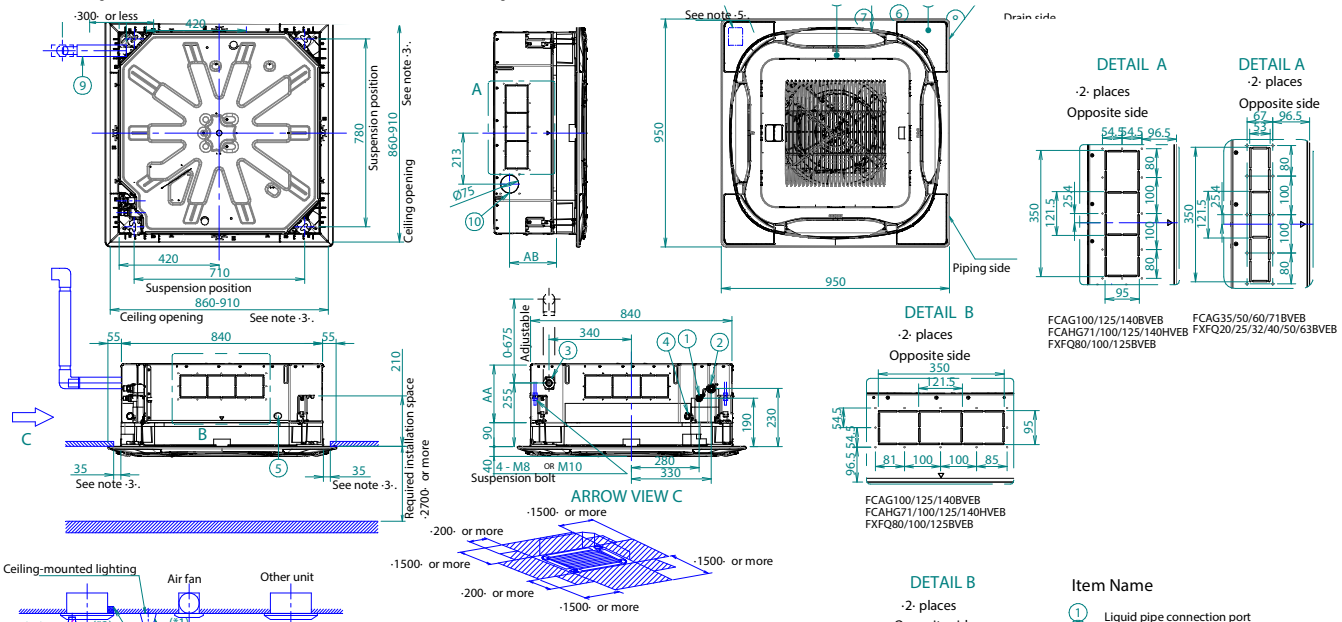

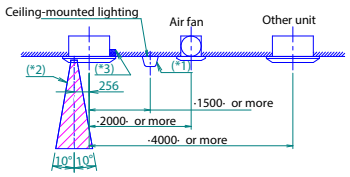

Required installation space

If a discharge outlet is closed up with the "sealing member" option kit, then the required installation space on that (closed up) side is ·500·mm instead of ·1500·mm.

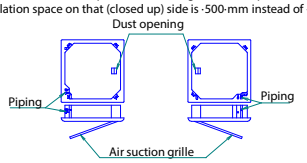

Installation direction

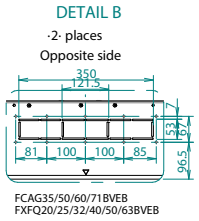

Item Name

1. Liquid pipe connection port
2. Gas pipe connection port
3. Drain pipe connection
4. Power supply wiring intake
5. Transmission wiring intake hole
6. Air discharge outlet
7. Air suction grille
8. Corner decoration cover
9. Drain hose
10. Knockout hole.

(*1)Not applicable to recessed lighting.
(*2)Required space for entering with vacuum cleaner tube.
(*3)Make sure the decoration panel discharge outlet is not blocked.

FXFA-A WITH DESIGNER PANEL

Notes

1. Location of nameplate
   The unit nameplate is located on the control box cover.
   The decoration panel nameplate is located on the piping-side panel frame, under the corner cover.
2. When installing optional accessories, refer to thei r respective documentation.
3. Make sure the distance between the ceiling and the cassette does not exceed ·35·mm.
   The maximum ceiling opening is ·910·mm.
4. When the conditions in the ceiling exceed 30°C ambient temperature and 80% relative humidity, or when fresh air is inducted into the ceiling, additional insulation is required (polyethylene foam, thickness ≥·10·mm).
5. When installing a sensor kit, there will be a sensor on this location. For details, see the drawing of the sensor kit.
6. When installing a wireless controller, there will be a receiver on this location. For details, see the drawing of the wireless controller.

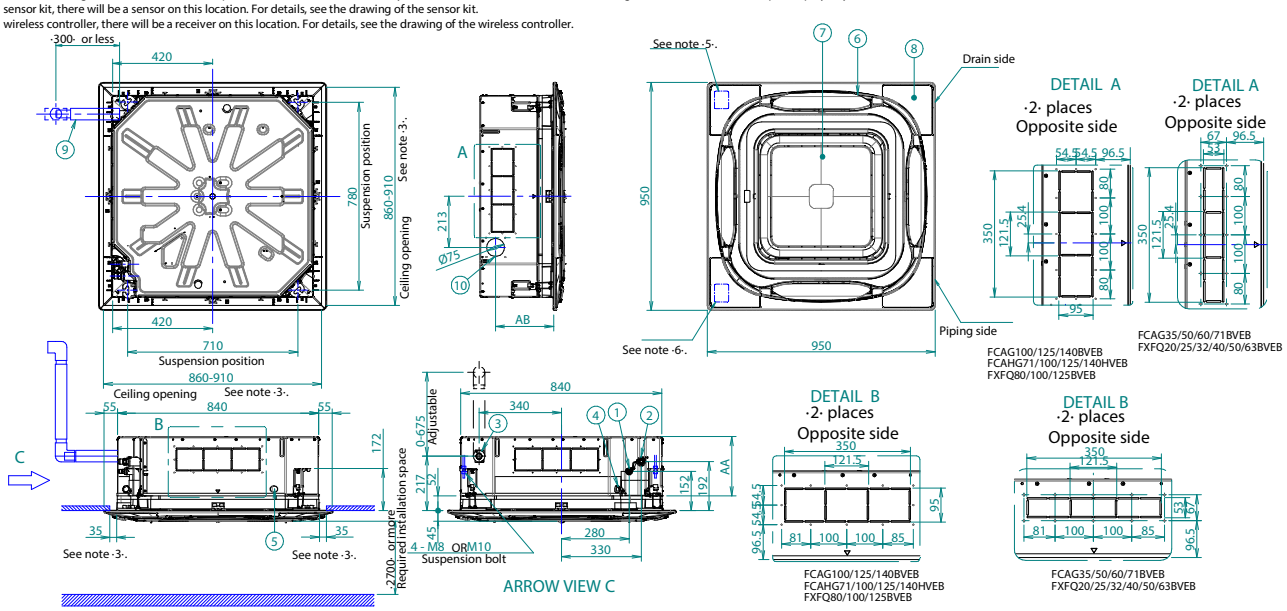

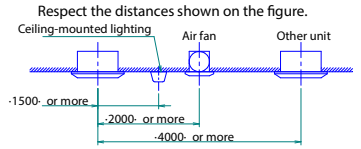

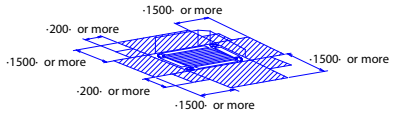

Required installation space

If a discharge outlet is closed up with the "sealing member" option kit, then the required installation space on that (closed up) side is ·500·mm instead of ·1500·mm.

Item Name

1. Liquid pipe connection port
2. Gas pipe connection port
3. Drain pipe connection
4. Power supply wiring intake
5. Transmission wiring intake hole
6. Air discharge outlet
7. Flat grille assembly
8. Corner decoration cover
9. Drain hose
10. Knockout hole.

FXFA-A WITH FRESH AIR INTAKE

AA	AB	Model name
264	306	FCAG35/50/60/71BVEB
		FXFQ20/25/32/40/50/63BVEB
306	348	FCAG100/125/140BVEB
		FXFQ80/100BVEB
348	390	FCAHG71/100/125/140HVEB
		FXFQ125BVEB

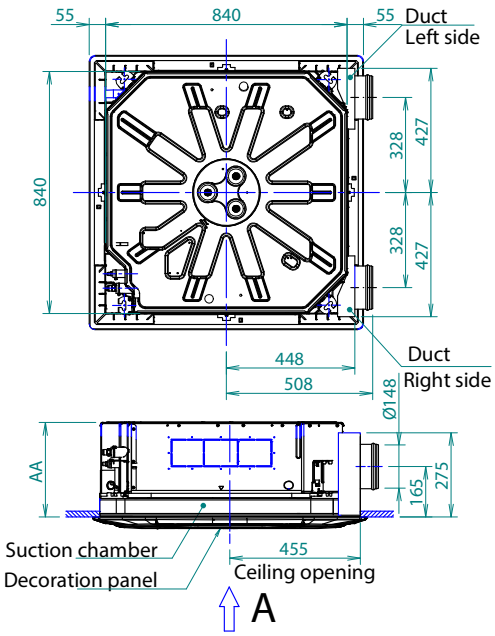

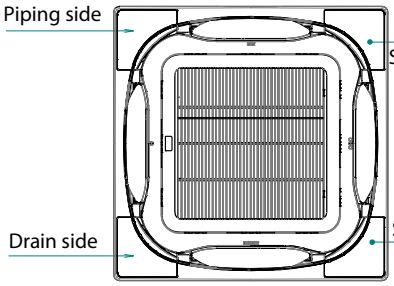

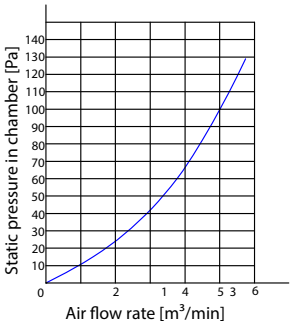

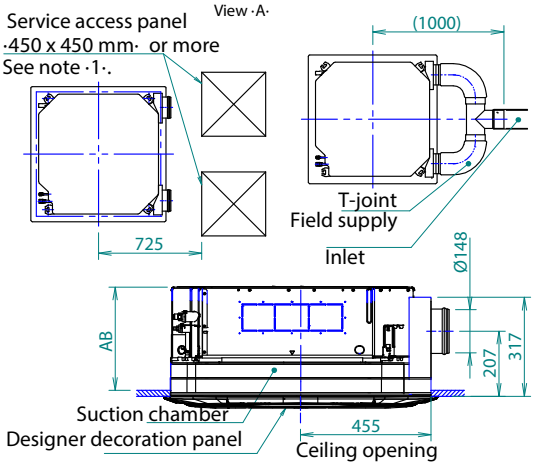

Notes

1. When installing a fresh air intake kit, provide a service access panel.
2. Field construction
3. This corner discharge outlet needs to be closed.
4. When installing a duct fan, use a wiring adapter to link the duct fan to the fan of the indoor unit.
5. The intake air flow rate is recommended to be ≤20% of the air flow rate at high fan speed.
   If the intake air flow rate is too large, the operating sound may increase, and the detection of the indoor unit suction temperature may be affected.
6. This indicates the distance between the T-joint inlet and the indoor unit inlet when the T-tube is connected.

FXZA-A

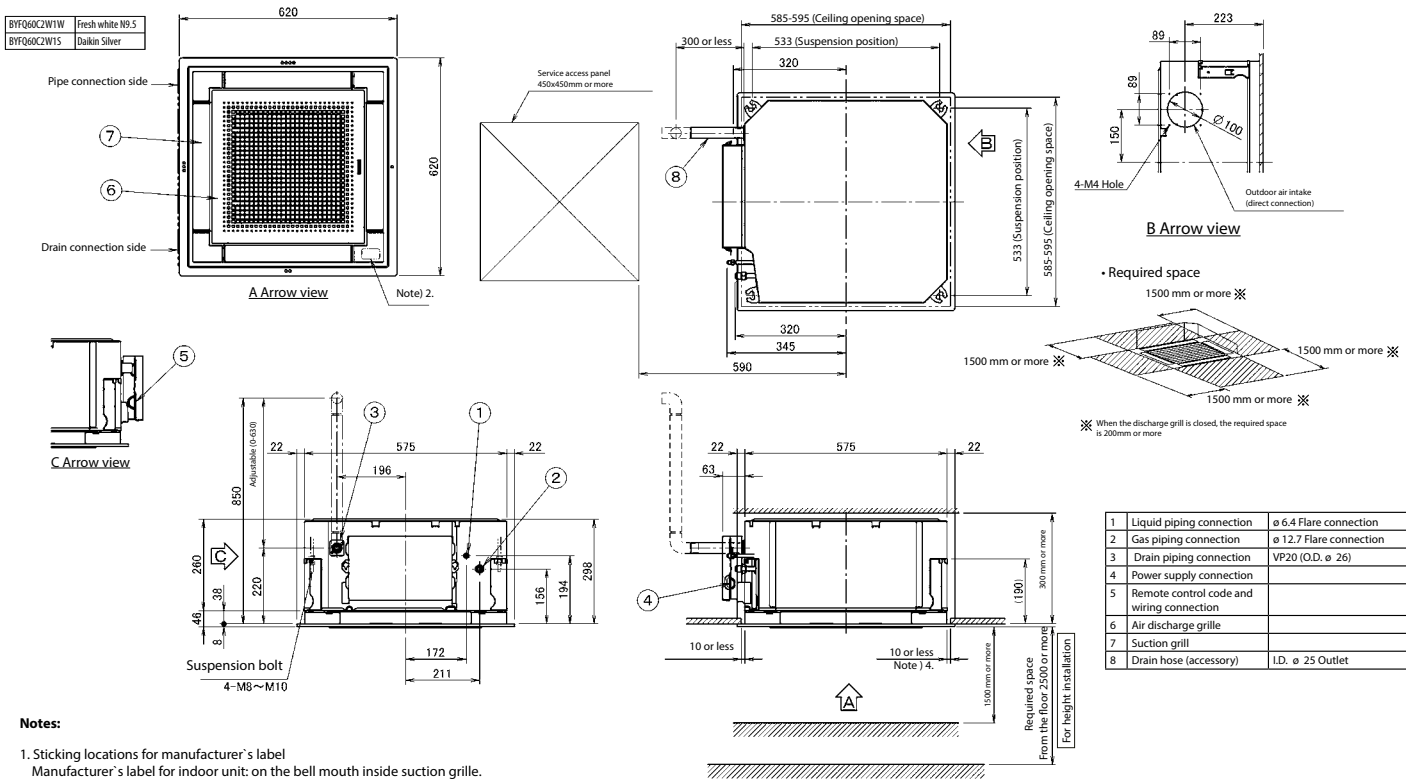

1	Liquid piping connection	ø 6.4 Flare connection
2	Gas piping connection	ø 12.7 Flare connection
3	Drain piping connection	VP20 (O.D. ø 26)
4	Power supply connection	
5	Remote control code and wiring connection	
6	Air discharge grille	
7	Suction grill	
8	Drain hose (accessory)	I.D. ø 25 Outlet

Notes:

1. Sticking locations for manufacturer`s label
   Manufacturer`s label for indoor unit: on the bell mouth inside suction grille.
   Manufacturer`s label for decoration panel: on the inner frame inside suction grille.
2. In case of using infrared remote controller, this position will be a signal receiver. Refer tot the drawing of infrared remote controller in detail.
3. When the temperature and humidity in the ceiling exceed 30ºC and RH 80%, or the fresh air is inducted into the ceiling or the unit continues 24 hour operation, an additional insulation (thickness 10mm or more, Glasswool or polyethylene foam) is required.
4. Though the installation is acceptable up to maximum of 595mm square ceiling opening, keep the clearance of 10mm or less between the main unit and the ceiling opening so that the panel overlap allowance can be ensured.

FXZA-A

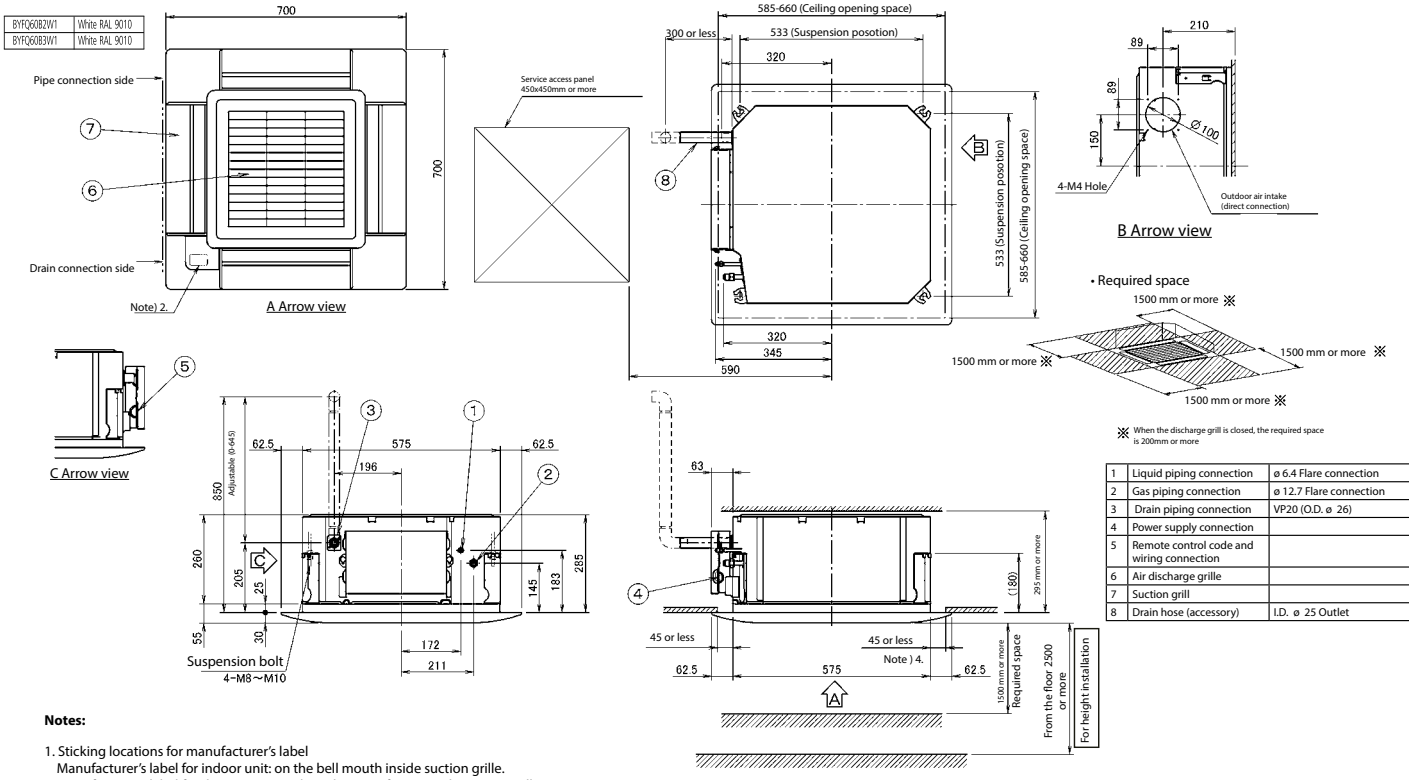

1	Liquid piping connection	ø 6.4 Flare connection
2	Gas piping connection	ø 12.7 Flare connection
3	Drain piping connection	VP20 (O.D. ø 26)
4	Power supply connection	
5	Remote control code and wiring connection	
6	Air discharge grille	
7	Suction grill	
8	Drain hose (accessory)	I.D. ø 25 Outlet

Notes:

1. Sticking locations for manufacturer's label
   Manufacturer's label for indoor unit: on the bell mouth inside suction grille.
   Manufacturer's label for decoration panel: on the inner frame inside suction grille.
2. In case of using infrared remote controller, this position will be a signal receiver. Refer tot the drawing of infrared remote controller in detail.
3. When the temperature and humidity in the ceiling exceed 30ºC and RH 80%, or the fresh air is inducted into the ceiling or the unit continues 24 hour operation, an additional insulation (thickness 10mm or more, Glasswool or polyethylene foam) is required.
4. Though the installation is acceptable up to maximum of 660mm square ceiling opening, keep the clearance of 45 mm or less between the main unit and the ceiling opening so that the panel overlap allowance can be ensured.

FXDA10-32A

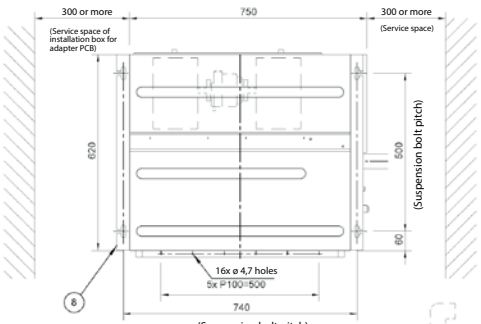

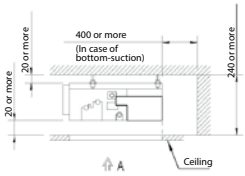

Service space

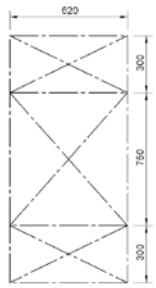

View A
Inspection door (ceiling opening)

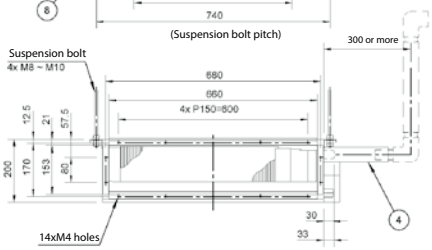

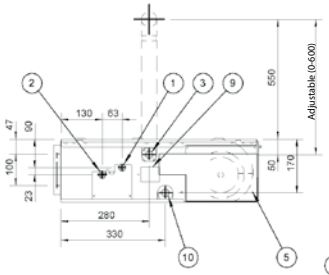

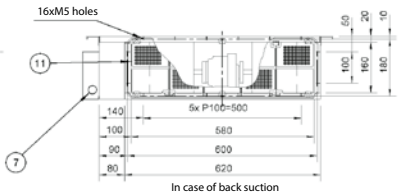

In case of back suction

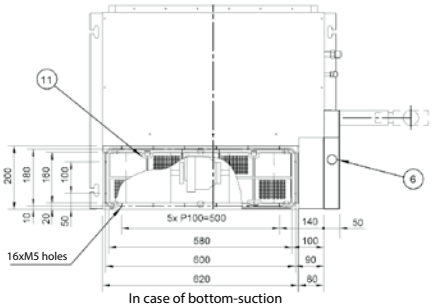

In case of bottom-suction

1	Liquid pipe connection	ø 6.4 Flare connection
2	Gas pipe connection	ø 12.7 Flare connection
3	Drain pipe connection	VP20 (O.D. ø 26, I.D. ø 20)
4	Drain hose (accesory)	ID ø 25 (Outlet)
5	control box	
6	Transmisiion wiring connection	
7	Power supply connection	
8	Suspension bracket	
9	Inspection cover	
10	Socket for drain	
11	Air filter (accessory)	

Notes:

1. In case of back-suction, mount chamber cover to botttom side of the unit.
   In case of bottom-suction, mount chamber cover to back side of the unit.
2. Locations of unit`s name plate: control box cover.
3. Mount the air filter at the suction side. (Use an air filter whose dust collecting efficiency is at least 50% in a gravimetric technique). It can not be equipped with air filter (accessory) when connecting duct to suction side.

FXDA40-50A

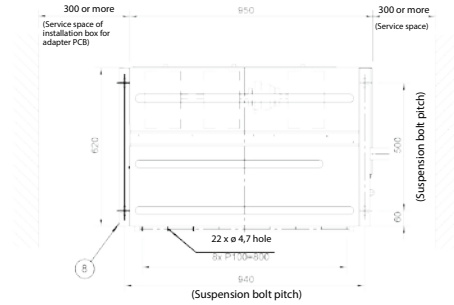

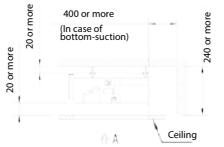

Service space

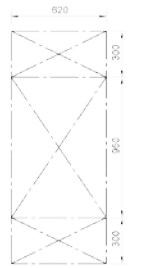

View A
Inspection door (ceiling opening)

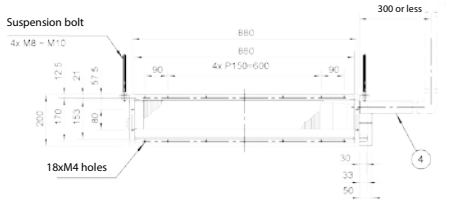

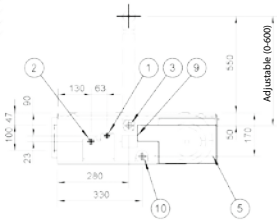

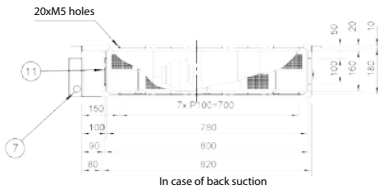

In case of back suction

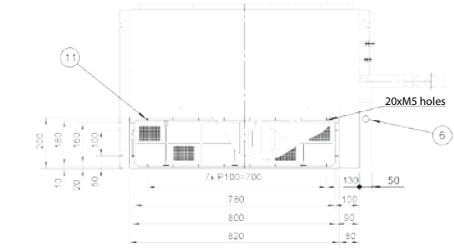

In case of bottom-suction

1	Liquid pipe connection	ø 6.4 Flare connection
2	Gas pipe connection	ø 12.7 Flare connection
3	Drain pipe connection	VP20 (O.D. ø 26, I.D. ø 20)
4	Drain hose (accesory)	ID ø 25 (Outlet)
5	control box	
6	Transmission wiring connection	
7	Power supply connection	
8	Suspension bracket	
9	Inspection cover	
10	Socket for drain	
11	Air filter (accessory)	

Notes:

1. In case of back-suction, mount chamber cover to botttom side of the unit.
   In case of bottom-suction, mount chamber cover to back side of the unit.
2. Locations of unit`s name plate: control box cover.
3. Mount the air filter at the suction side. (Use an air filter whose dust collecting efficiency is at least 50% in a gravimetric technique). It can not be equipped with air filter (accessory) when connecting duct to suction side.

FXDA63A

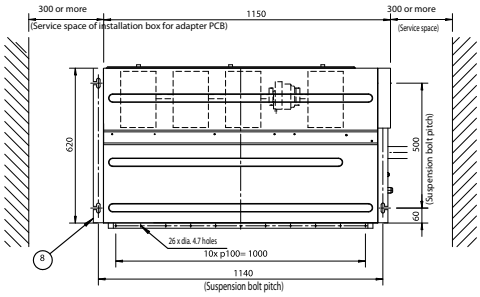

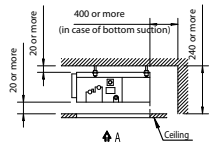

Service space

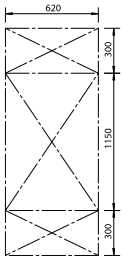

View A
Inspection door (ceiling opening)

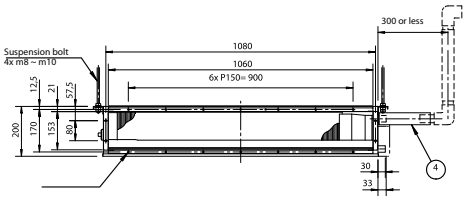

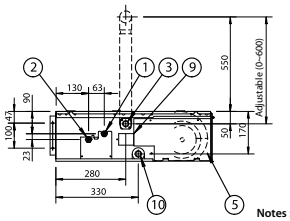

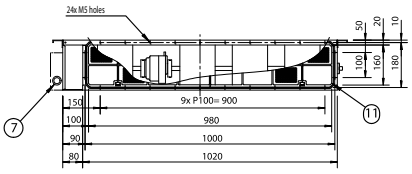

In case of back suction

Notes :

1. In case of back suction, mount chamber cover to bottom side of the unit.

   In case of bottom suction, mount chamber cover to back side of the unit.

2. Location of unit name plate: control box cover.

3. Mount the air filter at the suction side.
   (use an air filter whose dust collecting efficiency is at least 50%in a gravimetric technique).

   It can not be equipped with air filter (accessory) when connecting duct to suction side

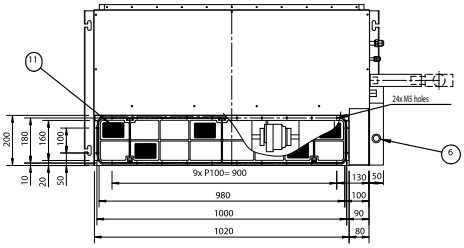

In case of bottom suction

Item	Name	Description
1	Liquid pipe connection	Dia.9.5 flare connection
2	Gas pipe connection	Dia.15.9 flare connection
3	Drain pipe connection	VP20 (OD dia.26, ID dia.20)
4	Drain hose (accessory)	ID dia.25 (outlet)
5	Control box	
6	Transmission wiring connection	
7	Power supply connection	
8	Suspension bracket	
9	Inspection cover	
10	Socket for drain	
11	Air filter (accessory)	

FXSA15-32A

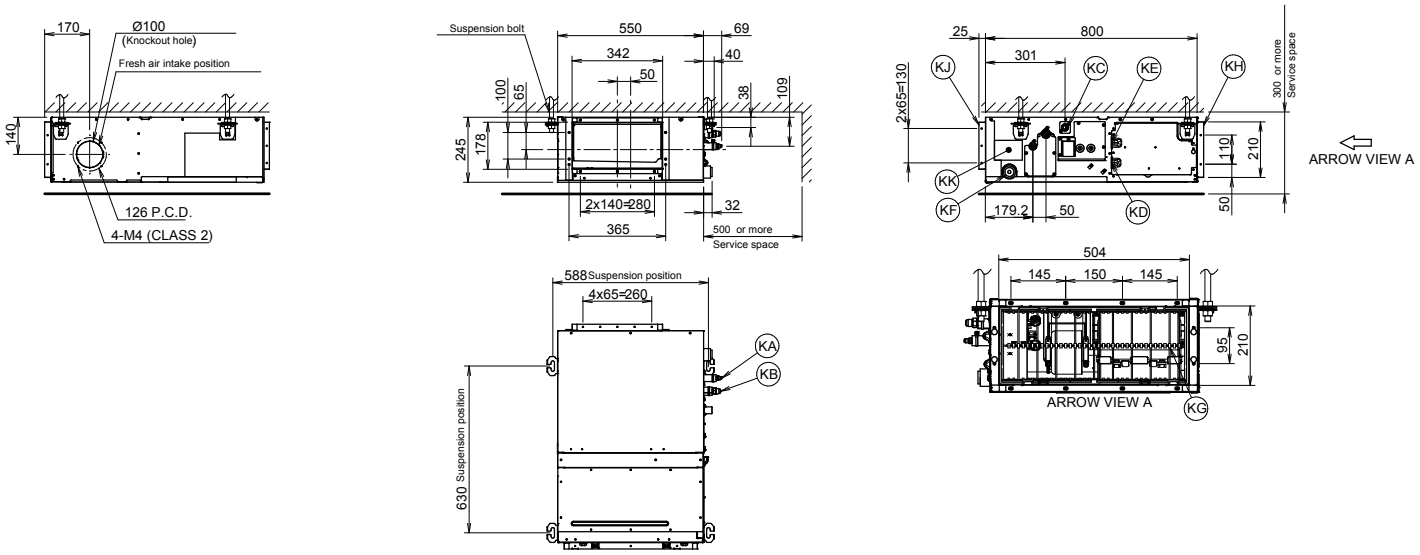

Item	Name	Description
KA	Liquid pipe connection port	Ø6.35 flared connection
KB	Gas pipe connection port	Ø12.70 flared connection
KC	Drain pipe connection	VP20 (OD Ø26, ID Ø20)
KD	Wiring connection	/
KE	Power supply connection	/
KF	Drain outlet	VP20 (OD Ø26, ID Ø20)
KG	Air filter	/
KH	Air suction side	/
KJ	Air discharge side	/
KK	Nameplate	/

Notes
1. When installing optional accessories, refer to their respective documentation.
2. The ceiling depth varies according to the documentation of the specific system.

FXSA40-50A

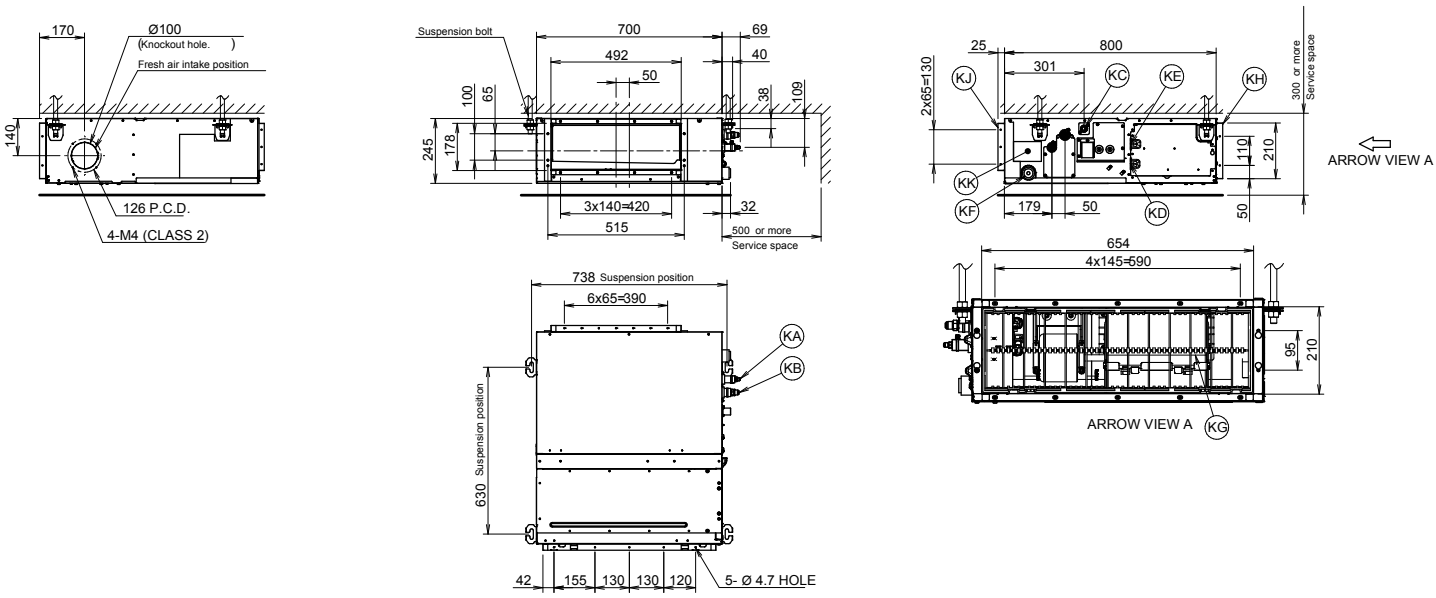

Item	Name	Description
KA	Liquid pipe connection port	Ø6.35 flared connection
KB	Gas pipe connection port	Ø12.70 flared connection
KC	Drain pipe connection	VP20 (OD Ø26, ID Ø20)
KD	Wiring connection	/
KE	Power supply connection	/
KF	Drain outlet	VP20 (OD Ø26, ID Ø20)
KG	Air filter	/
KH	Air suction side	/
KJ	Air discharge side	/
KK	Nameplate	/

Notes
1. When installing optional accessories, refer to their respective documentation.
2. The ceiling depth varies according to the documentation of the specific system.

FXSA63-80A

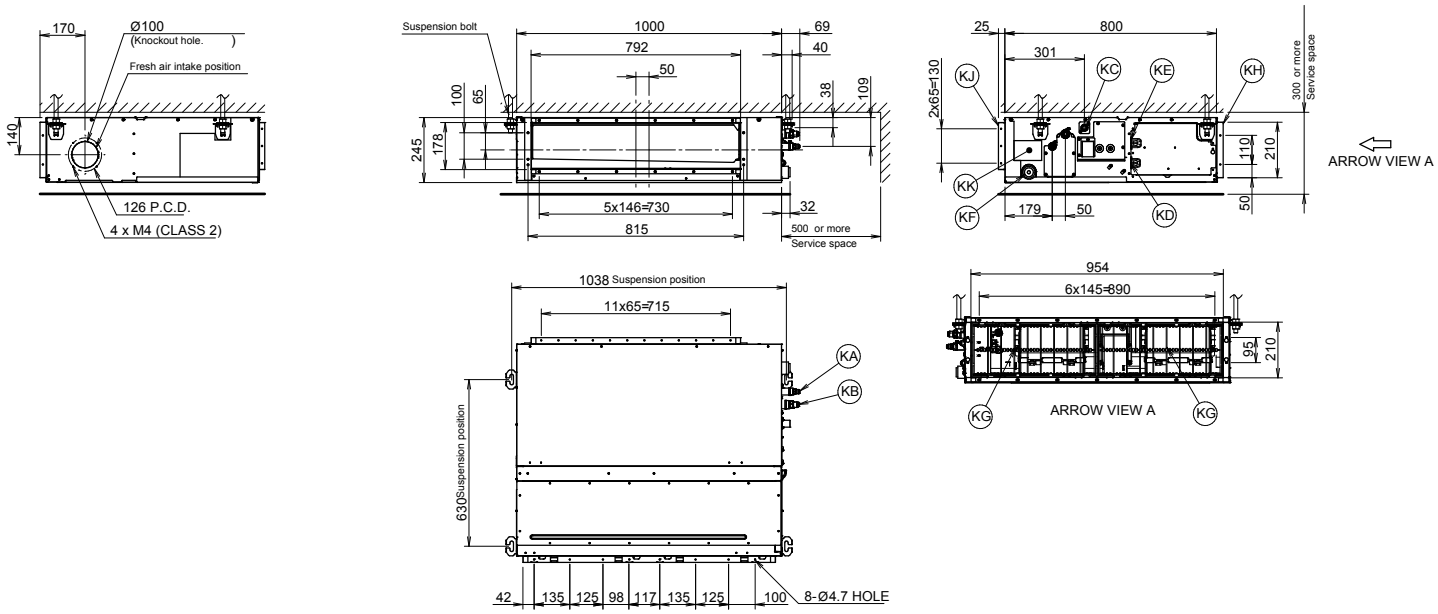

Item	Name	Description
KA	Liquid pipe connection port	Ø9.52 flared connection
KB	Gas pipe connection port	Ø15.90 flared connection
KC	Drain pipe connection	VP20 (OD Ø26, ID Ø20)
KD	Wiring connection	/
KE	Power supply connection	/
KF	Drain outlet	VP20 (OD Ø26, ID Ø20)
KG	Air filter	/
KH	Air suction side	/
KJ	Air discharge side	/
KK	Nameplate	/

Notes

1. When installing optional accessories, refer to their respective documentation.
2. The ceiling depth varies according to the documentation of the specific system.

FXSA100-125A

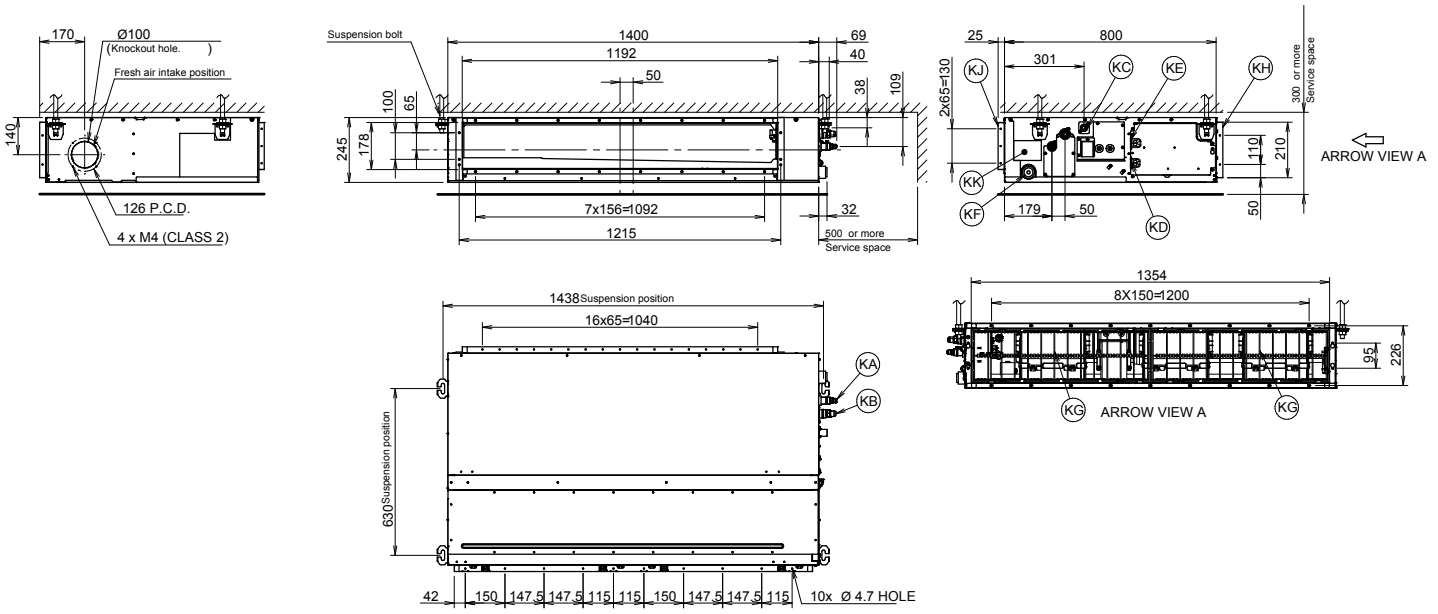

Item	Name	Description
KA	Liquid pipe connection port	Ø9.52 flared connection
KB	Gas pipe connection port	Ø15.90 flared connection
KC	Drain pipe connection	VP20 (OD Ø26, ID Ø20)
KD	Wiring connection	/
KE	Power supply connection	/
KF	Drain outlet	VP20 (OD Ø26, ID Ø20)
KG	Air filter	/
KH	Air suction side	/
KJ	Air discharge side	/
KK	Nameplate	/

Notes

1. When installing optional accessories, refer to their respective documentation.
2. The ceiling depth varies according to the documentation of the specific system.

FXSA140A

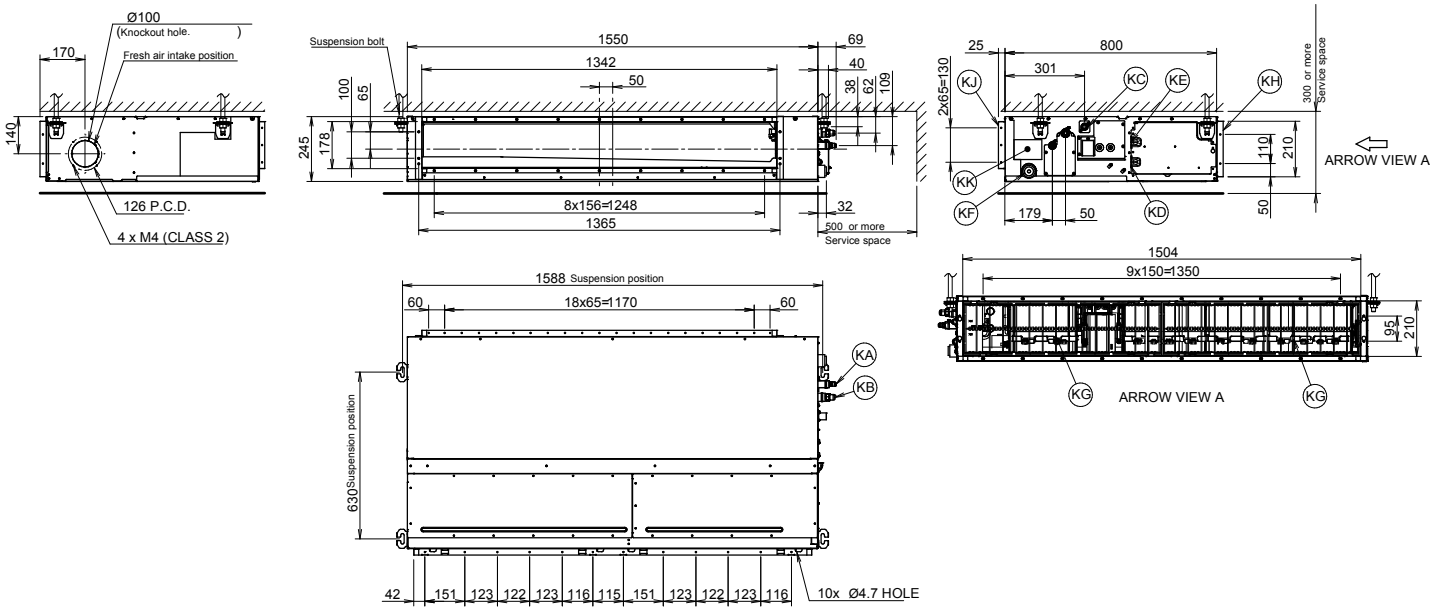

Item	Name	Description
KA	Liquid pipe connection port	Ø9.52 flared connection
KB	Gas pipe connection port	Ø15.90 flared connection
KC	Drain pipe connection	VP20 (OD Ø26, ID Ø20)
KD	Wiring connection	/
KE	Power supply connection	/
KF	Drain outlet	VP20 (OD Ø26, ID Ø20)
KG	Air filter	/
KH	Air suction side	/
KJ	Air discharge side	/
KK	Nameplate	/

Notes

1. When installing optional accessories, refer to their respective documentation.
2. The ceiling depth varies according to the documentation of the specific system.

FXAA15-32A

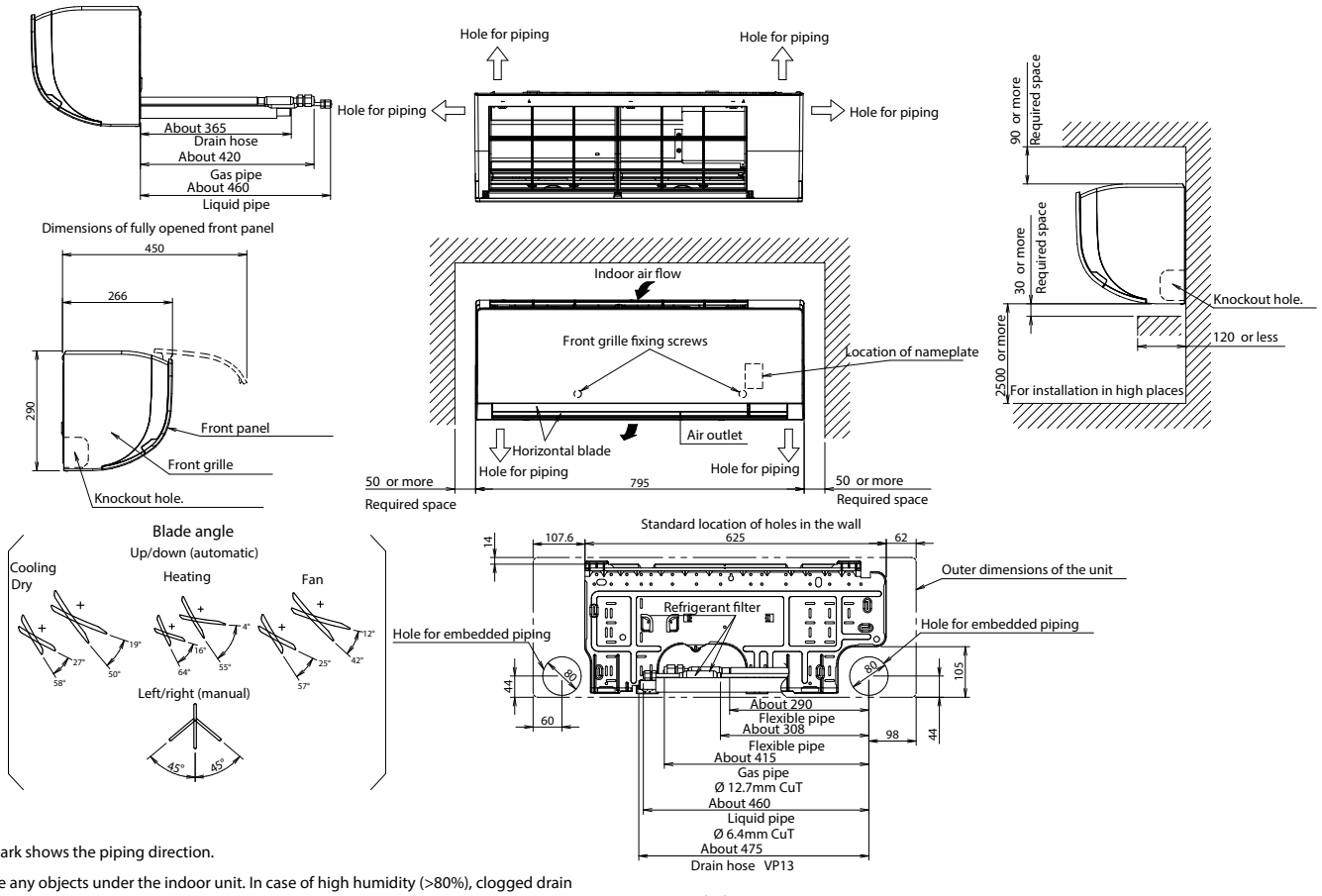

Notes

1) The ⇨ mark shows the piping direction.

2) Do not place any objects under the indoor unit. In case of high humidity (>80%), clogged drain outlets, or dirty air filters, condensate may drop out.

Inside diameter: 15mm

Outside diameter: 18mm

FXAA40-50A

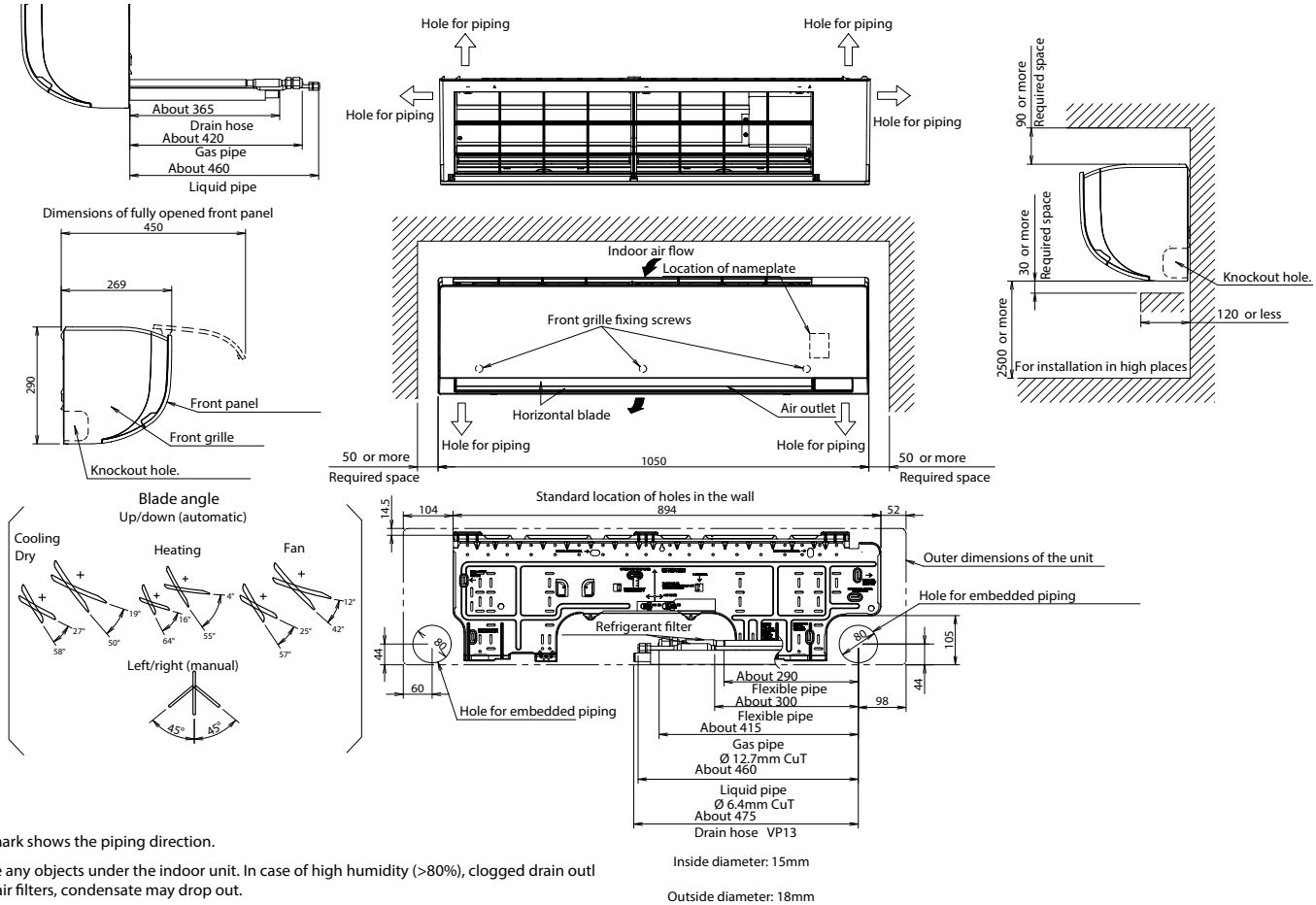

Notes

1) The ⇨ mark shows the piping direction.

2) Do not place any objects under the indoor unit. In case of high humidity (>80%), clogged drain outl ets, or dirty air filters, condensate may drop out.

Inside diameter: 15mm

Outside diameter: 18mm

FXAA63A

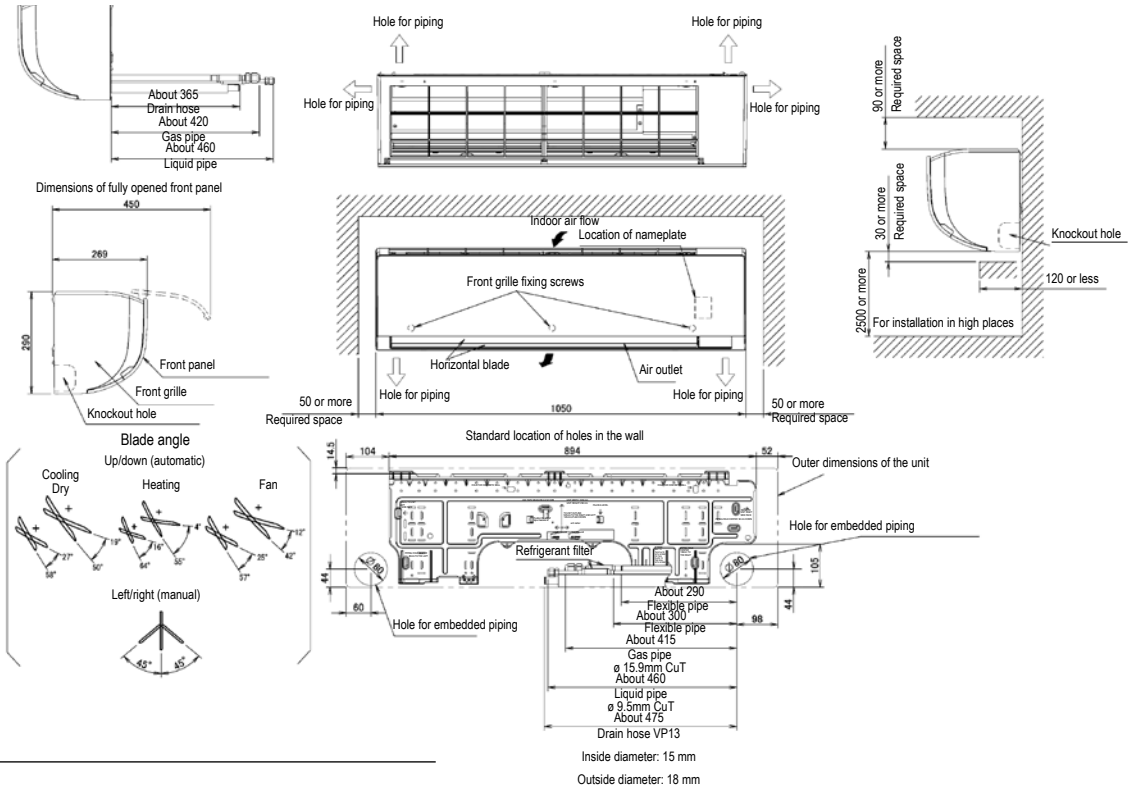

NOTES

1. The mark ⇨ shows the piping direction.
2. Do not place any objects under the indoor unit. In case of high humidity (>80%), clogged drain outlets or dirty air filters, condensate may drop out.

Notes

Creating a sustainable future together

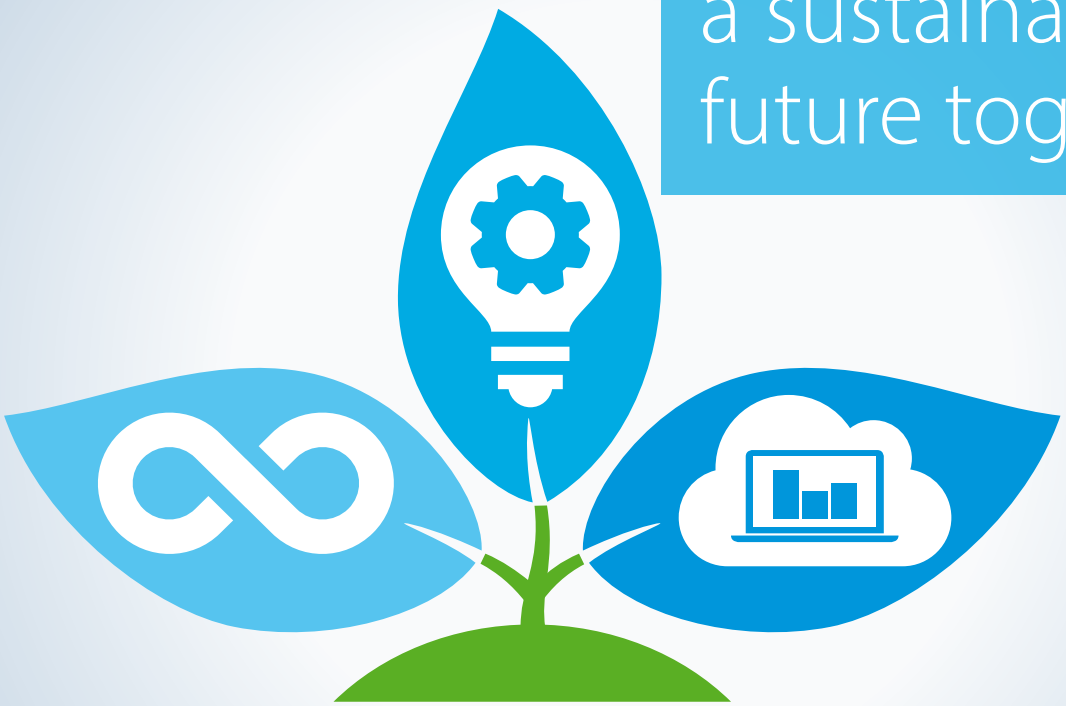

Determined to reduce our environmental footprint, we aim to be CO_2-neutral by 2050.
A circular economy, innovation and smart use – these are the stepping stones on our path.
The time to act is now. Join us in creating a sustainable future for HVAC-R.

Sowing the seeds of climate protection with Daikin

Through a circular economy

- Embrace Certified Reclaimed Refrigerant Allocation to reuse more refrigerant
- Increase recovered refrigerant returns
- Reuse refrigerant for maintenance with our refrigerant recycling machine

Through innovation

- Equip our VRV 5 range with the lower GWP refrigerant R-32
- Offer high real-world seasonal efficiencies
- Deploy unique auto cleaning filters to maximise efficiency 24/7

Through smart use

- Rigorously follow up on energy consumption via the Daikin Cloud Service
- Factor in experts' advice to continuously optimise system efficiency
- Enable predictive maintenance to ensure optimum operation and uptime
- Prevent energy waste with smart key cards and sensors

www.daikin.eu/building-a-circular-economy

Daikin Europe N.V. Naamloze Vennootschap Zandvoordestraat 300 · 8400 Oostende · Belgium · www.daikin.eu · BE 0412 120 336 · RPR Oostende (Publisher)

FSC

ECPEN20-210B 06/2020

CERTIFIED ISO 9001 · ISO 14001

The present publication is drawn up by way of information only and does not constitute an offer binding upon Daikin Europe N.V. Daikin Europe N.V. has compiled the content of this publication to the best of its knowledge. No express or implied warranty is given for the completeness, accuracy, reliability or fitness for particular purpose of its content and the products and services presented therein. Specifications are subject to change without prior notice. Daikin Europe N.V. explicitly rejects any liability for any direct or indirect damage, in the broadest sense, arising from or related to the use and/or interpretation of this publication. All content is copyrighted by Daikin Europe N.V.

Printed on non-chlorinated paper. Prepared by La Movida.